ASSEMBLY OF BACI10AL, BACI10AM, AND BACI10AP RECTANGULAR CONNECTOR INSERTS

Paragraph		Page
1.	GENERAL DATA	1
A.	Damage Conditions - Rear Face of the Insert	1
B.	Damage Conditions - Front Face of the Insert	1
C.	Minimum Wire O.D. for an Environmentally Sealed Connector	2
2.	PART NUMBERS AND DESCRIPTION	3
A.	Connector Insert Part Numbers	3
B.	Size 2222, 2020, 1616, 1212, 0808, and 0505 Contact Part Numbers	4
C.	Size 5 and Size 8 Coax Contact Part Numbers	7
D.	Size 8 Twinax Contact Part Numbers	8
E.	Size 8 Quadrax Contacts	9
F.	Fiber Optic Contact Terminus Part Numbers	11
G.	Fiber Optic Alignment Sleeve Insert Part Numbers	12
3.	INSERT CONFIGURATIONS	13
A.	BACI10AL Inserts	13
B.	BACI10AM Inserts	20
C.	BACI10AP Inserts	21
4.	CONNECTOR INSERT DISASSEMBLY	23
A.	Seal Plug and Seal Rod Removal	23
B.	Contact Removal	24
C.	Removal of Size 5 Coax and Size 0508 or 0505 Power Contacts	26
D.	Removal of Fiber Optic Contact Termini	27
E.	Removal of the Fiber Optic Alignment Sleeve Insert	28
5.	CONNECTOR INSERT ASSEMBLY	29
A.	Cable Preparation for Shield Termination in the Connector Insert - Standard Configuration	29
B.	Cable Preparation for Shield Termination in the Connector Insert - End Strip Configuration	30
C.	Cable Preparation for Shield Termination in the Connector Insert - Connector Without a Backshell	31
D.	Contact Assembly	33
E.	Wire Preparation - Increase of the O.D. of the Wire - Unshielded Wire	40
F.	Wire Preparation - Increase of the O.D. of the Wire - Shielded Wire	41
G.	Wire Preparation - Decrease of the O.D. of the Wire	42
H.	Assembly of EPXB Contacts	43
I.	Assembly of Size 0505 or 0508 Power Contacts	44
J.	Assembly of Size 5 Coax Contacts	49
K.	Assembly of S280W554-111 and S280W554-113 Size 8 Coax Contacts	54
L.	Assembly of Tyco 1757624-1 and 1883369-2 Size 8 Coax Contacts to BMS 13-65 Type 0F Coax Cable	58

20-74-02 CONTENTS

BOEING PROPRIETARY - Copyright © Unpublished Work - See title page for details

For training purposes only!

ASSEMBLY OF BACI10AL, BACI10AM, AND BACI10AP RECTANGULAR CONNECTOR INSERTS

Paragraph		Page
5.	**CONNECTOR INSERT ASSEMBLY (continued)**	
M.	Twinax Cable Preparation and Contact Assembly	61
N.	Assembly of Size 8 BACC47GA1 and BACC47GB1 Quadrax Contacts	68
O.	Contact Insertion	73
P.	Installation of Size 5 Coax and Size 0508 or 0505 Power Contacts	75
Q.	Installation of Size 8 Coax, Size 8 Twinax, and Size 0808 Power Contacts	76
R.	Installation of Size 8 Quadrax Contacts	77
S.	Insertion of Fiber Optic Contact Termini	79
T.	Installation of the Fiber Optic Alignment Sleeve Insert	79
U.	Seal of an Empty Contact Cavity	80
6.	**INSPECTION AND CLEANING OF A FIBER OPTIC ALIGNMENT SLEEVE INSERT**	**81**
A.	Necessary Tools and Materials	81
B.	Inspection and Cleaning	81
C.	Contamination Removal - Without Solvent	82
D.	Contamination Removal - With Solvent	82
7.	**APPROVED TOOL SUPPLIERS**	**83**
A.	Contact Removal Tools	83
B.	Contact Crimp Tools	84
C.	Contact Insertion Tools	85

For training pursposes only!

20-74-02 CONTENTS

BOEING PROPRIETARY - Copyright © Unpublished Work - See title page for details

ASSEMBLY OF BACI10AL, BACI10AM, AND BACI10AP RECTANGULAR CONNECTOR INSERTS

1. GENERAL DATA

A. Damage Conditions - Rear Face of the Insert

The insert must be replaced when one or more of these conditions occur:

- The depth of the damage extends farther than the bottom of the outer seal web; refer to Figure 1
- The damage extends from one contact cavity to a different contact cavity; refer to Figure 2.

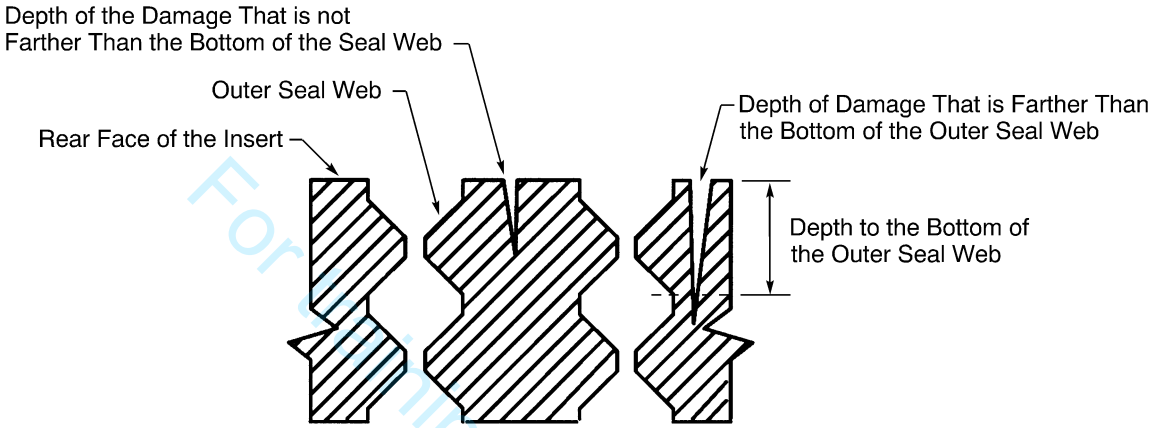

REAR FACE OF THE INSERT - DEPTH OF DAMAGE
Figure 1

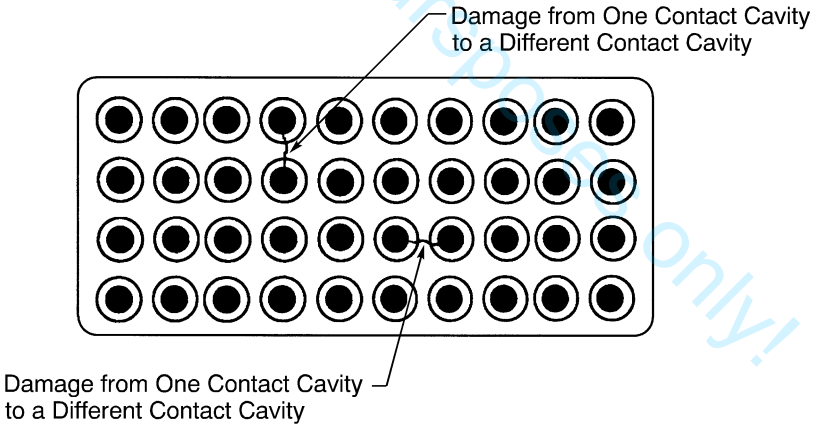

REAR FACE OF THE INSERT - LENGTH OF DAMAGE
Figure 2

B. Damage Conditions - Front Face of the Insert

Refer to Figure 3.

The insert for pin contacts must be replaced when one or more of these conditions occur:

- The damage extends from one contact cavity to a different contact cavity
- The damage extends from one contact cavity to the outer edge of the insert.

For training purposes only!

BOEING PROPRIETARY - Copyright © Unpublished Work - See title page for details

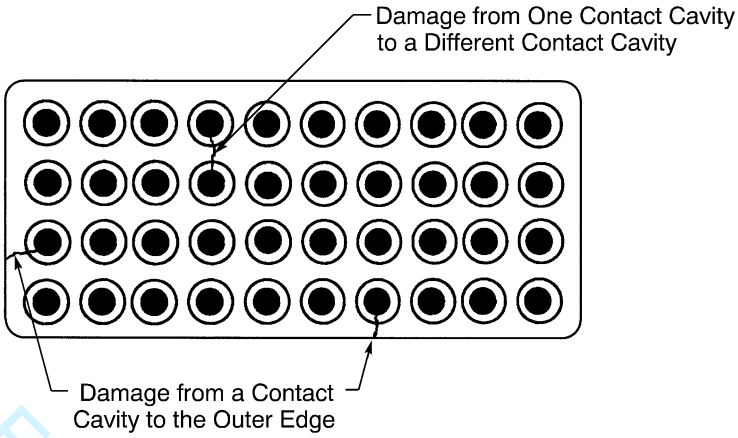

FRONT FACE OF THE INSERT - LENGTH OF DAMAGE
Figure 3

For training purposes only

C. Minimum Wire O.D. for an Environmentally Sealed Connector

Refer to:

- Subject 20-60-08 for the identification of an environmentally sealed connector
- Table 1 for the minimum wire O.D. that is necessary for a satisfactory seal of a contact cavity hole
- Subject 20-60-08 for the procedure to increase the diameter of the wire.

Table 1
MINIMUM WIRE O.D. FOR A SATISFACTORY SEAL

Connector Insert	Description	Contact Cavity Size	Minimum Wire O.D. (inch)
BACI10AL	Rear release, rear removal contacts	20	0.040
		16	0.068
		12	0.097
BACI10AM	Rear release, rear removal contacts	20	0.040
		16	0.068
		12	0.097
BACI10AP	Rear release, rear removal contacts	20	0.040
		16	0.068
		12	0.097

BOEING PROPRIETARY - Copyright © Unpublished Work - See title page for details

ASSEMBLY OF BACI10AL, BACI10AM, AND BACI10AP RECTANGULAR CONNECTOR INSERTS

2. PART NUMBERS AND DESCRIPTION

A. Connector Insert Part Numbers

Table 2
CONNECTOR INSERT PART NUMBERS

Part Number	Size	Configuration	Reference	Supplier
617802259	-	-	-	RadiaII
617802260	-	-	-	RadiaII
BACI10AL()A()	2	Standard	Figure 4	RadiaII
BACI10AL00-N	2	Blank	Figure 4	RadiaII
BACI10AM()AP	2	Bussed	Figure 5	RadiaII
BACI10AP()A()	1	Standard	Figure 6	RadiaII
BACI10AP00-N	1	Blank	Figure 6	RadiaII
EPXBE	-	-	Figure 7	RadiaII

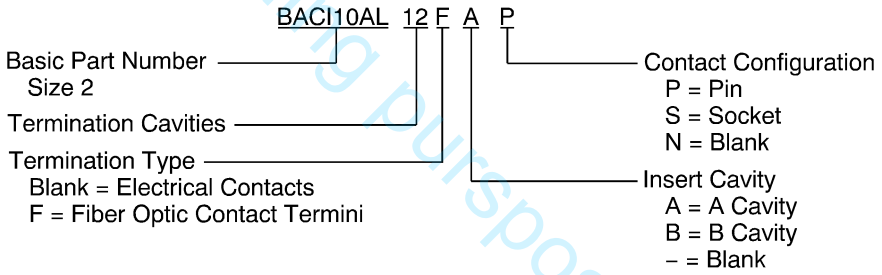

BACI10AL() INSERT PART NUMBER STRUCTURE
Figure 4

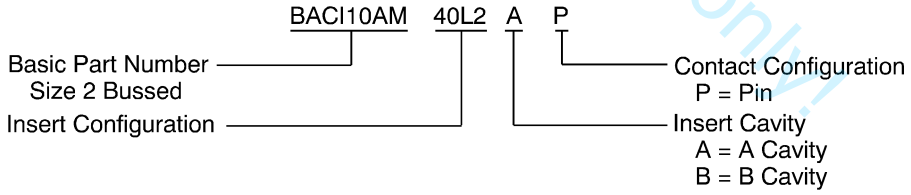

BACI10AM() BUSSED INSERT PART NUMBER STRUCTURE
Figure 5

For training purposes only!

BOEING PROPRIETARY - Copyright © Unpublished Work - See title page for details

ASSEMBLY OF BACI10AL, BACI10AM, AND BACI10AP RECTANGULAR CONNECTOR INSERTS

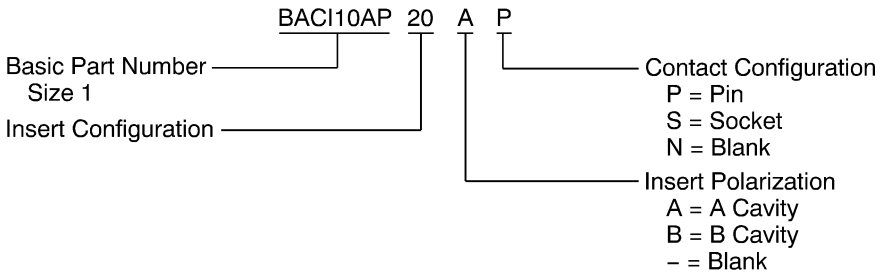

BACI10AP() INSERT PART NUMBER STRUCTURE
Figure 6

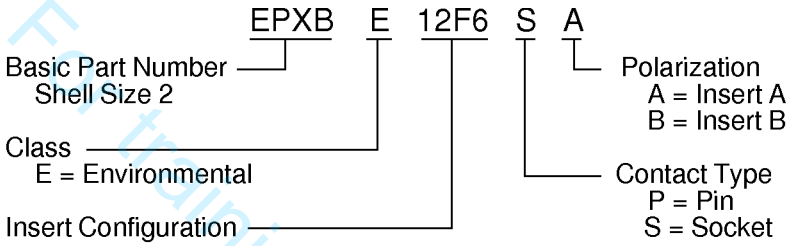

RADIALL EPXB INSERT PART NUMBER STRUCTURE
Figure 7

For training purposes only!

B. Size 2222, 2020, 1616, 1212, 0808, and 0505 Contact Part Numbers

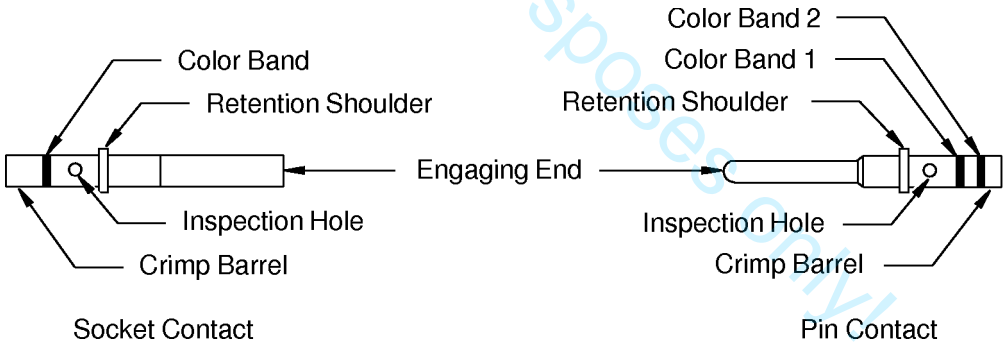

REAR RELEASE INSERT CONTACTS
Figure 8

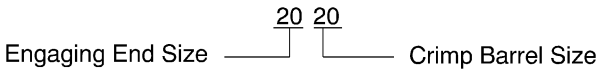

EXAMPLE OF A CONTACT SIZE
Figure 9

BOEING PROPRIETARY - Copyright © Unpublished Work - See title page for details

ASSEMBLY OF BACI10AL, BACI10AM, AND BACI10AP RECTANGULAR CONNECTOR INSERTS

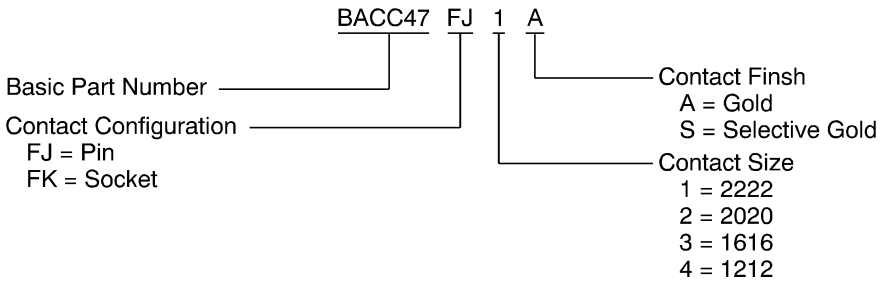

BACC47FJ and BACC47FK CONTACT PART NUMBER STRUCTURE
Figure 10

Table 3
STANDARD CONTACTS FOR BACI10AL, BACI10AM, AND BACI10AP INSERTS

Contact Size	Engaging End Size	Crimp Barrel Size	Type	Color Code		Boeing Standard
				Color	Band	
2222	22	22	Pin	Green	1	BACC47FJ1A
						BACC47FJ1S
			Socket			BACC47FK1A
						BACC47FK1S
2020	20	20	Pin	Red	1	BACC47FJ2A
					2	
					1	BACC47FJ2S
					2	
			Socket	Red	1	BACC47FK2A
						BACC47FK2S
1616	16	16	Pin	Blue	1	BACC47FJ3A
						BACC47FJ3S
			Socket			BACC47FK3A
						BACC47FK3S
1212	12	12	Pin	Yellow	1	BACC47FJ4A
						BACC47FJ4S
			Socket			BACC47FK4A
						BACC47FK4S

For training purposes only!

BOEING PROPRIETARY - Copyright © Unpublished Work - See title page for details

ASSEMBLY OF BACI10AL, BACI10AM, AND BACI10AP RECTANGULAR CONNECTOR INSERTS

Table 4
POWER CONTACTS FOR BACI10AL, BACI10AM, AND BACI10AP INSERTS

Contact Size	Engaging End Size	Crimp Barrel Size	Wire Size (AWG)	Type	Part Number	Suppler
0808	08	08	8	Pin	617291002	Radiall
				Socket	617391002	Radiall
0505	05	05	8	Pin	617280001	Radiall
				Socket	617380001	Radiall

NOTE: The contact size previously referred to as 0508 is now referred to as 0505.

NOTE: The largest wire that can be terminated in the size 05 crimp barrel is AWG 8.

Table 5
SUPPLIER PART NUMBERS FOR BOEING STANDARD CONTACTS

Specified Contact	Alternative Contact	
	Part Number	Supplier
BACC47FJ1A	617200002	Radiall
BACC47FK1A	617300002	Radiall
BACC47FJ2A	617221001	Radiall
BACC47FK2A	617320001	Radiall
BACC47FJ3A	617240001	Radiall
BACC47FK3A	617340001	Radiall
BACC47FJ4A	617250001	Radiall
BACC47FK4A	617350001	Radiall

Table 6
APPROVED SUPPLIERS OF BOEING STANDARD CONTACTS

Contact	Supplier
BACC47FJ()	Radiall
BACC47FK()	Radiall

Table 7
EPXB STANDARD CONTACT PART NUMBERS

Contact Size	Engaging End Size	Crimp Barrel Size	Contact Type	Part Number	Supplier
1616	16	16	Pin	617235001	Radiall
			Pin	670235	Radiall
			Socket	670335	Radiall

For training purposes only!

BOEING PROPRIETARY - Copyright © Unpublished Work - See title page for details

ASSEMBLY OF BACI10AL, BACI10AM, AND BACI10AP RECTANGULAR CONNECTOR INSERTS

C. Size 5 and Size 8 Coax Contact Part Numbers

Table 8
COAX CONTACT PART NUMBERS

Coax Contact			Coax Cable
Size	Type	Boeing Standard or Part Number	
5	Pin	BACC47FT0F	BMS 13-65 Type 0F
		BACC47FT0G	BMS 13-65 Type 0G
	Socket	BACC47FU0F	BMS 13-65 Type 0F
		BACC47FU0G	BMS 13-65 Type 0G
8	Pin	1757624-1	BMS 13-65 Type 0F
	Socket	1883369-2	BMS 13-65 Type 0F
		S280W554-111	S280W503-1
			BMS 13-65 Type 0E
		S280W554-113	S280W503-2
			BMS 13-65 Type 0F

NOTE: The coax pin contact has an outer pin contact and an inner socket contact.

NOTE: The coax socket contact has an outer socket contact and an inner pin contact.

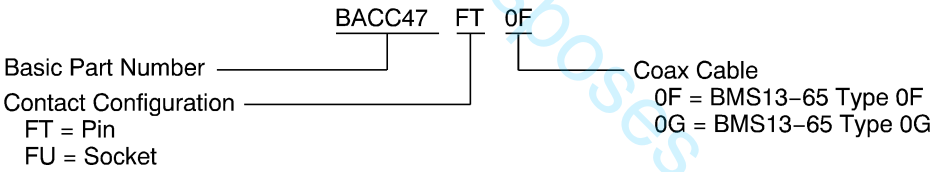

SIZE 5 COAX CONTACT PART NUMBER STRUCTURE
Figure 11

SIZE 5 COAX CONTACTS
Figure 12

For training purposes only!

BOEING PROPRIETARY - Copyright © Unpublished Work - See title page for details

ASSEMBLY OF BACI10AL, BACI10AM, AND BACI10AP RECTANGULAR CONNECTOR INSERTS

Table 9
APPROVED SUPPLIERS OF BOEING STANDARD COAX CONTACTS

Size	Coax Contact	Supplier
5	BACC47FT()	RadiaII
	BACC47FU()	RadiaII
8	S280W554-111	ITT Cannon
	S280W554-113	ITT Cannon
	1757624-1	Tyco
	1883369-2	Tyco

Table 10
ALTERNATIVE PART NUMBERS FOR SIZE 8 COAX CONTACTS

Boeing Standard	Contact	
	Part Number	Supplier
S280W554-111	349-1087-003	ITT Cannon
S280W554-113	349-1087-004	ITT Cannon

For training purposes only!

D. Size 8 Twinax Contact Part Numbers

Table 11
BOEING STANDARD SIZE 8 TWINAX CONTACTS

Contact Size	Type	Retention	Boeing Standard	Color Code	
				Band	Color
8	Socket	Rear Release, Rear Removal	S280W552-105	1	Blue
				2	-
			S280W552-205	1	Blue
				2	Blue

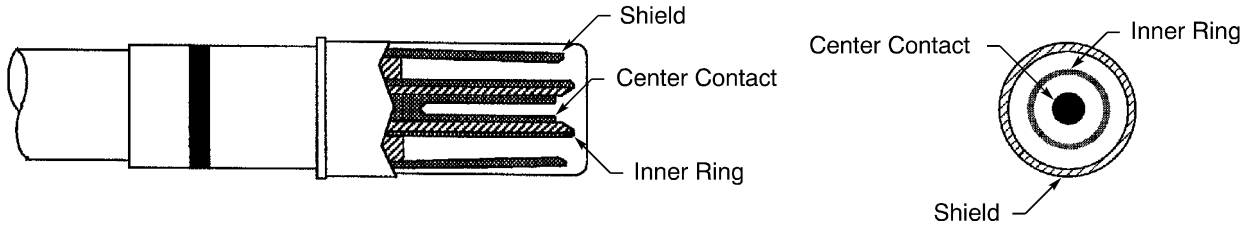

TWINAX CONTACT ELECTRICAL COMPONENTS
Figure 13

BOEING PROPRIETARY - Copyright © Unpublished Work - See title page for details

ASSEMBLY OF BACI10AL, BACI10AM, AND BACI10AP RECTANGULAR CONNECTOR INSERTS

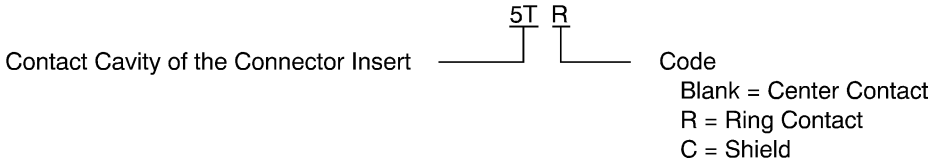

TWINAX CONTACT TERMINATION IDENTIFICATION
Figure 14

Table 12
SIZE 8 TWINAX CONTACT TERMINATION IDENTIFICATION

Twinax Cable Component	Twinax Contact Termination Component	Code	Reference
Blue Wire	Center Contact	Blank	Figure 13
			Figure 14
White Wire	Inner Ring	R	Figure 13
			Figure 14
Shield	Outer Contact Body	C	Figure 13
			Figure 14

Table 13
ALTERNATIVE PART NUMBERS FOR SIZE 8 TWINAX CONTACTS

Specified Contact	Alternative Contact
S280W552-105	S280W552-205

Table 14
SUPPLIER PART NUMBERS FOR BOEING STANDARD SIZE 8 TWINAX CONTACTS

Boeing Standard	Alternative Contact	
	Part Number	Supplier
S280W552-205	349-1081-001	ITT Cannon
	318-L8T2-614	Tri-Star

E. Size 8 Quadrax Contacts

Table 15
BOEING STANDARD SIZE 8 QUADRAX CONTACTS

Contact Size	Type	Boeing Standard	Reference
8	Pin	BACC47GA1	Figure 15
8	Socket	BACC47GB1	Figure 16

For training purposes only!

BOEING PROPRIETARY - Copyright © Unpublished Work - See title page for details

ASSEMBLY OF BACI10AL, BACI10AM, AND BACI10AP RECTANGULAR CONNECTOR INSERTS

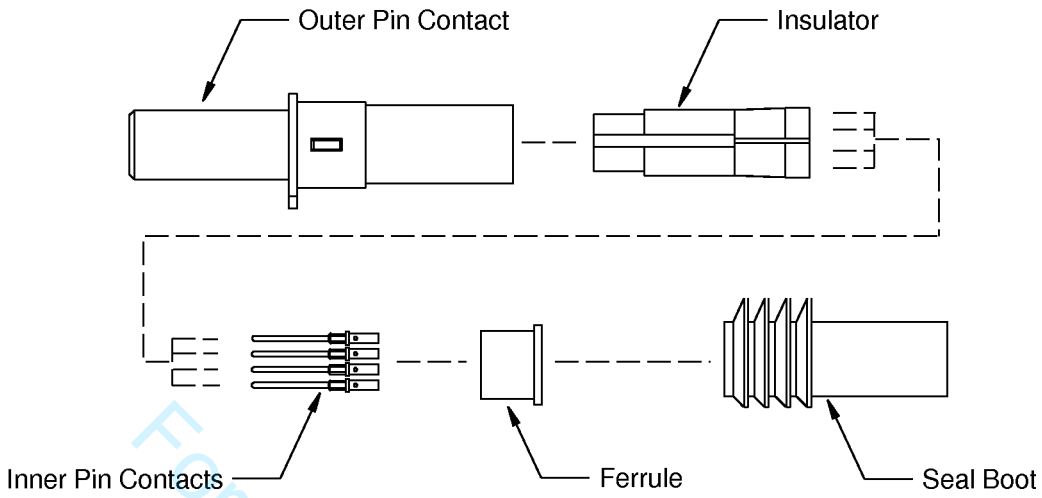

COMPONENTS SUPPLIED WITH THE BACC47GA QUADRAX PIN CONTACT
Figure 15

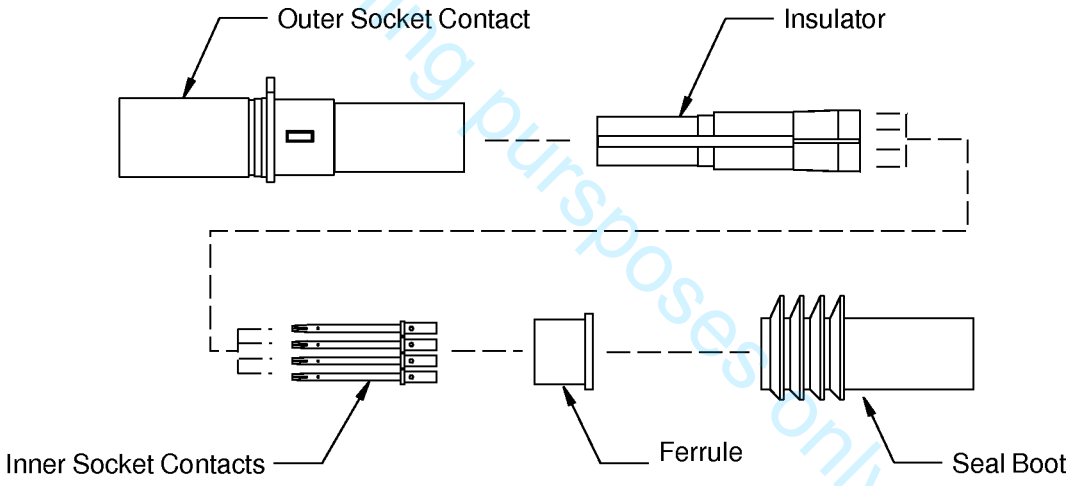

COMPONENTS SUPPLIED WITH THE BACC47GB QUADRAX SOCKET CONTACT
Figure 16

For training purposes only!

Table 16
QUADRAX CONTACT SEAL BOOT PART NUMBERS

Description	Part Number	Supplier	Reference
Seal Boot	1877626-1	Tyco	Figure 17

NOTE: The Tyco 1877626-1 seal boot is necessary for the installation of these quadrax contacts in the BACI10AL insert.

BOEING PROPRIETARY - Copyright © Unpublished Work - See title page for details

ASSEMBLY OF BACI10AL, BACI10AM, AND BACI10AP RECTANGULAR CONNECTOR INSERTS

TYCO 1877626-1 SEAL BOOT
Figure 17

Table 17
SUPPLIER PART NUMBERS FOR BOEING STANDARD SIZE 8 QUADRAX CONTACTS

Boeing Standard	Alternative Contact	
	Part Number	Supplier
BACC47GA1	1445692-4	Tyco
BACC47GB1	1445693-4	Tyco

For training purposes only!

F. Fiber Optic Contact Terminus Part Numbers

NOTE: The BACT64A() fiber optic terminus is part of the fiber optic cable assembly and cannot be removed. If it is necessary to replace a terminus, the fiber optic cable assembly must be replaced.

Refer to Subject 20-12-20 for:

- The inspection and cleaning procedures for fiber optic termini
- The fiber optic cable assembly part numbers.

Table 18
FIBER OPTIC CONTACT TERMINUS PART NUMBERS

Cable Assembly Part Number	Contact Terminus					
	Type		Size	Part Number		Reference
	End 1	End 2		End 1	End 2	
BACC69()AA	A (Non-keyed)	A (Non-keyed)	16	BACT64A1	BACT64A1	Figure 18
BACC69()CC	C (Keyed)	C (Keyed)	16	BACT64A2	BACT64A2	Figure 19
BACC69()AC	A (Non-keyed)	C (Keyed)	16	BACT64A1	BACT64A2	-

NOTE: A contact terminus that has a key can only be installed in a contact terminus cavity that has a keyway.

BOEING PROPRIETARY - Copyright © Unpublished Work - See title page for details

ASSEMBLY OF BACI10AL, BACI10AM, AND BACI10AP RECTANGULAR CONNECTOR INSERTS

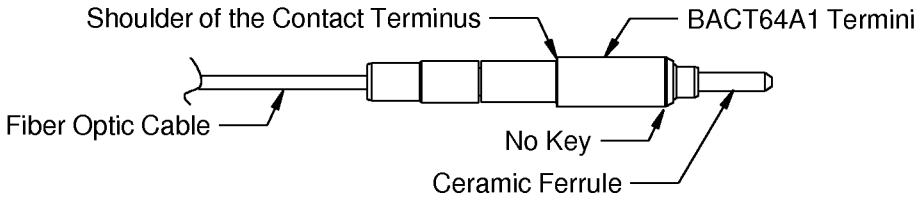

NON-KEYED FIBER OPTIC CONTACT TERMINUS
Figure 18

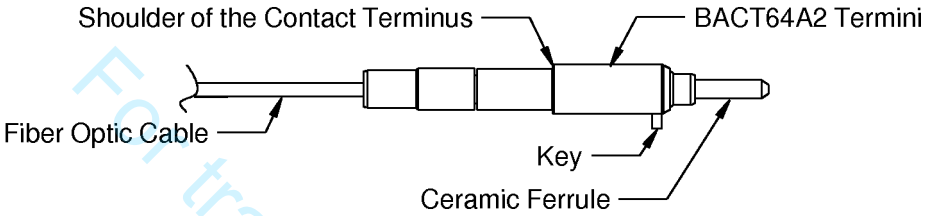

KEYED FIBER OPTIC CONTACT TERMINUS
Figure 19

For training purposes only!

G. Fiber Optic Alignment Sleeve Insert Part Numbers

Table 19
ALIGNMENT SLEEVE INSERT PART NUMBERS

Boeing Standard	Configuration
BACI10AU12R	Rectangular

Table 20
APPROVED SUPPLIERS OF BOEING STANDARD ALIGNMENT SLEEVE INSERTS

Alignment Sleeve Insert	Supplier
BACI10AU12R	RadiaII

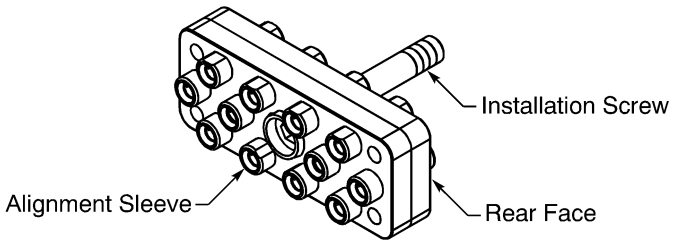

ALIGNMENT SLEEVE INSERT
Figure 20

BOEING PROPRIETARY - Copyright © Unpublished Work - See title page for details

ASSEMBLY OF BACI10AL, BACI10AM, AND BACI10AP RECTANGULAR CONNECTOR INSERTS

3. INSERT CONFIGURATIONS

A. BACI10AL Inserts

Table 21
BACI10AL INSERT CONFIGURATIONS

Insert Configuration	Contact Cavity				Reference
	Count	Size	Type	Identification	
BACI10AL00-N	0	-	-	-	Figure 21
BACI10AL3Q3	3	8	Quadrax, Twinax, Coax, or Power	1, 2, and 3	Figure 22
BACI10AL03	3	5	Coax or Power	A, B, and C	Figure 23
BACI10AL03P	3	5	Coax or Power	1, 2, and 3	Figure 24
BACI10AL06	6	12	Standard	1 thru 6	Figure 25
BACI10AL10Q2	8	20	Standard	3 thru 10	Figure 26
	2	8	Quadrax, Twinax, Coax, or Power	1 and 2	
BACI10AL12F	12	16	Fiber Optic Terminus, Non Keyed	1 thru 12	Figure 27
BACI10AL12FK	12	16	Fiber Optic Terminus, Keyed	1 thru 12	Figure 28
BACI10AL13C1	6	20	Standard	1 thru 4, 7, and 8	Figure 29
	4	16	Standard	9 thru 12	
	2	12	Standard	5 and 6	
	1	5	Coax or Power	A1	
BACI10AL13P1	6	20	Standard	1 thru 4, 7, and 8	Figure 30
	4	16	Standard	9 thru 12	
	2	12	Standard	5 and 6	
	1	5	Coax or Power	A1	
BACI10AL14	14	16	Standard	1 thru 14	Figure 31
BACI10AL17	14	20	Standard	1 thru 4, 6, 7, 9, and 11 thru 17	Figure 32
	3	12	Standard	5, 8, and 10	
BACI10AL20C1	19	20	Standard	1 thru 19	Figure 33
	1	5	Coax or Power	20	
BACI10AL22	16	20	Standard	1 thru 8, and 15 thru 22	Figure 34
	6	16	Standard	9 thru 14	

For training purposes only

BOEING PROPRIETARY - Copyright © Unpublished Work - See title page for details

ASSEMBLY OF BACI10AL, BACI10AM, AND BACI10AP RECTANGULAR CONNECTOR INSERTS

Table 21 (continued)

Insert Configuration	Contact Cavity				Reference
	Count	Size	Type	Identification	
BACI10AL22V1	16	20	Standard	7 thru 22	Figure 35
	6	16	Standard	1 thru 6	
BACI10AL25P1	1	8	Quadrax, Twinax, Coax, or Power	1	Figure 36
	24	22	Standard	2 thru 25	
BACI10AL25Q1	24	22	Standard	1 thru 24	Figure 37
	1	8	Quadrax, Twinax, Coax, or Power	25	
BACI10AL28	22	22	Standard	1 thru 22	Figure 38
	6	16	Standard	A thru F	
BACI10AL30	30	20	Standard	1 thru 30	Figure 39
BACI10AL34	18	22	Standard	9 thru 17, and 26 thru 34	Figure 40
	16	20	Standard	1 thru 8, and 18 thru 25	
BACI10AL40	40	22	Standard	A1 thru D10	Figure 41

NOTE: Figure 21 through Figure 41 show the rear side of shell size 2 inserts for pin contacts. The view of a BACI10AL insert for socket contacts is a mirror image of this view.

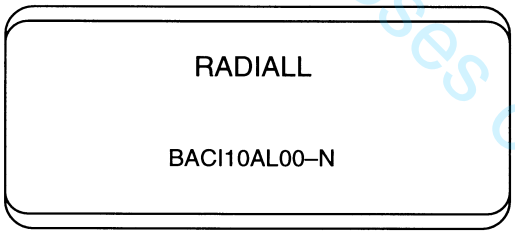

BACI10AL00-N INSERT
Figure 21

For training purposes only!

BOEING PROPRIETARY - Copyright © Unpublished Work - See title page for details

ASSEMBLY OF BACI10AL, BACI10AM, AND BACI10AP RECTANGULAR CONNECTOR INSERTS

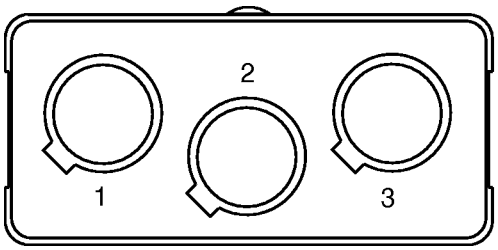

BACI10AL3Q3 INSERT
Figure 22

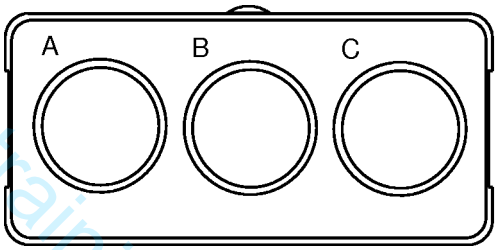

BACI10AL03 INSERT
Figure 23

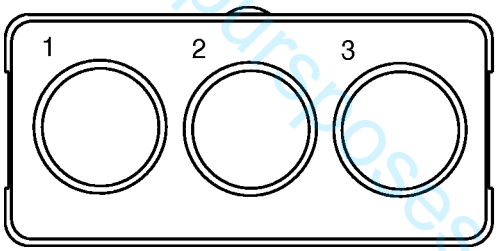

BACI10AL03P INSERT
Figure 24

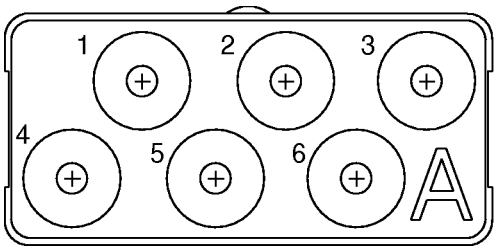

BACI10AL06 INSERT
Figure 25

For training purposes only!

BOEING PROPRIETARY - Copyright © Unpublished Work - See title page for details

ASSEMBLY OF BACI10AL, BACI10AM, AND BACI10AP RECTANGULAR CONNECTOR INSERTS

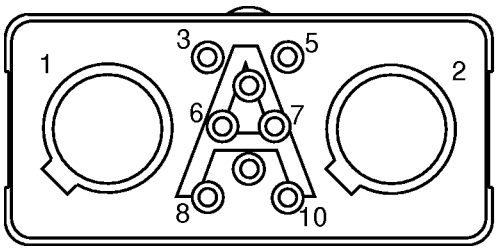

BACI10AL10Q2 INSERT
Figure 26

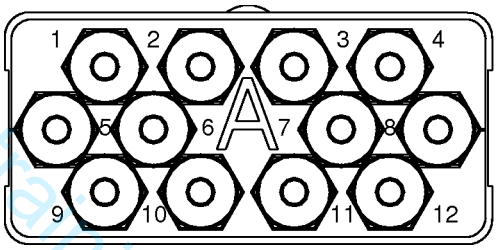

BACI10AL12F INSERT
Figure 27

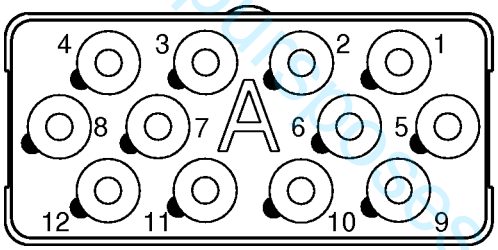

BACI10AL12FK INSERT
Figure 28

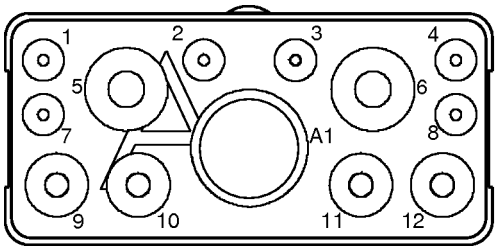

BACI10AL13C1 INSERT
Figure 29

For training purposes only!

BOEING PROPRIETARY - Copyright © Unpublished Work - See title page for details

ASSEMBLY OF BACI10AL, BACI10AM, AND BACI10AP RECTANGULAR CONNECTOR INSERTS

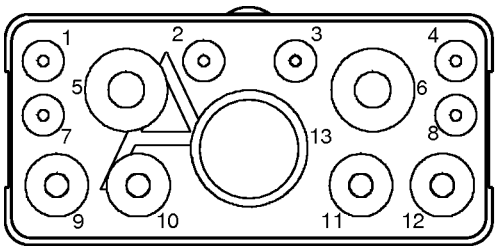

BACCI10AL13P1 INSERT
Figure 30

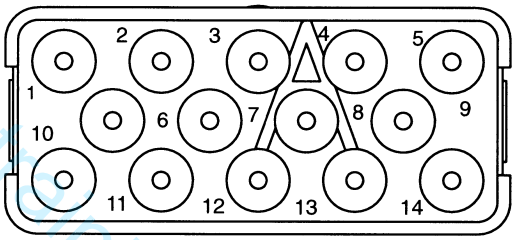

BACI10AL14 INSERT
Figure 31

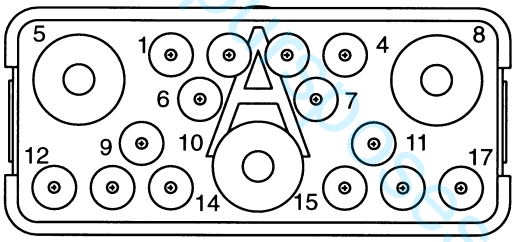

BACI10AL17 INSERT
Figure 32

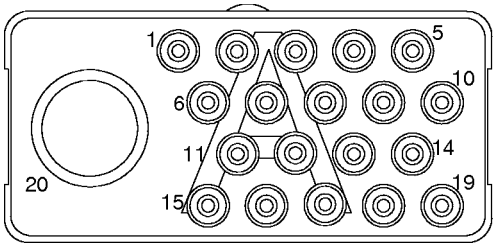

BACI10AL20C1 INSERT
Figure 33

For training purposes only!

BOEING PROPRIETARY - Copyright © Unpublished Work - See title page for details

ASSEMBLY OF BACI10AL, BACI10AM, AND BACI10AP RECTANGULAR CONNECTOR INSERTS

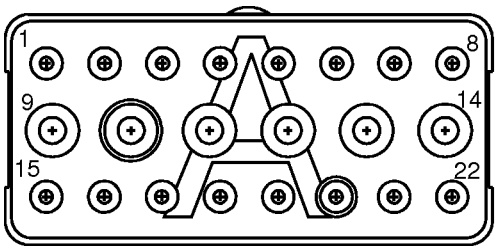

BACI10AL22 INSERT
Figure 34

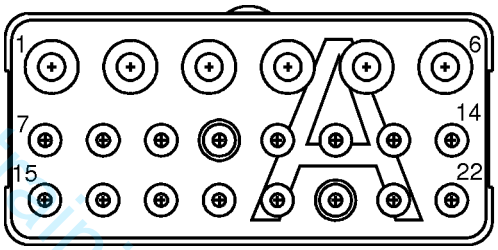

BACI10AL22V1 INSERT
Figure 35

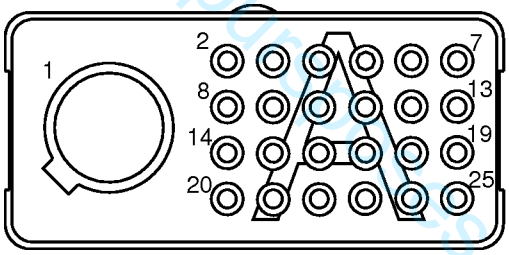

BACI10AL25P1 INSERT
Figure 36

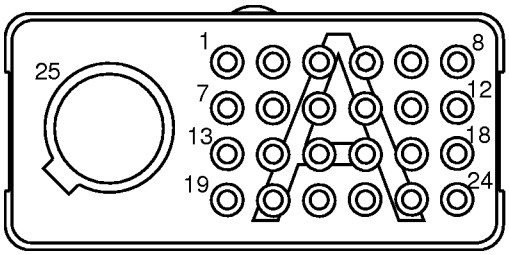

BACI10AL25Q1 INSERT
Figure 37

For training purposes only!

BOEING PROPRIETARY - Copyright © Unpublished Work - See title page for details

ASSEMBLY OF BACI10AL, BACI10AM, AND BACI10AP RECTANGULAR CONNECTOR INSERTS

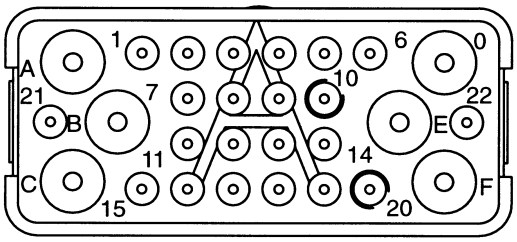

BACI10AL28 INSERT
Figure 38

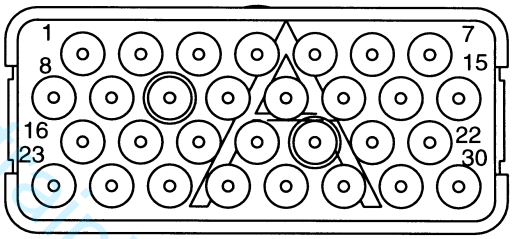

BACI10AL30 INSERT
Figure 39

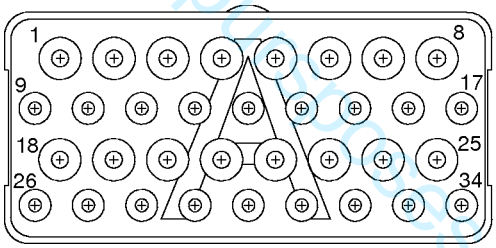

BACI10AL34 INSERT
Figure 40

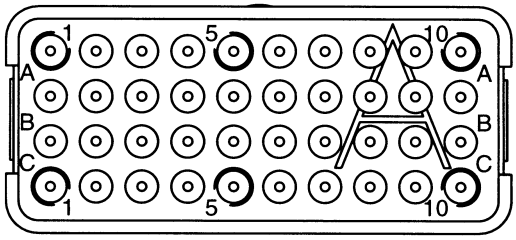

BACI10AL40 INSERT
Figure 41

For training purposes only!

BOEING PROPRIETARY - Copyright © Unpublished Work - See title page for details

B. BACI10AM Inserts

Table 22
BACI10AM BUSSED INSERT CONFIGURATIONS

Insert Configuration	Contact		Cavity	Reference
	Count	Size		
BACI10AM14L1AP	14	16	1 through 14	Figure 42
BACI10AM30L2AP	30	20	1 through 30	Figure 43
BACIT0AM40L2AP	40	22	A1 through D10	Figure 44

NOTE: These inserts have contact cavities that are electrically connected together. The thick black lines in Figure 42 through Figure 44 show the internal connections.

NOTE: Figure 42 through Figure 44 show the rear side of shell size 2 bussed inserts that have pin contacts. Bussed inserts do not have socket contacts.

For illustrative purposes only!

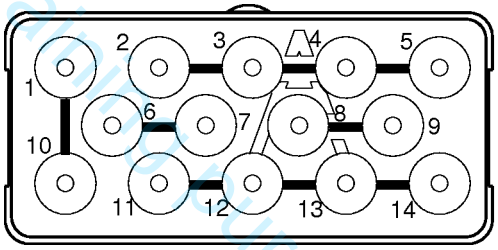

BACI10AM14L1AP INSERT
Figure 42

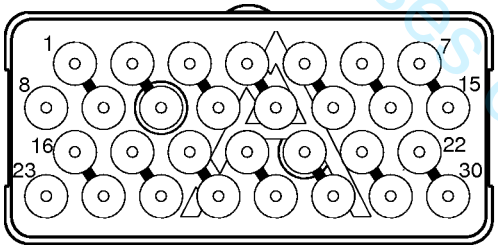

BACI10AM30L2AP INSERT
Figure 43

BOEING PROPRIETARY - Copyright © Unpublished Work - See title page for details

ASSEMBLY OF BACI10AL, BACI10AM, AND BACI10AP RECTANGULAR CONNECTOR INSERTS

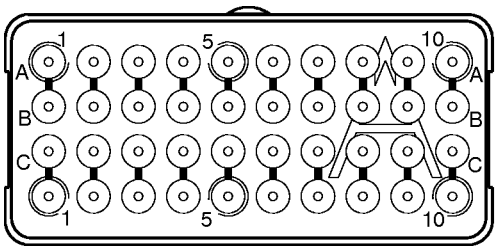

BACI10AM40L2AP INSERT
Figure 44

C. BACI10AP Inserts

For training purposes only

Table 23
BACI10AP INSERT CONFIGURATIONS

Insert Configuration	Contact		Cavity	Reference
	Count	Size		
BACI10AP00-N	0	-	-	Figure 45
BACI10AP01W1	1	5	1	Figure 46
BACI10AP04	2	16	2, 3	Figure 47
	2	12	1, 4	
BACI10AP09	3	20	3, 4, 9	Figure 48
	6	16	1, 2, 5, 6, 7, 8	
BACI10AP14	14	20	1 through 14	Figure 49
BACI10AP14M	8	22	1, 2, 5, 6, 9, 10, 11, 12	Figure 50
	3	20	3, 8, 13	
	3	16	4, 7, 14	
BACI10AP17	12	22	4, 7 through 17	Figure 51
	5	20	1, 2, 3, 5, 6	
BACI10AP20	20	22	A1 through D5	Figure 52

NOTE: Figure 45 through Figure 52 show the rear side of the shell size 1 inserts for pin contacts. The view of a BACI10AP insert for socket contacts is a mirror image of this view.

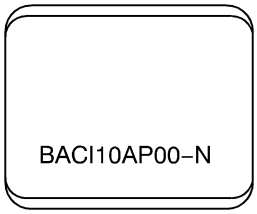

BACI10AP00-N INSERT
Figure 45

BOEING PROPRIETARY - Copyright © Unpublished Work - See title page for details

ASSEMBLY OF BACI10AL, BACI10AM, AND BACI10AP RECTANGULAR CONNECTOR INSERTS

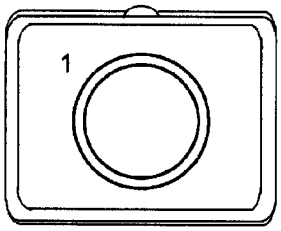

BACI10AP01W1 INSERT
Figure 46

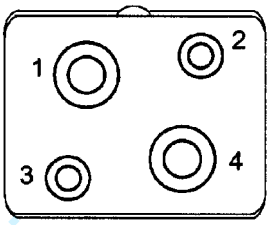

BACI10AP04 INSERT
Figure 47

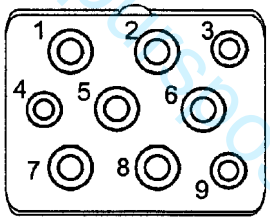

BACI10AP09 INSERT
Figure 48

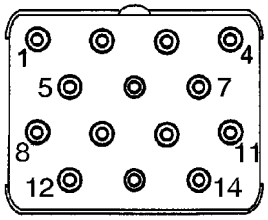

BACI10AP14 INSERT
Figure 49

For training purposes only!

BOEING PROPRIETARY - Copyright © Unpublished Work - See title page for details

ASSEMBLY OF BACI10AL, BACI10AM, AND BACI10AP RECTANGULAR CONNECTOR INSERTS

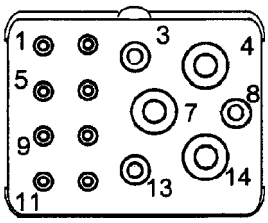

BACI10AP14M INSERT
Figure 50

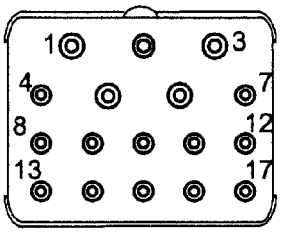

BACI10AP17 INSERT
Figure 51

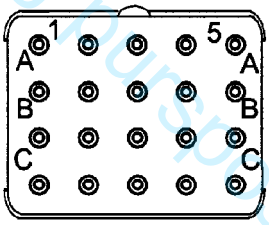

BACI10AP20 INSERT
Figure 52

For training purposes only!

4. CONNECTOR INSERT DISASSEMBLY

A. Seal Plug and Seal Rod Removal

Table 24
NECESSARY TOOLS

Tool	Type
Pliers	Needle Nose

(1) Make a selection of a pair of pliers from Table 24.

CAUTION: MAKE SURE THE PLIERS HAVE SMOOTH SURFACES AND NO SHARP EDGES. PLIERS WITH A ROUGH SURFACE OR A SHARP EDGE CAN CAUSE DAMAGE TO THE REAR GROMMET.

(2) If it is necessary to get access to the rear of the insert, remove the plastic tie straps or the wire harness ties that are less than 6 inches from the connector.

BOEING PROPRIETARY - Copyright © Unpublished Work - See title page for details

(3) Tightly hold the end of the seal plug or the seal rod in the jaws of the pliers.

(4) Pull the seal plug or the seal rod straight out of the contact cavity.

B. Contact Removal

This paragraph gives the procedure to remove size 2222, 2020, 1616, 1212, size 8 coax, twinax and quadrax, and size 0808 power contacts from the connector insert.

For the procedure to remove these contacts from the insert, refer to:

- Paragraph 4.C. for size 5 coax and size 0508 or 0505 power contacts
- Paragraph 4.D. for fiber optic contact termini.

For the procedure to remove ground block contacts from the connector ground block, refer to:

- Subject 20-74-12 for BACC65AA and BACC65AB connectors
- Subject 20-74-13 for BACC65AN, BACC65AP, BACC65AV and BACC65AW connectors
- Subject 20-74-14 for BACC65BJ and BACC65BK connectors.

For training purposes Only!!

Table 25
REMOVAL TOOLS FOR SIZE 2222, 2020, 1616, AND 1212 CONTACTS

Connector Insert Contact Cavity Size	BACC47FJ and BACC47FK Contact Size	EPXB Contact Size	Removal Tool	
			Part Number	Color
22	2222	-	M81969/1-01	White
			DRK266J	-
20	2020	-	M81969/39-01	White
			CIET-20HDL	-
16	1616	-	M81969/14-03	White
			CIET-16	-
	-	1616	M81969/1-03	White
12	1212	-	M81969/14-04	White
			CET-12-4	-

Table 26
REMOVAL TOOLS FOR SIZE 8 COAX, TWINAX, QUADRAX, AND SIZE 0808 POWER CONTACTS

Contact Cavity Size	Removal Tool
	Part Number
8	1738894-1

(1) Make a selection of a contact removal tool from:

- Table 25 for size 2222, 2020, 1616 and 1212 contacts
- Table 26 for size 8 coax, size 8 twinax, size 8 quadrax and size 0808 power contacts.

BOEING PROPRIETARY - Copyright © Unpublished Work - See title page for details

ASSEMBLY OF BACI10AL, BACI10AM, AND BACI10AP RECTANGULAR CONNECTOR INSERTS

CAUTION: DO NOT USE A REMOVAL TOOL THAT HAS A DEFECT. A REMOVAL TOOL THAT HAS A DEFECT CAN CAUSE DAMAGE TO THE GROMMET OR THE RETENTION CLIP.

(2) If the contact is a size 8 coax, size 8 twinax, size 8 quadrax or a size 0808 power contact, pull the seal boot out of the contact cavity and back away from the grommet.

(3) Put the forward part of the removal tool on the wire near the rear of the insert. Refer to Figure 53.

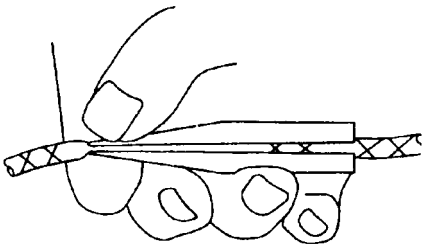

POSITION OF THE WIRE IN THE FORWARD PART OF THE REMOVAL TOOL
Figure 53

(4) Axially align the removal tool and the contact cavity.

Make sure that the removal tool is perpendicular to the face of the insert.

(5) Carefully push the removal tool into the contact cavity until it stops. Refer to Figure 54.

Make sure that:

- The tool stays aligned with the cavity
- The tool is not turned in the cavity.

CAUTION: IF THE TOOL IS TURNED WHILE IT IS IN THE CAVITY, DAMAGE TO THE CONNECTOR CAN OCCUR.

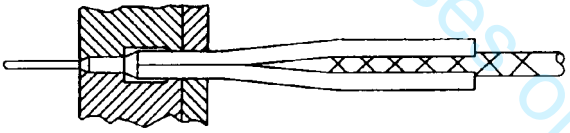

REMOVAL TOOL FULLY INSERTED IN THE CONTACT CAVITY
Figure 54

(6) Carefully pull the wire and the removal tool out of the contact cavity at the same time. Refer to Figure 55.

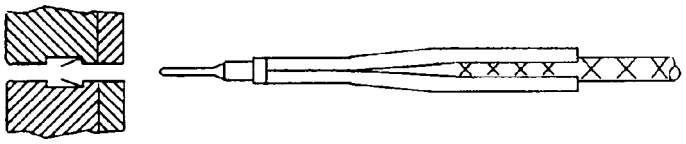

TOOL AND CONTACT REMOVED FROM THE CAVITY
Figure 55

(7) If the contact is not released:

For training purposes only!

BOEING PROPRIETARY - Copyright © Unpublished Work - See title page for details

(a) Pull the contact removal tool out of the contact cavity.

(b) Turn the removal tool approximately 90 degrees.

(c) Do Step (3) through Step (6) again.

C. Removal of Size 5 Coax and Size 0508 or 0505 Power Contacts

This paragraph gives the procedure to remove size 5 coax contacts and size 0508 or size 0505 power contacts from the connector insert.

Table 27
REMOVAL TOOLS FOR SIZE 5 COAX AND SIZE 0508 POWER CONTACTS

Contact Cavity Size	Removal Tool	
	Part Number	Color
5	MS3178-001	White
	CET-C8	-

(1) Make a selection of a contact removal tool from Table 27.

CAUTION: DO NOT USE A REMOVAL TOOL THAT HAS A DEFECT. A REMOVAL TOOL THAT HAS A DEFECT CAN CAUSE DAMAGE TO THE GROMMET OR THE RETENTION CLIP.

(2) If the contact has a blue intermediate seal boot, pull the silicone seal boot and the blue intermediate seal boot out of the contact cavity and back away from the insert. Refer to Figure 56.

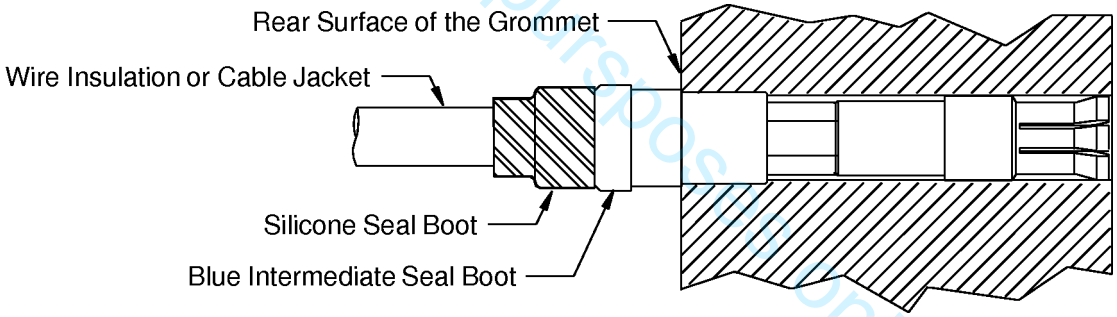

REMOVAL OF THE SILICONE SEAL BOOT AND THE BLUE INTERMEDIATE SEAL BOOT
Figure 56

(3) If the contact has an amber intermediate seal boot:

(a) Carefully cut the heat shrinkable sleeve longitudinally to remove it from the cable. Refer to Figure 57.

For training purposes only!

BOEING PROPRIETARY - Copyright © Unpublished Work - See title page for details

ASSEMBLY OF BACI10AL, BACI10AM, AND BACI10AP RECTANGULAR CONNECTOR INSERTS

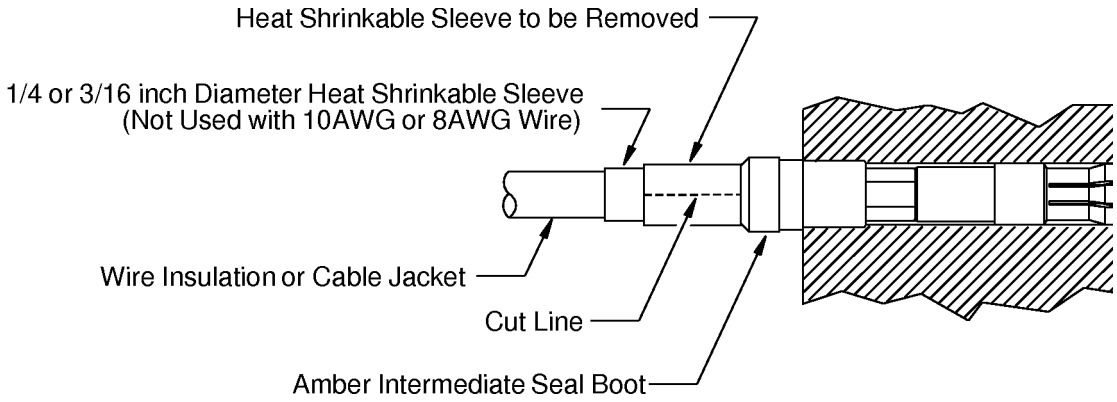

REMOVAL OF THE HEAT SHRINKABLE SLEEVE AND THE AMBER INTERMEDIATE SEAL BOOT
Figure 57

For training purposes only!

CAUTION: DO NOT CUT ALL THE WAY THROUGH THE HEAT SHRINKABLE SLEEVE. DAMAGE TO THE INSULATION OF THE WIRE OR CABLE CAN OCCUR.

(b) Pull or tear the heat shrinkable sleeve until it is not attached.

(c) Pull the amber intermediate seal boot out of the contact cavity and back away from the insert.

(4) Put the tip of the removal tool on the wire near the rear of the insert.

(5) Axially align the removal tool and the contact cavity.

Make sure that the removal tool is perpendicular to the rear face of the insert.

(6) Carefully push the removal tool into the contact cavity until it stops.

Make sure that:

- The removal tool stays perpendicular to the rear face of the insert
- The removal tool is not turned in the cavity.

CAUTION: IF THE REMOVAL TOOL IS TURNED WHILE IT IS IN THE CAVITY, DAMAGE TO THE CONNECTOR CAN OCCUR.

(7) Carefully pull the wire and the removal tool out of the contact cavity at the same time.

(8) If the contact is not released:

(a) Pull the contact removal tool out of the contact cavity.

(b) Turn the removal tool approximately 90 degrees.

(c) Do Step (5) through Step (7) again.

D. Removal of Fiber Optic Contact Termini

Refer to the procedures for Contact Terminus Removal in Subject 20-12-21.

BOEING PROPRIETARY - Copyright © Unpublished Work - See title page for details

ASSEMBLY OF BACI10AL, BACI10AM, AND BACI10AP RECTANGULAR CONNECTOR INSERTS

E. Removal of the Fiber Optic Alignment Sleeve Insert

CAUTION: DO NOT PULL, SHAKE, OR TWIST THE ALIGNMENT SLEEVE INSERT FROM THE CONNECTOR INSERT. DAMAGE TO THE CERAMIC FERRULES OF THE CONTACT TERMINI CAN OCCUR.

Table 28
NECESSARY TOOLS

Tool	Type	Size (inch)
Driver	Allen Wrench	5/64
	Screwdriver, Hex	5/64

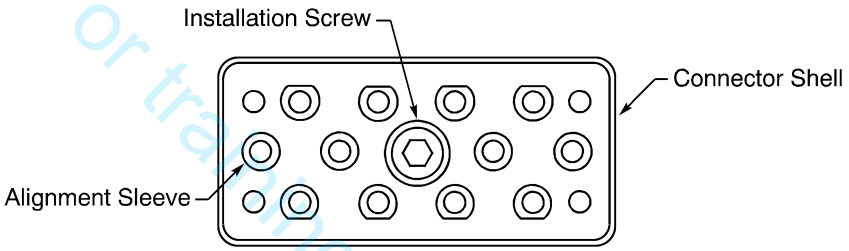

ALIGNMENT SLEEVE INSERT INSTALLATION SCREW
Figure 58

(1) Make a selection of a driver from Table 28.

NOTE: The driver can have a ball type end.

(2) Turn the installation screw in a counterclockwise direction until the screw is disengaged from the face of the insert.

CAUTION: DO NOT SHAKE OR TWIST THE ALIGNMENT SLEEVE INSERT TO REMOVE IT FROM THE CONNECTOR INSERT. DAMAGE TO THE CERAMIC FERRULES OF THE CONTACT TERMINI CAN OCCUR.

(3) Put the alignment sleeve insert in a clean plastic bag.

For training purposes only!

BOEING PROPRIETARY - Copyright © Unpublished Work - See title page for details

ASSEMBLY OF BACI10AL, BACI10AM, AND BACI10AP RECTANGULAR CONNECTOR INSERTS

CAUTION: KEEP THE ALIGNMENT SLEEVE INSERT IN A CLEAN PLASTIC BAG UNTIL IT IS INSTALLED IN THE CONNECTOR INSERT. CONTAMINATION CAN CAUSE UNSATISFACTORY PERFORMANCE OF THE CONNECTOR INSERT.

5. CONNECTOR INSERT ASSEMBLY

A. Cable Preparation for Shield Termination in the Connector Insert - Standard Configuration

Table 29
SHIELD TERMINATION CONFIGURATION DEFINITIONS

Shield Termination Configuration	Definition
End Strip	The cable jacket and shield removal for non-EMI configurations where the location of the shield termination can occur between the shield termination ring and the strain relief clamp
Standard	The cable jacket and shield removal for EMI configurations where the location of the shield termination must occur between the strain relief clamp and the connector

Table 30
CABLE JACKET REMOVAL LENGTH

Solder Sleeve	Removal Length L (inch)	
	Target	Tolerance
BACS13CT	3.0	±0.06
BACS13DG	3.0	±0.06
D-104	3.10	±0.06
D-108	3.17	±0.06

(1) Remove the necessary length of the jacket from the end of the cable.
Refer to:
- Table 30
- Figure 59
- Subject 20-10-15 for the procedure to remove the cable jacket.

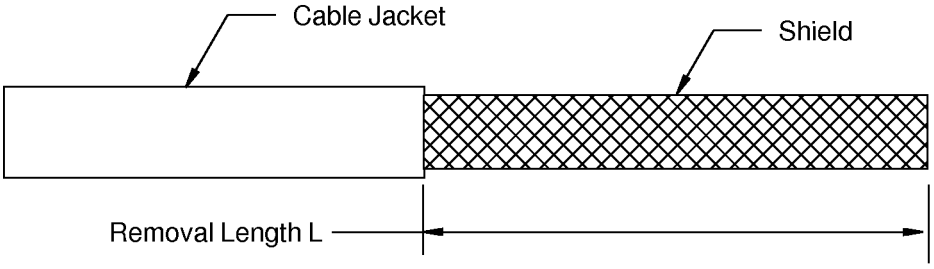

CABLE JACKET REMOVAL
Figure 59

For training purposes only!

BOEING PROPRIETARY - Copyright © Unpublished Work - See title page for details

(2) Assemble an insulated shield ground wire at the end of the cable jacket. Refer to Subject 20-10-15. Make sure that the free end of the shield ground wire is pointed forward toward the end of the cable.

(3) Remove the necessary length from the end of the shield ground wire to make the distance from the end of the shield to the end of the shield ground wire equal to 2.75 inches maximum. Refer to Figure 60.

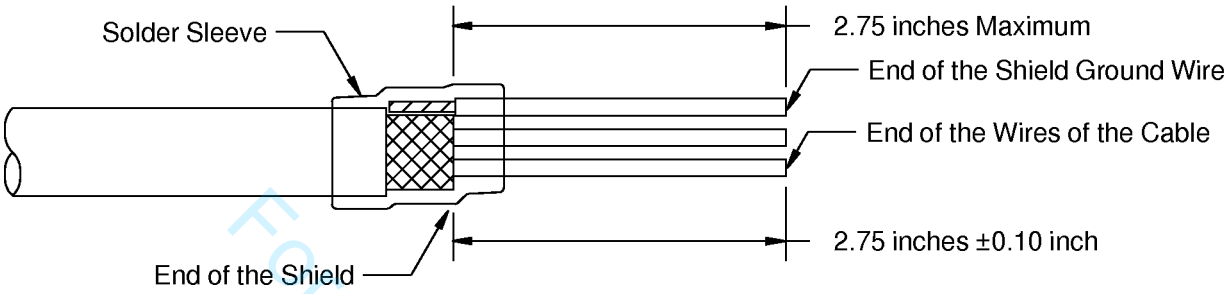

LENGTH OF THE SHIELD GROUND WIRE AND THE WIRES OF THE CABLE
Figure 60

B. Cable Preparation for Shield Termination in the Connector Insert - End Strip Configuration

NOTE: This procedure is permitted only when an End Strip shield termination is specified.

CAUTION: AN END STRIP SHIELD TERMINATION ON A CABLE THAT IS NOT SPECIFIED CAN CAUSE UNSATISFACTORY PERFORMANCE OF THE CABLE.

Table 31
SHIELD TERMINATION CONFIGURATION DEFINITIONS

Shield Termination Configuration	Definition
End Strip	The cable jacket and shield removal for non-EMI configurations where the location of the shield termination can occur between the shield termination ring and the strain relief clamp
Standard	The cable jacket and shield removal for EMI configurations where the location of the shield termination must occur between the strain relief clamp and the connector

Table 32
CABLE JACKET REMOVAL LENGTH

Solder Sleeve	Removal Length L (inch)	
	Target	Tolerance
BACS13CT	3.75	±0.06
BACS13DG	3.75	±0.06
D-104	3.85	±0.06
D-108	3.92	±0.06

BOEING PROPRIETARY - Copyright © Unpublished Work - See title page for details
For training purposes only!

ASSEMBLY OF BACI10AL, BACI10AM, AND BACI10AP RECTANGULAR CONNECTOR INSERTS

(1) Remove the necessary length of the jacket from the end of the cable.

Refer to:

- Table 32
- Figure 61
- Subject 20-10-15 for the procedure to remove the cable jacket.

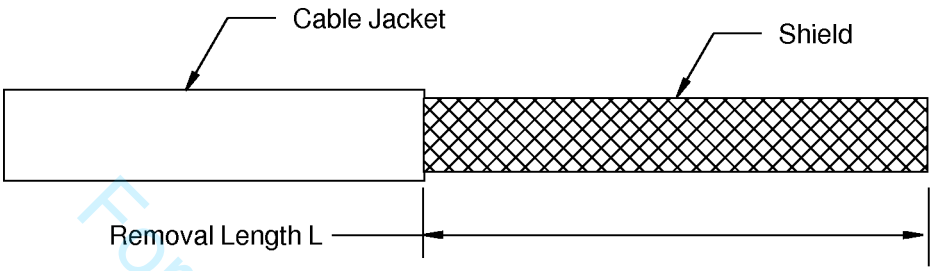

CABLE JACKET REMOVAL
Figure 61

(2) Assemble an insulated shield ground wire at the end of the cable jacket. Refer to Subject 20-10-15. Make sure that the free end of the shield ground wire is pointed forward to the end of the cable.

(3) Remove the necessary length from the end of the shield ground wire to make the distance from the end of the cable shield to the end of the shield ground wire equal to 3.5 inches maximum. Refer to Figure 62.

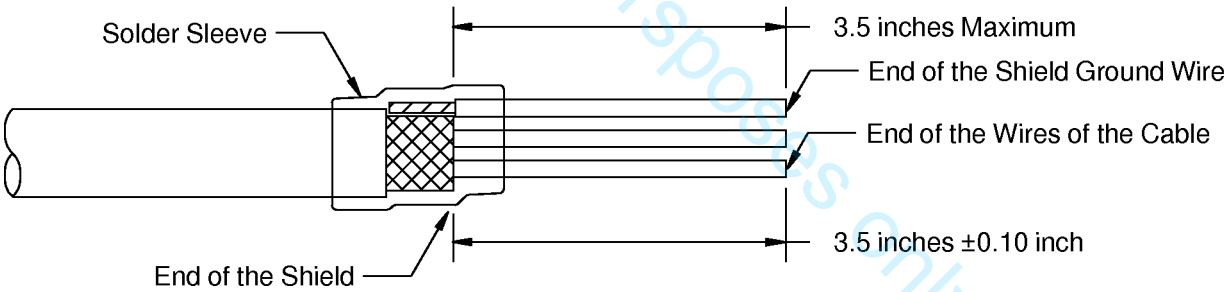

LENGTH OF THE SHIELD GROUND WIRE AND THE WIRES OF THE CABLE
Figure 62

C. Cable Preparation for Shield Termination in the Connector Insert - Connector Without a Backshell

Table 33
CABLE JACKET REMOVAL LENGTH

Solder Sleeve	Removal Length L (inch)	
	Target	Tolerance
BACS13CT	2.0	±0.06
BACS13DG	2.0	±0.06

BOEING PROPRIETARY - Copyright © Unpublished Work - See title page for details
For training purposes only.

ASSEMBLY OF BACI10AL, BACI10AM, AND BACI10AP RECTANGULAR CONNECTOR INSERTS

Table 33 (continued)

Solder Sleeve	Removal Length L (inch)	
	Target	Tolerance
D-104	2.10	±0.06
D-108	2.17	±0.06

(1) Remove the necessary length of the jacket from the end of the cable.

Refer to:

- Table 33
- Figure 63
- Subject 20-10-15 for the procedure to remove the cable jacket.

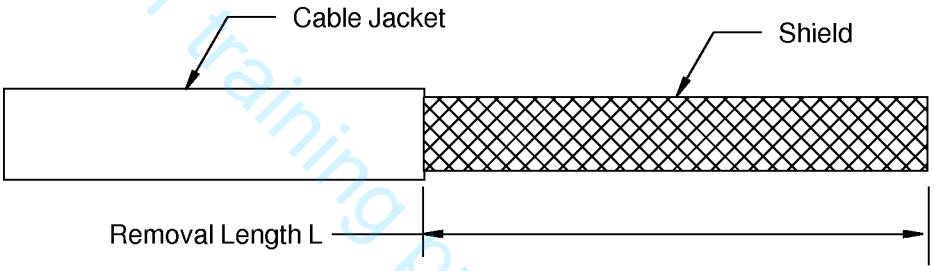

CABLE JACKET REMOVAL
Figure 63

(2) Assemble an insulated shield ground wire at the end of the cable jacket.

Make sure that the free end of the shield ground wire is pointed forward toward the end of the cable.

(3) Remove the necessary length from the end of the shield ground wire to make the distance from the end of the shield to the end of the shield ground wire equal to 1.75 inches maximum. Refer to Figure 64.

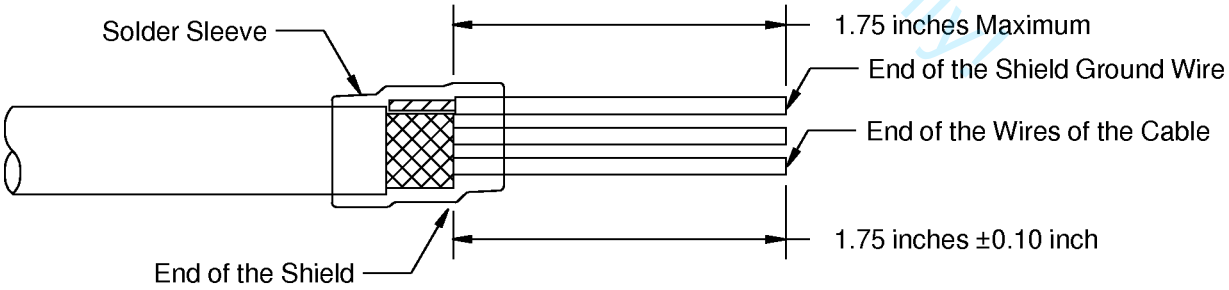

LENGTH OF THE SHIELD GROUND WIRE AND THE WIRES OF THE CABLE
Figure 64

For training purposes only

BOEING PROPRIETARY - Copyright © Unpublished Work - See title page for details

D. Contact Assembly

This paragraph gives the procedure to assemble size 2222, 2020, 1616, 1212, and 0808 contacts that are intended for installation in the connector insert.

For the procedure to assemble these insert contacts, refer to:

- Paragraph 5.H. for EPXB contacts
- Paragraph 5.P. for size 0508 or 0505 power contacts
- Paragraph 5.J. for size 5 coax contacts
- Paragraph 5.K. for S280W554-111 and S280W554-113 size 8 coax contacts
- Paragraph 5.L. for Tyco 1757624-1 and Tyco 1883369-2 size 8 coax contacts
- Paragraph 5.M. for size 8 twinax contacts
- Paragraph 5.N. for size 8 quadrax contacts

For the procedure to assemble the connector ground block contacts, refer to the Subject for the connector:

For training purposes only

Table 34
INSULATION REMOVAL LENGTH

Wire Size (AWG)	Contact Size	Removal Length L (inch)		Special Instructions
		Target	Tolerance	
26	2222	0.15	±0.02	-
	2020	0.34	±0.03	Fold the conductor back
24	2222	0.15	±0.02	-
	2020	0.17	±0.03	-
	1616	0.56	±0.03	Fold the conductor back
	1212	0.56	±0.03	Fold the conductor back and put the folded back conductor in an IEI Y9015C or a Circon CE66FC contact filler.
22	2222	0.15	±0.02	-
	2020	0.17	±0.03	-
	1616	0.56	±0.03	Fold the conductor back
	1212	0.56	±0.03	Fold the conductor back and put the folded back conductor in an IEI Y9015C or a Circon CE66FC contact filler.
20	2020	0.17	±0.03	-
	1616	0.28	±0.03	-
	1212	0.56	±0.03	Fold the conductor back
18	1616	0.28	±0.03	-
	1212	0.56	±0.03	Fold the conductor back
16	1616	0.28	±0.03	-
	1212	0.28	±0.03	-

BOEING PROPRIETARY - Copyright © Unpublished Work - See title page for details

ASSEMBLY OF BACI10AL, BACI10AM, AND BACI10AP RECTANGULAR CONNECTOR INSERTS

Table 34 (continued)

Wire Size (AWG)	Contact Size	Removal Length L (inch)		Special Instructions
		Target	Tolerance	
14	1212	0.28	±0.03	-
12	1212	0.28	±0.03	-
10	0808	0.51	±0.03	-
8	0808	0.51	±0.03	-

Table 35
CONTACT CRIMP TOOLS

Contact Size	Wire Size (AWG)	Crimp Tool				
		Basic Unit		Die	Locator	
		Part Number	Setting		Part Number	Color
2222	26	M22520/2-01	3	-	M22520/2-23	-
		WA22	3	-	M22520/2-23	-
		WA22LC	3	-	M22520/2-23	-
	24	AFM-10	3	-	K1538	-
		GWT-2202-()	4	-	-	-
		M22520/2-01	3	-	M22520/2-23	-
		WA22	3	-	M22520/2-23	-
		WA22LC	3	-	M22520/2-23	-
	22	AFM-10	4	-	K1538	-
		GWT-2202-()	4	-	-	-
		M22520/2-01	4	-	M22520/2-23	-
		WA22	4	-	M22520/2-23	-
		WA22LC	4	-	M22520/2-23	-

For training purposes only

BOEING PROPRIETARY - Copyright © Unpublished Work - See title page for details

ASSEMBLY OF BACI10AL, BACI10AM, AND BACI10AP RECTANGULAR CONNECTOR INSERTS

Table 35 (continued)

Contact Size	Wire Size (AWG)	Crimp Tool				
		Basic Unit		Die	Locator	
		Part Number	Setting		Part Number	Color
2020	26	M22520/2-01	5	-	M22520/2-08	-
		WA22	5	-	M22520/2-08	-
		WA22LC	5	-	M22520/2-08	-
	24	AGP-WA22	5	-	K1538	-
		GWT-2202-()	4	-	-	-
		M22520/2-01	5	-	M22520/2-08	-
		WA22	5	-	M22520/2-08	-
		WA22LC	5	-	M22520/2-08	-
		WA27XB	4	-	M22520/1-02	Blue
	22	AGP-WA22	5	-	-	-
		GWT-22-2-()	-	-	-	-
		M22520/2-01	6	-	M22520/2-08	-
		WA22	6	-	M22520/2-08	-
		WA22LC	6	-	M22520/2-08	-
		WA27XB	4	-	M22520/1-02	Blue
	20	AGP-WA22	5	-	-	-
		GWT-2202-()	-	-	-	-
		M22520/2-01	7	-	M22520/2-08	-
		WA22	7	-	M22520/2-08	-
		WA22LC	7	-	M22520/2-08	-
		WA27XB	4	-	M22520/1-02	Blue
1616	24	M22520/1-01	4	-	M22520/1-02	Blue
		WA27F	4	-	M22520/1-02	Blue
	22	M22520/1-01	4	-	M22520/1-02	Blue
		WA27F	4	-	M22520/1-02	Blue
	20	M22520/1-01	4	-	M22520/1-02	Blue
		WA27F	4	-	M22520/1-02	Blue
	18	M22520/1-01	5	-	M22520/1-02	Blue
		WA27F	5	-	M22520/1-02	Blue
	16	M22520/1-01	6	-	M22520/1-02	Blue
		WA27F	6	-	M22520/1-02	Blue

For training purposes only

BOEING PROPRIETARY - Copyright © Unpublished Work - See title page for details

ASSEMBLY OF BACI10AL, BACI10AM, AND BACI10AP RECTANGULAR CONNECTOR INSERTS

Table 35 (continued)

Contact Size	Wire Size (AWG)	Crimp Tool				
		Basic Unit		Die	Locator	
		Part Number	Setting		Part Number	Color
1212	24	M22520/1-01	7	-	M22520/1-02	Yellow
		WA27F	7	-	M22520/1-02	Yellow
	22	M22520/1-01	7	-	M22520/1-02	Yellow
		WA27F	7	-	M22520/1-02	Yellow
	20	M22520/1-01	7	-	M22520/1-02	Yellow
		WA27F	7	-	M22520/1-02	Yellow
	18	M22520/1-01	7	-	M22520/1-02	Yellow
		WA27F	7	-	M22520/1-02	Yellow
	16	M22520/1-01	7	-	M22520/1-02	Yellow
		WA27F	7	-	M22520/1-02	Yellow
	14	M22520/1-01	7	-	M22520/1-02	Yellow
		M22520/1-01	7	-	M22520/1-11	Yellow
		WA27F	7	-	M22520/1-02	Yellow
		WA27F	7	-	M22520/1-11	Yellow
	12	M22520/1-01	8	-	M22520/1-02	Yellow
		M22520/1-01	8	-	M22520/1-11	Yellow
		WA27F	8	-	M22520/1-02	Yellow
		WA27F	8	-	M22520/1-11	Yellow
0808	10	M22520/23-01	-	M22520/23-02	282588	-
		PICO400B	-	414DA-8N	282588	-
	8	M22520/23-01	-	M22520/23-02	282588	-
		PICO400B	-	414DA-8N	282588	-

(1) Make a selection of a crimp tool from Table 35.

(2) If it is necessary, decrease the O.D. of the wire. Refer to Paragraph 5.G..

NOTE: It is necessary to decrease the O.D. of the wire if:

- It is specified, or
- If the O.D. of the wire insulation is larger than the O.D. of the contact crimp barrel.

(3) If it is not necessary to decrease of the O.D. of the wire:

(a) Remove the necessary length of insulation from the end of the wire.

For training purposes only

BOEING PROPRIETARY - Copyright © Unpublished Work - See title page for details

Refer to:

- Figure 65
- Table 34 for the insulation removal length
- Subject 20-00-15 for the insulation removal procedures.

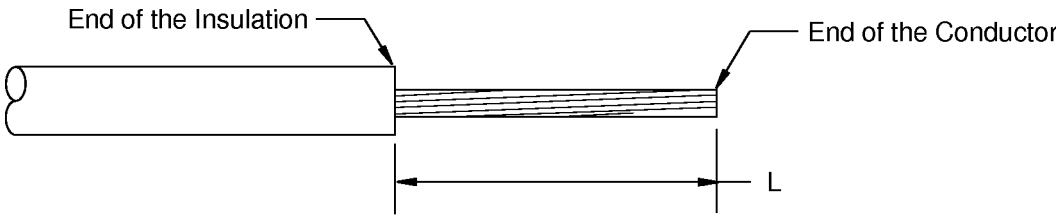

INSULATION REMOVAL LENGTH
Figure 65

(b) if it is specified, or If the O.D. of the wire is less than the minimum seal diameter of the grommet hole, increase the O.D. of the wire.

Refer to:

- Paragraph 1.C. for the minimum seal diameters
- Paragraph 5.E. for the procedures to increase the O.D. of an unshielded wire
- Paragraph 5.F. for the procedures to increase the O.D. of a shielded wire.

(4) If it is specified, fold the conductor back.

Refer to:

- Table 34
- Figure 66.

NOTE: Refer to Subject 20-60-00 if the wire size and a larger crimp barrel size are not given in Table 34 for the alternative to the assembly of a contact with a conductor that is folded back.

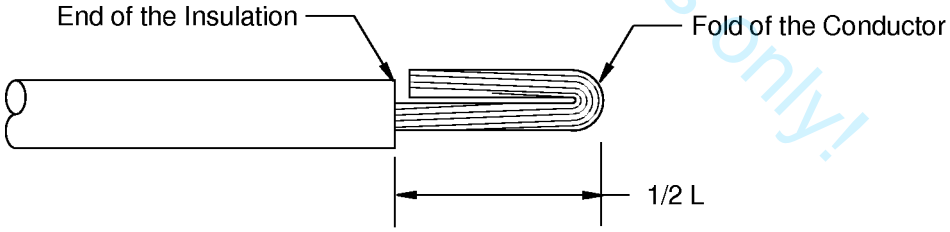

FOLDED BACK CONDUCTOR
Figure 66

(5) Put the end of the wire in the crimp barrel of the contact. Refer to Figure 67.

For training purposes only!

BOEING PROPRIETARY - Copyright © Unpublished Work - See title page for details

Make sure that:

- All of the strands of the conductor are in the crimp barrel
- The conductor can be seen in the inspection hole
- The insulation of the wire is not in the crimp barrel
- The distance from the end of the insulation to the end of the crimp barrel is not more than 0.03 inch.

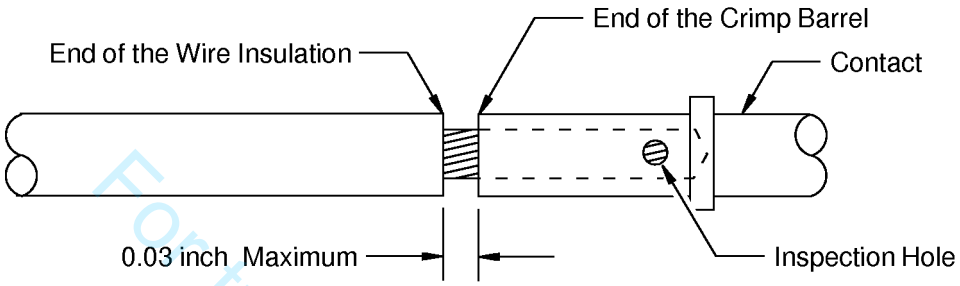

POSITION OF THE WIRE IN THE CRIMP BARREL OF THE CONTACT
Figure 67

(6) Crimp the contact.

Make sure that:

- All of the strands of the conductor are in the crimp barrel
- The conductor can be seen in the inspection hole
- The insulation of the wire is not in the crimp barrel
- The distance from the end of the insulation to the end of the crimp barrel is not more than 0.03 inch.

(7) If the decrease of the O.D. of the wire with one heat shrinkable sleeve is specified:

(a) Push the heat shrinkable sleeve forward until the forward end of the sleeve is 0.03 inch maximum from the end of the crimp barrel. Refer to Figure 68.

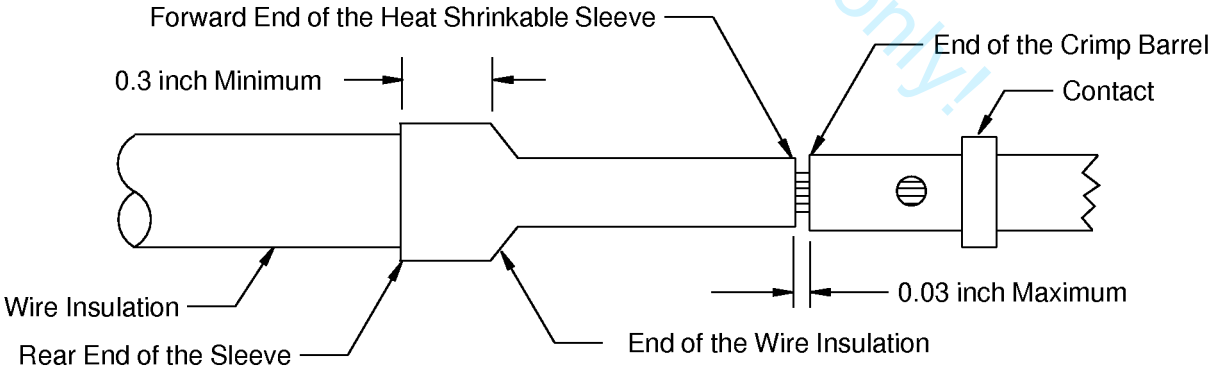

POSITION OF THE HEAT SHRINKABLE SLEEVE
Figure 68

(b) Shrink the sleeve into its position.

For training purposes only!!

BOEING PROPRIETARY - Copyright © Unpublished Work - See title page for details

Refer to:

- Figure 68
- Subject 20-10-14 for the procedure to shrink a heat shrinkable sleeve.

Make sure that:

- The distance from the forward end of the sleeve to the crimp barrel of the contact is not farther than 0.03 inch
- The sleeve makes a 0.3 inch minimum overlap with the end of the wire insulation.

(8) If the decrease of the O.D. of the wire with two heat shrinkable sleeves is specified, or if the inner and outer heat shrinkable sleeves are on the wire, and the sleeves have not been heated:

(a) Push the inner sleeve forward until the forward end of the sleeve is 0.03 inch maximum from the end of the crimp barrel. Refer to Figure 69.

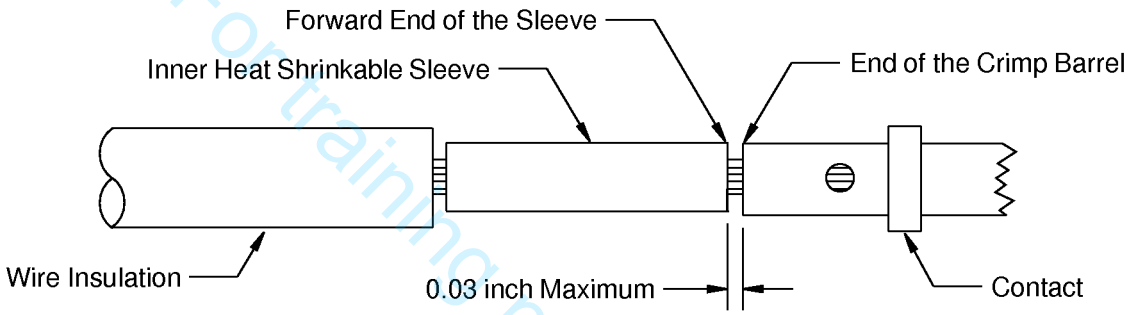

POSITION OF THE INNER SLEEVE
Figure 69

(b) Shrink the sleeve into its position.

Refer to:

- Figure 69
- Subject 20-10-14 for the procedure to shrink a heat shrinkable sleeve.

Make sure that the distance between the forward end of the sleeve and the crimp barrel is not more than 0.03 inch.

(c) Push the outer sleeve forward until the forward end of the sleeve extends 0.3 inch minimum forward from the end of the insulation. Refer to Figure 70.

For training purposes only!

BOEING PROPRIETARY - Copyright © Unpublished Work - See title page for details

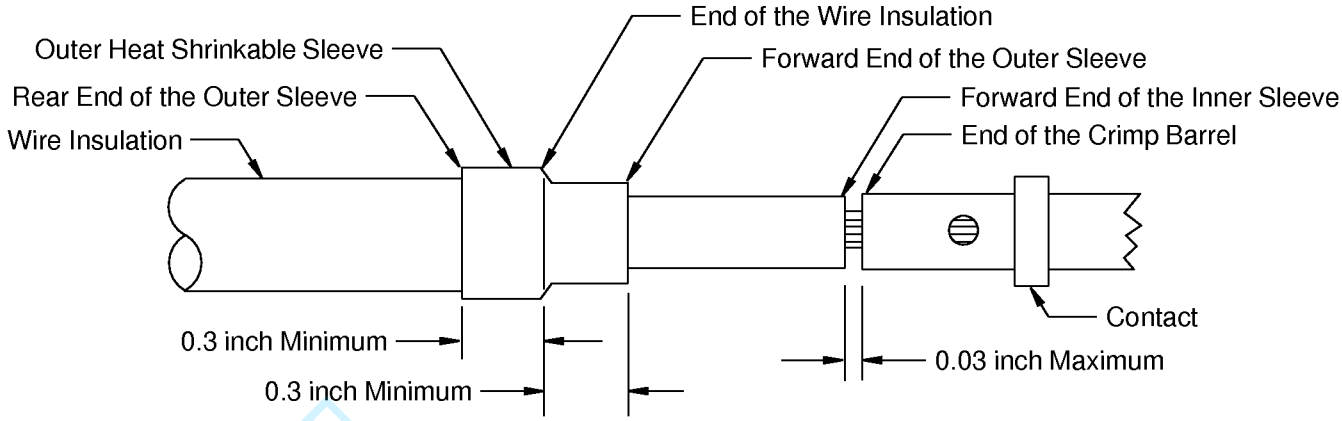

POSITION OF THE OUTER HEAT SHRINKABLE SLEEVE
Figure 70

(d) Shrink the outer sleeve into its position.

Refer to:

- Figure 70
- Subject 20-10-14 for the procedure to shrink a heat shrinkable sleeve.

Make sure that:

- The forward end of the outer sleeve extends 0.3 inch minimum from the end of the insulation of the wire
- The outer sleeve makes an overlap of 0.3 inch or more with the insulation of the wire.

E. Wire Preparation - Increase of the O.D. of the Wire - Unshielded Wire

(1) Put a 0.75 inch ±0.05 inch length of the specified sleeve on the wire:

NOTE: If the sleeve is not specified, make a selection of a Grade B, Class 1 heat shrinkable sleeve from Subject 20-00-11.

Make sure that the sleeve has the smallest diameter that will fit over the wire.

(2) Push the sleeve forward until the forward end of the sleeve is 0 inch to 0.06 inch from the end of the insulation of the wire. Refer to Figure 71.

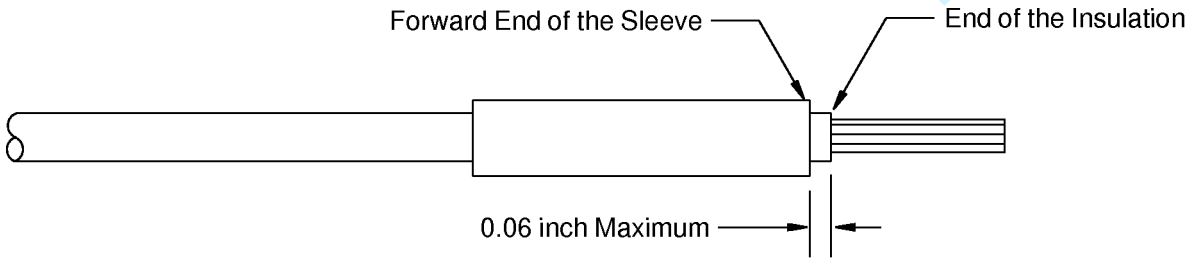

POSITION OF THE SLEEVE ON THE WIRE
Figure 71

(3) Shrink the sleeve into its position.

BOEING PROPRIETARY - Copyright © Unpublished Work - See title page for details
For training purposes only!

Refer to:

- Figure 71
- Subject 20-10-14 for the procedure to shrink a heat shrinkable sleeve.

Make sure that:

- The sleeve does not move on the wire
- The forward end of the sleeve is not farther than 0.06 inch from the end of the insulation of the wire

(4) If more sleeves are specified, do Step (1) through Step (3) again.

F. Wire Preparation - Increase of the O.D. of the Wire - Shielded Wire

(1) Put a 0.75 inch ±0.05 inch length of the specified sleeve on the wire.

NOTE: If the sleeve is not specified, make a selection of a Grade B, Class 1 heat shrinkable sleeve from Subject 20-00-11.

Make sure that the sleeve has the smallest diameter that will fit over the wire.

NOTE: If the location of a shield termination prevents the correct position of the sleeve, the length of the sleeve can be decreased.

(2) If a 0.75 inch ±0.05 inch length of sleeve is not possible, remove the necessary length of the sleeve to make the distance from the rear end of the sleeve to the forward end of the shield termination sleeve equal to 0 inch to 0.12 inch.

(3) Push the sleeve forward until the forward end of the sleeve is 0 inch to 0.06 from the end of the insulation of the wire. Refer to Figure 72.

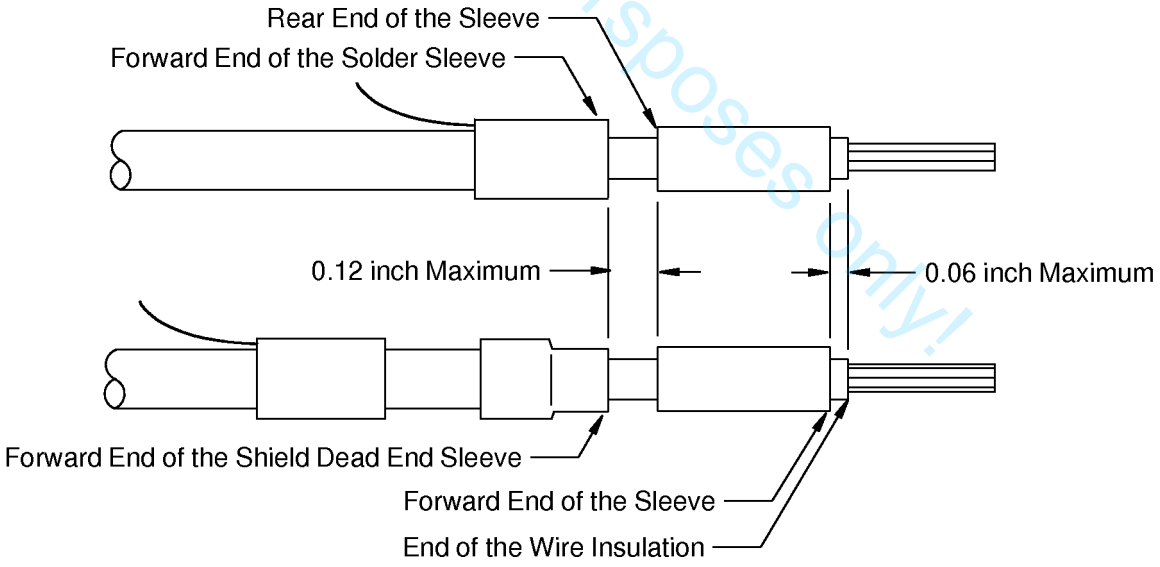

POSITION OF THE SLEEVE ON THE WIRE
Figure 72

(4) Shrink the sleeve into its position.

For training purposes only!

BOEING PROPRIETARY - Copyright © Unpublished Work - See title page for details

Refer to:

- Figure 72
- Subject 20-10-14 for the procedure to shrink a heat shrinkable sleeve.

Make sure that:

- The sleeve does not move on the wire
- The forward end of the sleeve is not farther than 0.06 inch from the end of the insulation of the wire
- The rear end of the sleeve is not farther than 0.12 inch from the forward end of the shield termination sleeve.

(5) If more sleeves are specified, do Step (1) through Step (4) again.

G. Wire Preparation - Decrease of the O.D. of the Wire

NOTE: If the O.D. of the wire insulation is larger than the O.D. of the contact crimp barrel, it is necessary to decrease the O.D. of the wire.

(1) If the decrease of the O.D. of the wire with one heat shrinkable sleeve is specified:

(a) Remove 1.25 inches ±0.06 inch of insulation from the end of the wire. Refer to Figure 73.

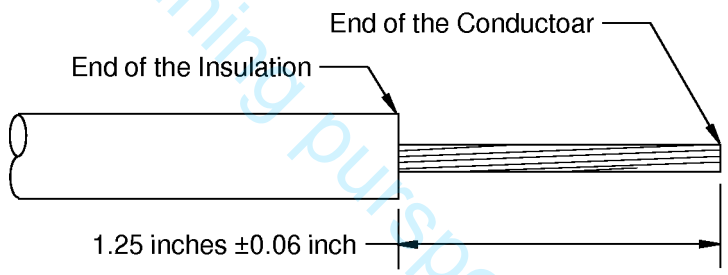

INSULATION REMOVAL LENGTH
Figure 73

(b) Put a 1.6 inch ±0.2 inch length of the heat shrinkable sleeve on the wire.

(2) If:

- The decrease of the O.D. of the wire with two heat shrinkable sleeves is specified, or
- The O.D. of the wire insulation is larger than the O.D. of the crimp barrel of the contact:

(a) Remove 1.55 inches ±0.06 inch of insulation from the end of the wire. Refer to Figure 74.

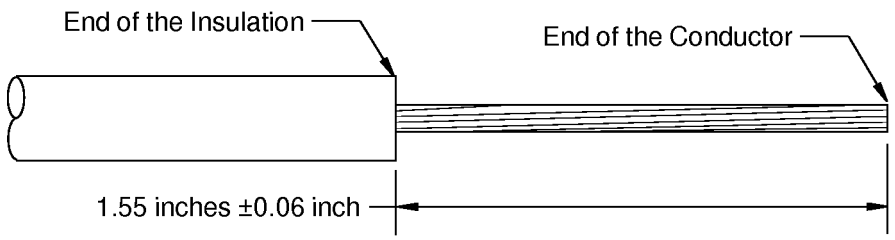

INSULATION REMOVAL LENGTH
Figure 74

For training purposes only.

BOEING PROPRIETARY - Copyright © Unpublished Work - See title page for details

NOTE: If the sleeves are not specified, make a selection of a Grade B, Class 1 heat shrinkable sleeve from Subject 20-00-11.

Make sure that the sleeves have the smallest diameter that will fit on the wire insulation.

(b) Put a 0.8 inch ±0.1 inch length of the outer heat shrinkable sleeve on the wire.

(c) Put a 1.3 inch ±0.1 inch length of the inner heat shrinkable sleeve on the wire.

(3) Move each sleeve away from the end of the wire.

H. Assembly of EPXB Contacts

Table 36
INSULATION REMOVAL LENGTH

EPXB Contact Size	Wire Size (AWG)	Removal Length L (inch)	
		Target	Tolerance
1616	20	0.24	±0.03
	18	0.24	±0.03
	16	0.24	±0.03

Table 37
CONTACT CRIMP TOOLS

EPXB Contact Size	Wire Size (AWG)	Crimp Tool			
		Basic Unit		Locator	
		Part Number	Setting	Part Number	Color
1616	20	M22520/1-01	4	282581013	-
	18	M22520/1-01	5	282581013	-
	16	M22520/1-01	6	282581013	-

(1) Remove the necessary length of insulation from the end of the wire.

Refer to:

- Table 36
- Subject 20-00-15 for the procedure to remove the insulation

(2) Make a selection of a crimp tool from Table 37.

(3) Put the end of the wire in the crimp barrel of the contact. Refer to Figure 75.

Make sure that:

- All of the strands of the conductor are in the crimp barrel
- The conductor can be seen in the inspection hole
- The insulation of the wire is not in the crimp barrel
- The distance from the end of the insulation to the end of the crimp barrel is not more than 0.03 inch.

For training purposes only!

BOEING PROPRIETARY - Copyright © Unpublished Work - See title page for details

ASSEMBLY OF BACI10AL, BACI10AM, AND BACI10AP RECTANGULAR CONNECTOR INSERTS

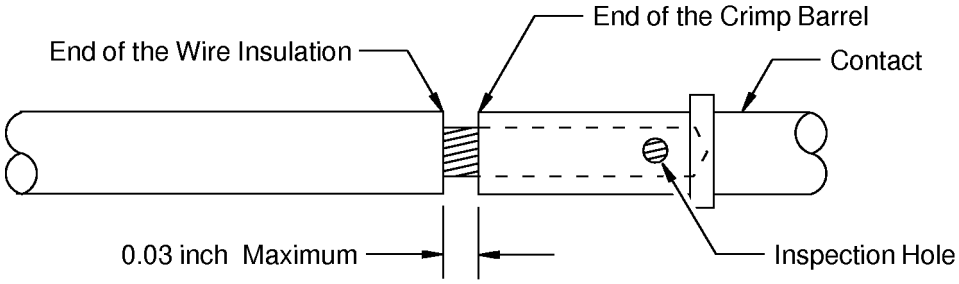

POSITION OF THE WIRE IN THE CRIMP BARREL OF THE CONTACT
Figure 75

(4) Crimp the contact.

Make sure that:

- All of the strands of the conductor are in the crimp barrel
- The conductor can be seen in the inspection hole
- The insulation of the wire is not in the crimp barrel
- The distance from the end of the insulation to the end of the crimp barrel is not more than 0.03 inch.

I. Assembly of Size 0505 or 0508 Power Contacts

NOTE: The contact size previously referred to as 0508 is now referred to as 0505.

NOTE: The largest wire that can be terminated in the size 05 crimp barrel is AWG 8.

Table 38
INSULATION REMOVAL LENGTH

Wire Size (AWG)	Contact Size	Removal Length L (inch)	
		Target	Tolerance
10	0505	0.40	±0.03
8	0505	0.40	±0.03

For training purposes only!

BOEING PROPRIETARY - Copyright © Unpublished Work - See title page for details

ASSEMBLY OF BACI10AL, BACI10AM, AND BACI10AP RECTANGULAR CONNECTOR INSERTS

Table 39
CONTACT CRIMP TOOLS AND NECESSARY FILLER WIRE

Contact Size	Primary Wire Size (AWG)	Filler Wire		Crimp Tool		
		Size (AWG)	Quantity	Basic Unit	Die	Locator
0505	16	12	2	M22520/23-01	M22520/23-02	282557020
				PICO400B	414DA-8N	282557020
						4046A
	14	10	1	M22520/23-01	M22520/23-02	282557020
				PICO400B	414DA-8N	282557020
						4046A
	12	12	1	M22520/23-01	M22520/23-02	282557020
				PICO400B	414DA-8N	282557020
						4046A
0505	10	-	0	M22520/23-01	M22520/23-02	282557020
				PICO400B	414DA-8N	282557020
						4046A
	8	-	0	M22520/23-01	M22520/23-02	282557020
				PICO400B	414DA-8N	282557020
						4046A

Table 40
HEAT SHRINKABLE SLEEVE

Wire Size (AWG)	Heat Shrinkable Sleeve			
	Diameter (inch)	Length (inch)		Material
		Target	Tolerance	
-	3/8	0.65	±0.10	Grade B, Class 1 Heat Shrinkable Sleeve from Subject 20-00-11
12	1/4	1.25	±0.05	
14				
16	3/16	1.25	±0.05	

(1) Cut the end of the wire perpendicular to the longitudinal axis of the wire.

(2) If the contact is supplied with a blue intermediate seal boot:

Refer to Figure 76.

For training purposes only!

BOEING PROPRIETARY - Copyright © Unpublished Work - See title page for details

ASSEMBLY OF BACI10AL, BACI10AM, AND BACI10AP RECTANGULAR CONNECTOR INSERTS

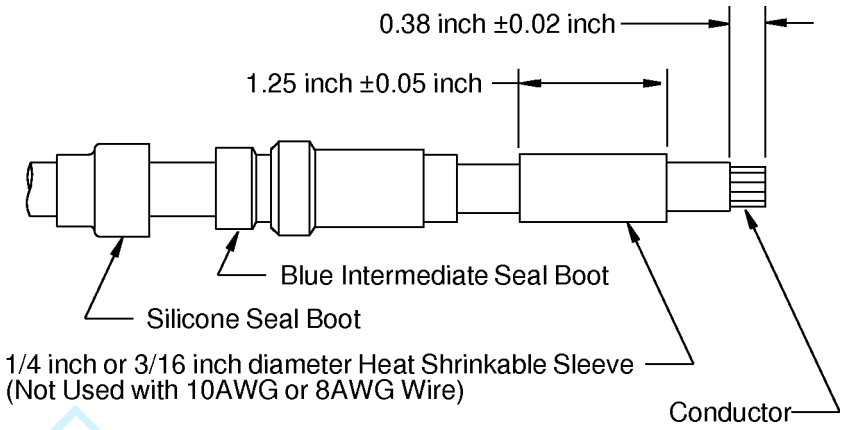

WIRE PREPARATION - BLUE INTERMEDIATE SEAL BOOT
Figure 76

(a) Put the flexible silicone seal boot on the cable.

Make sure that the larger end of the silicone seal boot points forward toward the end of the wire. Refer to Figure 76.

(b) Put the blue intermediate seal boot on the wire.

Make sure that the longer end of the intermediate seal boot points forward toward the end of the wire. Refer to Figure 76.

(3) If the contact is supplied with an amber intermediate seal boot:

Refer to Figure 77.

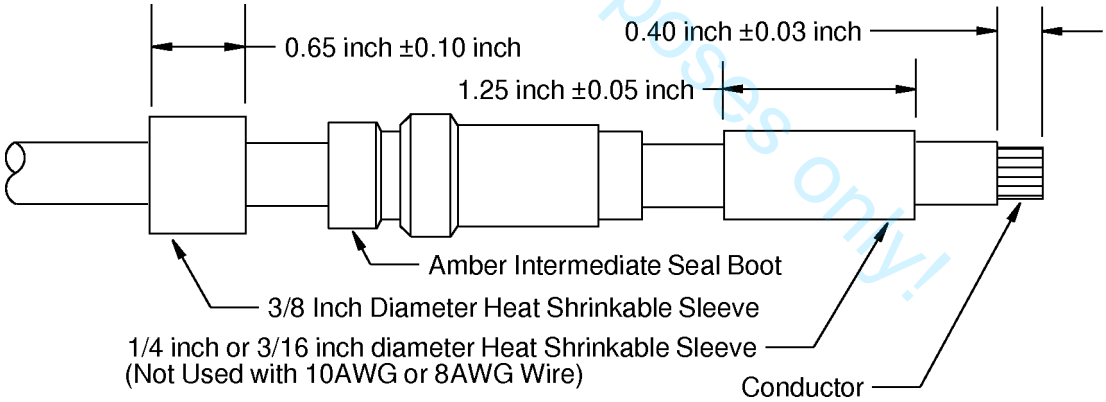

WIRE PREPARATION - AMBER INTERMEDIATE SEAL BOOT
Figure 77

(a) Keep these parts from the contact kit:
- The contact
- The intermediate seal boot.

(b) Discard the flexible silicone seal boot.

For training purposes only!

BOEING PROPRIETARY - Copyright © Unpublished Work - See title page for details

(c) Make a selection of a 3/8 inch diameter Grade B, Class 1 heat shrinkable sleeve from Subject 20-00-11.

(d) Put a 0.65 inch ± 0.10 inch length of the 3/8 inch diameter sleeve on the wire.

(e) Put the amber intermediate seal boot on the wire.

Make sure that the longer end of the amber seal boot points forward toward the end of the wire. Refer to Figure 77.

(4) If the wire size is AWG 12 or 14, make a selection of a 1/4 inch diameter Grade B, Class 1 heat shrinkable sleeve from Subject 20-00-11.

(5) If the wire size is AWG 12 or 14 put a 1.25 inch ± 0.05 inch length of the 1/4 inch diameter sleeve on the wire. Refer to Table 39.

(6) If the wire size is AWG 16, make a selection of a 3/16 inch diameter Grade B, Class 1 heat shrinkable sleeve from Subject 20-00-11.

(7) If the wire size is AWG 16, put a 1.25 inch ± 0.05 inch length of the 3/16 inch diameter sleeve on the wire. Refer to Table 39.

(8) Remove 0.40 inch ± 0.03 inch of the insulation from the end of the wire.

Refer to:

- Figure 76 if the contact is supplied with a blue intermediate seal boot
- Figure 77 if the contact is supplied with an amber intermediate seal boot
- Subject 20-00-15 for the insulation removal procedure.

(9) Make a selection of a crimp tool from Table 39.

(10) Put the wire and the necessary filler wire in the contact crimp barrel of the contact. Refer to Figure 78.

Make sure that:

- You can see the conductor strands in the inspection hole
- The maximum distance from the end of the wire insulation to the end of the contact is 0.03 inch.

NOTE: The filler wire must be the same wire type as the primary wire.

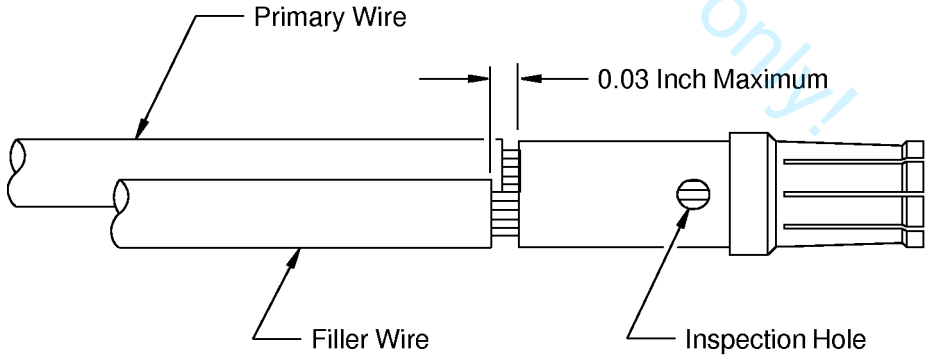

THE PRIMARY WIRE AND THE FILLER WIRE IN THE CRIMP BARREL
Figure 78

For training purposes only!

BOEING PROPRIETARY - Copyright © Unpublished Work - See title page for details

ASSEMBLY OF BACI10AL, BACI10AM, AND BACI10AP RECTANGULAR CONNECTOR INSERTS

(11) Crimp the contact.

NOTE: Deformation of the inspection hole is permitted if you can see the conductor strands in the hole.

(12) If the contact has a filler wire, carefully remove the unwanted length of the filler wire as close as possible to the end of the crimp barrel. Refer to Figure 79.

CAUTION: DO NOT CUT OR CAUSE DAMAGE TO THE STRANDS OF THE PRIMARY WIRE. DAMAGE TO THE CONDUCTOR CAN CAUSE UNSATISFACTORY PERFORMANCE OF THE WIRE.

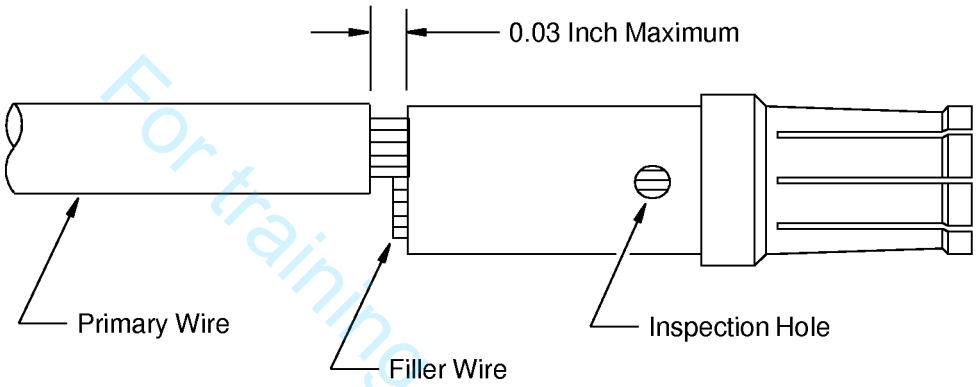

UNWANTED LENGTH OF THE FILLER WIRE REMOVED
Figure 79

(13) If the primary wire size is AWG 12, 14, or 16, push the 1/4 or 3/16 inch diameter sleeve forward, as close as possible to the crimp barrel of the contact.

(14) Shrink the sleeve into its position.

Refer to:

- Figure 80
- Subject 20-10-14.

(15) If the contact has a silicone seal boot and a blue intermediate seal boot, Let the silicone seal boot and the blue intermediate seal boot stay on the wire, away from the contact, until the contact is installed in a connector insert. Refer to Figure 80.

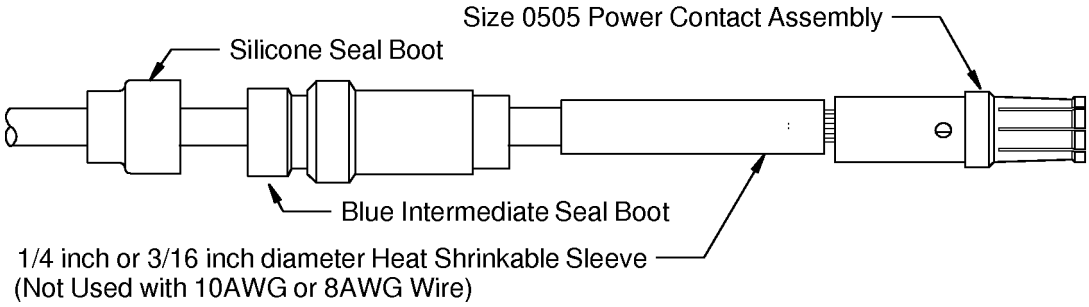

POSITION OF THE BLUE INTERMEDIATE SEAL BOOT
Figure 80

BOEING PROPRIETARY - Copyright © Unpublished Work - See title page for details
For training purposes only!

ASSEMBLY OF BACI10AL, BACI10AM, AND BACI10AP RECTANGULAR CONNECTOR INSERTS

(16) If the contact has an amber intermediate seal boot:

(a) Push the amber seal boot forward onto the contact body until the forward edge of the seal boot is 0.22 inch ± 0.03 inch from the rear edge of the shoulder of the contact. Refer to Figure 81.

(b) Push the 3/8 inch diameter sleeve forward on the intermediate seal boot. Refer to Figure 81.

Make sure that the forward edge of the 3/8 inch diameter sleeve is against the shoulder of the intermediate seal boot.

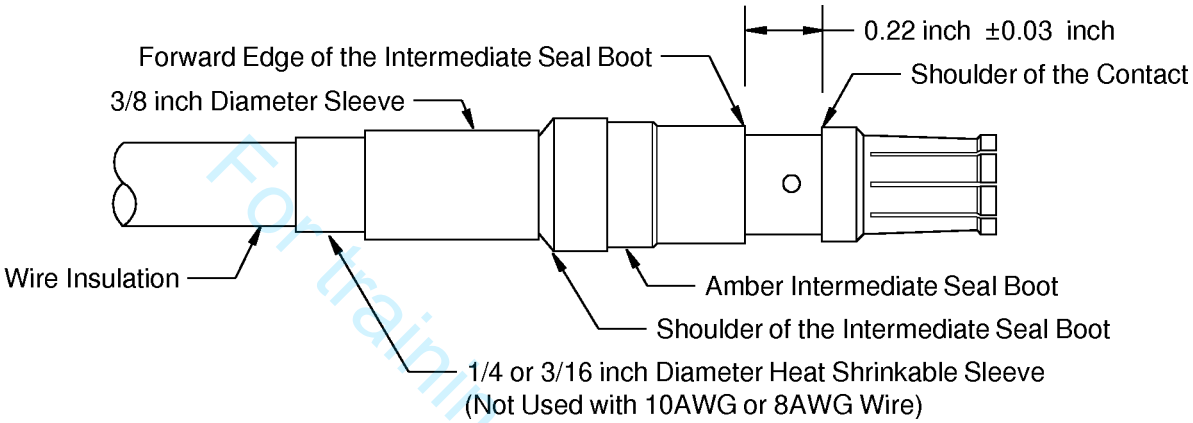

POSITION OF THE AMBER INTERMEDIATE SEAL BOOT AND THE HEAT SHRINKABLE SLEEVES
Figure 81

(c) Shrink the 3/8 inch diameter sleeve into its position.

Refer to:

- Figure 81
- Subject 20-10-14.

J. Assembly of Size 5 Coax Contacts

Table 41
COAX CONTACT CENTER CONTACT CRIMP TOOLS

Basic Unit		Locator
Part Number	Setting	
M22520/2-01	7	282 581 008

Table 42
COAX CONTACT FERRULE CRIMP TOOLS

Coax Contact	Crimp Tool		
	Basic Unit	Die	
		Part Number	Cavity
BACC47FT0F	M22520/5-01	M22520/5-05	B
BACC47FT0G	M22520/5-01	M22520/5-45	B

BOEING PROPRIETARY - Copyright © Unpublished Work - See title page for details
For training purposes only!

ASSEMBLY OF BACI10AL, BACI10AM, AND BACI10AP RECTANGULAR CONNECTOR INSERTS

Table 42 (continued)

Coax Contact	Crimp Tool		
	Basic Unit	Die	
		Part Number	Cavity
BACC47FU0F	M22520/5-01	M22520/5-05	B
BACC47FU0G	M22520/5-01	M22520/5-45	B

(1) Make a selection of a center contact crimp tool from Table 41.

(2) Make a selection of a ferrule crimp tool from Table 42.

(3) Cut the cable to make the end of the cable perpendicular to the longitudinal axis of the cable.

(4) If the contact is supplied with a blue intermediate seal boot, prepare the cable. Refer to Figure 82.

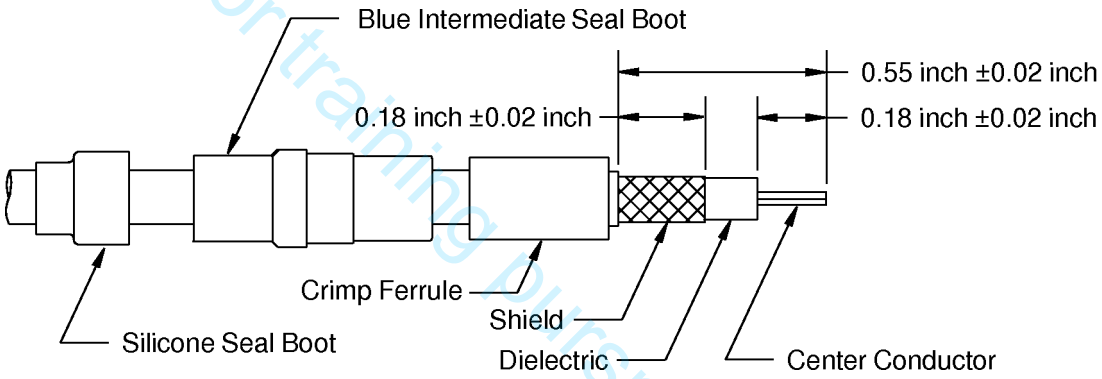

CABLE PREPARATION - BLUE INTERMEDIATE SEAL BOOT
Figure 82

(a) Put these components on the cable:
- The silicone sealing boot
- The blue intermediate seal boot
- The crimp ferrule.

(b) Remove 0.55 inch ± 0.02 inch of cable jacket from the end of the cable.

(c) Remove the necessary length of shield to make the distance from the end of the shield to the end of the cable jacket equal to 0.18 inch ± 0.02 inch.

(d) Remove the necessary length of dielectric to make the distance from the end of the center conductor to the end of the dielectric equal to 0.18 inch ± 0.02 inch.

(5) If the contact is supplied with an amber intermediate seal boot, prepare the cable. Refer to Figure 83.

For training purposes only.

BOEING PROPRIETARY - Copyright © Unpublished Work - See title page for details

ASSEMBLY OF BACI10AL, BACI10AM, AND BACI10AP RECTANGULAR CONNECTOR INSERTS

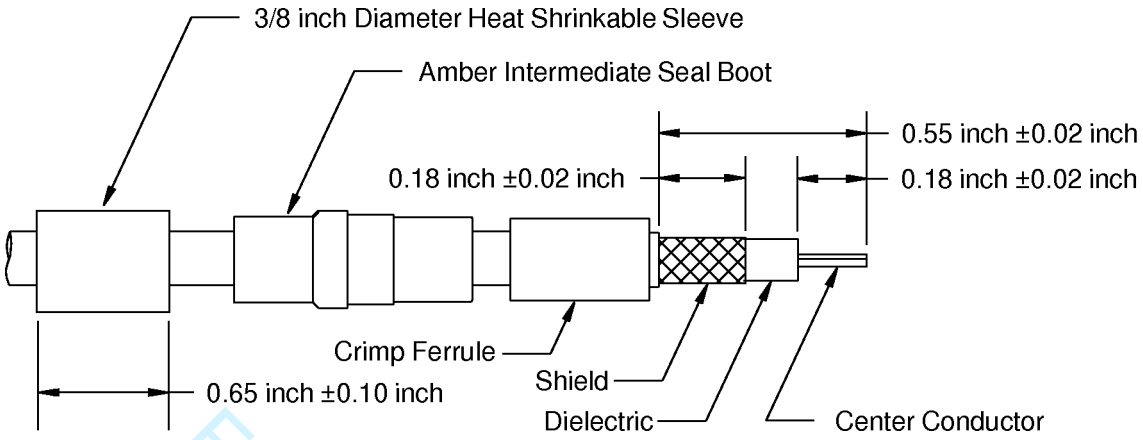

CABLE PREPARATION - AMBER INTERMEDIATE SEAL BOOT
Figure 83

(a) Make a selection of a Grade B, Class 1 Heat Shrinkable Sleeve from Subject 20-00-11.

(b) Put these components on the cable:
- A 0.65 inch ± 0.10 inch length of 3/8 inch diameter heat shrinkable sleeve
- The amber intermediate seal boot
- The crimp ferrule.

(c) Remove 0.55 inch ± 0.02 inch of cable jacket from the end of the cable.

(d) Remove the necessary length of shield to make the distance from the end of the shield to the end of the cable jacket equal to 0.18 inch ± 0.02 inch.

(e) Remove the necessary length of dielectric to make the distance from the end of the center conductor to the end of the dielectric equal to 0.18 inch ± 0.02 inch.

(6) Prepare the shield. Refer to Figure 84.

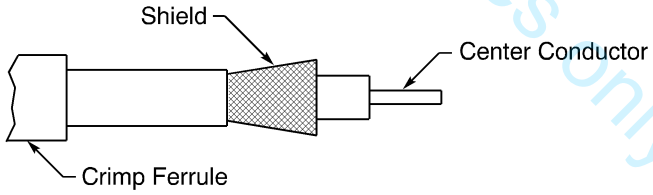

SHIELD PREPARATION
Figure 84

(a) Move the strands of the round conductor shield apart.

(b) Move the strands of the flat conductor shield apart.

(7) Put the center conductor into the crimp barrel of the center contact. Refer to Figure 85.

For training purposes only!

BOEING PROPRIETARY - Copyright © Unpublished Work - See title page for details

Make sure that:

- All of the strands are in the crimp barrel of the center contact.
- The strands of the center conductor can be seen in the inspection hole
- The distance between the dielectric and end of the crimp barrel is not more than 0.03 inch

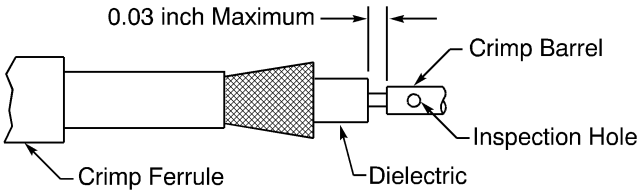

POSITION OF THE CENTER CONDUCTOR IN THE CRIMP BARREL
Figure 85

(8) Crimp the contact.

Make sure that:

- All of the strands are in the crimp barrel of the center contact.
- The strands of the center conductor can be seen in the inspection hole
- The distance between the dielectric and end of the crimp barrel is not more than 0.03 inch

(9) Push the outer contact onto the center contact assembly. Refer to Figure 86.

Make sure that the strands of the shield stay on the outer surface of the crimp barrel until the rear end of the crimp barrel is tight against the end of the jacket.

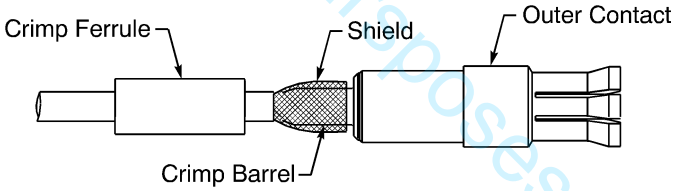

POSITION OF THE OUTER CONTACT
Figure 86

(10) Put the strands of the shield against the outer surface of the crimp barrel.

(11) Push the crimp ferrule forward until the forward end of the crimp ferrule is against the shoulder of the crimp barrel. Refer to Figure 87.

Make sure that the distance between the forward end of the crimp ferrule and the shoulder of the crimp barrel is not more than 0.02 inch.

For training purposes only!

BOEING PROPRIETARY - Copyright © Unpublished Work - See title page for details

ASSEMBLY OF BACI10AL, BACI10AM, AND BACI10AP RECTANGULAR CONNECTOR INSERTS

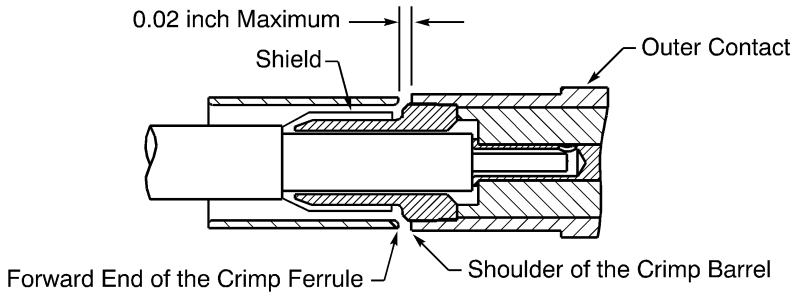

POSITION OF THE CRIMP FERRULE ON THE SHIELD AND THE CRIMP BARREL
Figure 87

(12) Crimp the ferrule.

Make sure that the distance between the forward end of the crimp ferrule and the shoulder of the crimp barrel is not more than 0.02 inch.

(13) If the contact has a a silicone seal boot and a blue intermediate seal boot, Let the silicone seal boot and the blue intermediate seal boot stay on the cable, away from the contact, until the contact is installed in a connector insert. Refer to Figure 88.

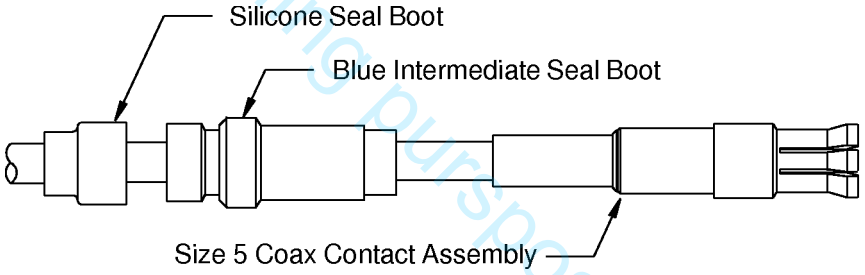

POSITION OF THE BLUE INTERMEDIATE SEAL BOOT
Figure 88

(14) If the contact is supplied with an amber intermediate seal boot:

(a) Push the amber intermediate seal boot forward onto the contact body until the forward edge of the seal boot is 0.22 inch ± 0.03 inch from the rear edge of the shoulder of the contact. Refer to Figure 89.

(b) Push the 3/8 inch diameter sleeve forward on the intermediate seal boot. Refer to Figure 89.

Make sure that the forward edge of the 3/8 inch diameter sleeve is against the shoulder of the intermediate seal boot.

For training purposes only!

BOEING PROPRIETARY - Copyright © Unpublished Work - See title page for details

ASSEMBLY OF BACI10AL, BACI10AM, AND BACI10AP RECTANGULAR CONNECTOR INSERTS

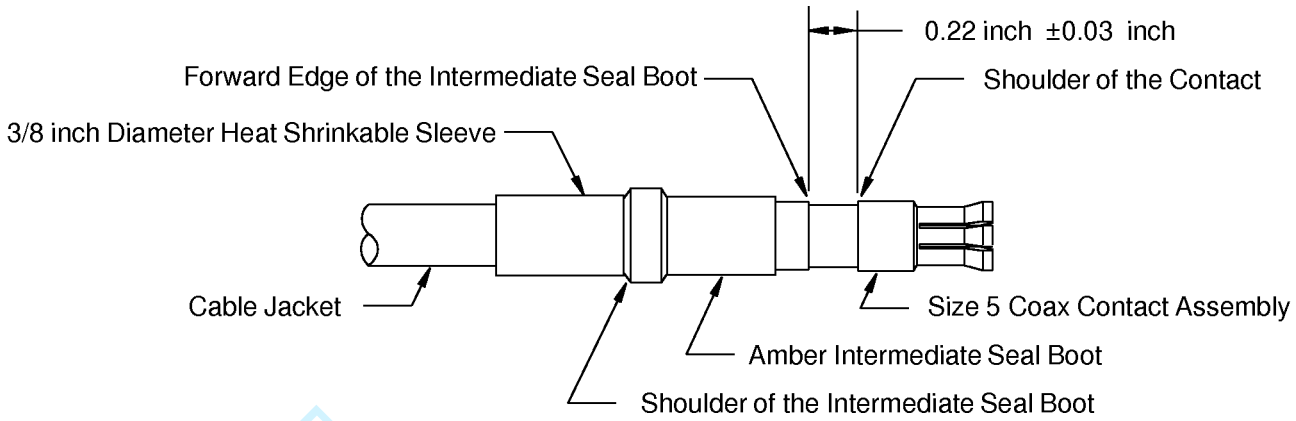

POSITION OF THE AMBER INTERMEDIATE SEAL BOOT AND THE HEAT SHRINKABLE SLEEVES
Figure 89

(c) Shrink the 3/8 inch diameter sleeve into its position.

Refer to:

- Figure 89.
- Subject 20-10-14.

K. Assembly of S280W554-111 and S280W554-113 Size 8 Coax Contacts

Table 43
CENTER CONTACT CRIMP TOOLS

Coax Contact Size	Crimp Tool		
	Basic Unit		Locator
	Part Number	Setting	
8	M22520/2-01	5	K1025S

Table 44
OUTER CONTACT CRIMP TOOLS

Coax Contact Size	Crimp Tool		
	Basic Unit	Die	
		Part Number	Cavity
8	M22520/5-01	Y793A	A

(1) Make a selection of a center contact crimp tool from Table 43.

(2) Make a selection of an outer contact crimp tool from Table 44.

(3) Put these components on the cable:

- The seal boot and cable support assembly
- The outer ferrule.

Refer to Figure 90.

For training purposes only!

BOEING PROPRIETARY - Copyright © Unpublished Work - See title page for details

ASSEMBLY OF BACI10AL, BACI10AM, AND BACI10AP RECTANGULAR CONNECTOR INSERTS

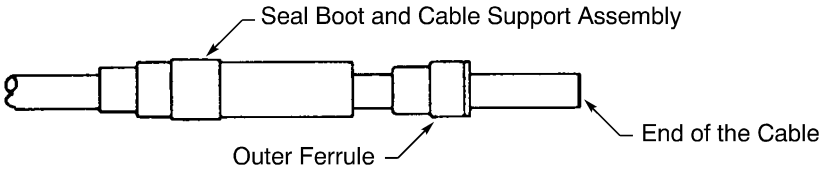

POSITION OF THE SEAL BOOT AND THE OUTER FERRULE ON THE CABLE
Figure 90

(4) Remove 0.62 inch ± 0.02 inch of jacket from the end of the cable. Refer to Figure 91.

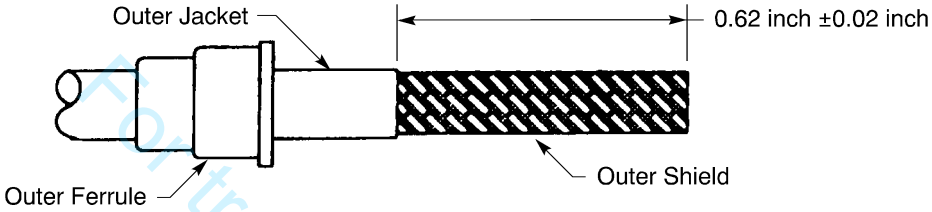

OUTER JACKET REMOVAL LENGTH
Figure 91

(5) Cut the outer round shield to make the distance from the end of the cable jacket to the end of the round shield equal to 0.20 inch ± 0.02 inch.

Refer to Figure 92.

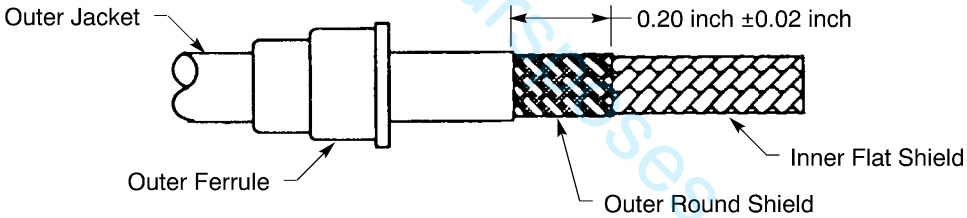

REMOVAL OF THE OUTER ROUND SHIELD
Figure 92

(6) Loosen the round shield and fold it back on the cable jacket.

(7) Cut the inner flat shield to align the edge of the shield with the edge of the folded back outer round shield. Refer to Figure 93.

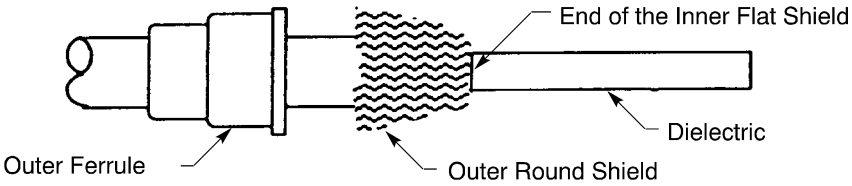

OUTER ROUND SHIELD FOLDED BACK
Figure 93

For training purposes only!

BOEING PROPRIETARY - Copyright © Unpublished Work - See title page for details

ASSEMBLY OF BACI10AL, BACI10AM, AND BACI10AP RECTANGULAR CONNECTOR INSERTS

(8) Push the inner ferrule assembly rearward on the dielectric until it is against the edge of the round shield. Refer to Figure 94.

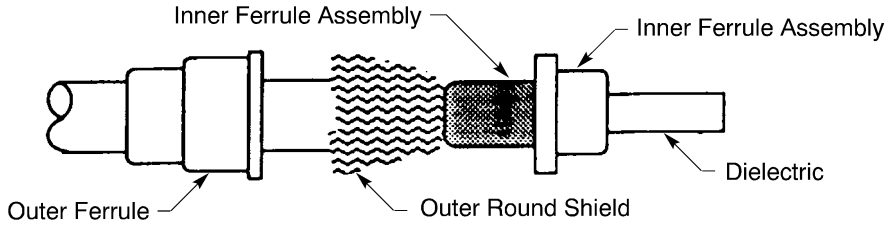

POSITION OF THE INNER FERRULE ASSEMBLY ON THE CABLE
Figure 94

(9) Remove the length of the dielectric between the end of the inner ferrule assembly and the end of the cable. Refer to Figure 95.

Make sure that the distance from the end of the dielectric to the edge of the inner ferrule assembly is not greater than 0.02 inch.

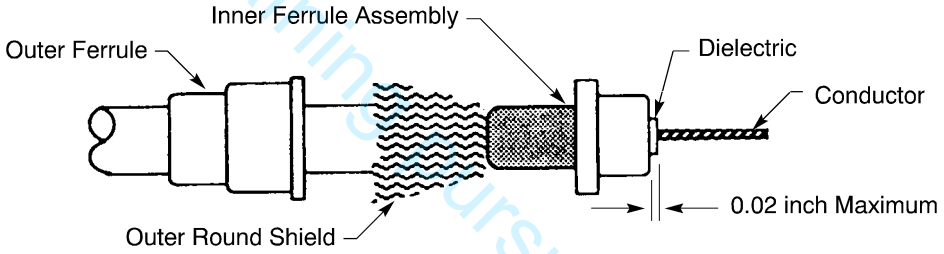

DIELECTRIC REMOVAL
Figure 95

(10) Put the conductor into the crimp barrel of the center contact.

Make sure that:

- All of the strands of the conductor are in the center contact
- The conductor can be seen in the inspection hole.

(11) Push the center contact rearward toward the outer ferrule until the inner ferrule assembly is against the outer round shield. Refer to Figure 96.

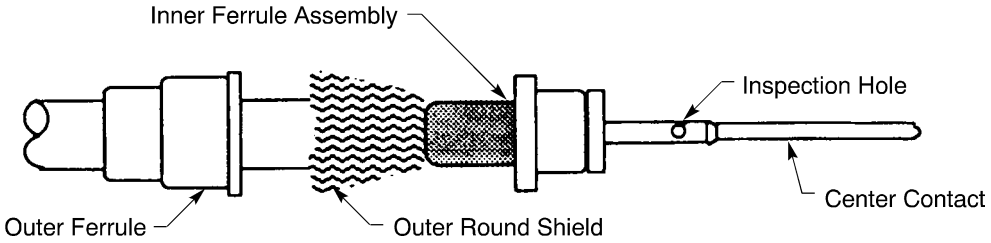

POSITION OF THE CENTER CONTACT ON THE CABLE
Figure 96

(12) Crimp the center contact.

For training purposes only!

BOEING PROPRIETARY - Copyright © Unpublished Work - See title page for details

ASSEMBLY OF BACI10AL, BACI10AM, AND BACI10AP RECTANGULAR CONNECTOR INSERTS

(13) Symmetrically put the outer round shield around the inner ferrule assembly. Refer to Figure 97.

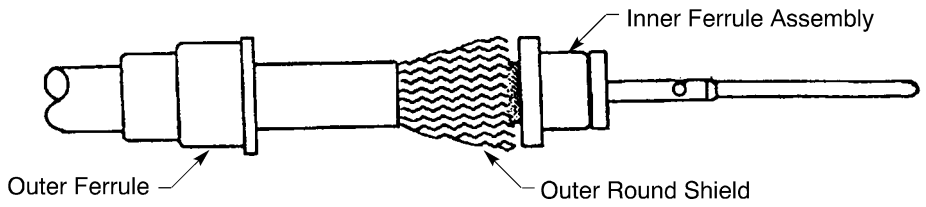

POSITION OF THE OUTER ROUND SHIELD ON THE INNER FERRULE ASSEMBLY
Figure 97

(14) Push the outer ferrule forward until it is against the inner ferrule assembly. Refer to Figure 98.

Make sure that the shield is between the outer ferrule and the inner ferrule assembly.

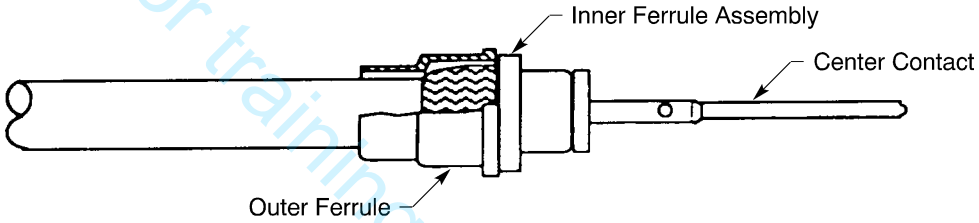

POSITION OF THE OUTER FERRULE AGAINST THE INNER FERRULE ASSEMBLY
Figure 98

(15) Remove the unwanted length of the shield strands.

Make sure that the end of the shield strands aligns with the rear edge of the shoulder of the inner ferrule assembly.

(16) Push the cable and the inner contact assembly into the outer contact assembly until it stops. Refer to Figure 99.

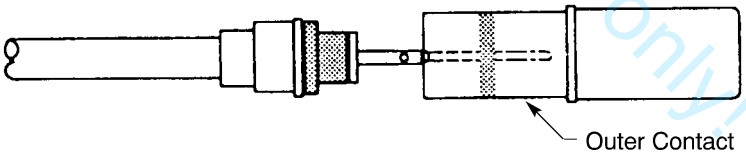

ALIGNMENT OF THE CENTER CONTACT AND THE OUTER CONTACT
Figure 99

(17) Apply pressure on the outer contact toward the outer and inner ferrule and crimp the outer contact. Refer to Figure 100.

Make sure that the outer contact is against the outer ferrule during the crimp operation.

For training purposes only!

BOEING PROPRIETARY - Copyright © Unpublished Work - See title page for details

ASSEMBLY OF BACI10AL, BACI10AM, AND BACI10AP RECTANGULAR CONNECTOR INSERTS

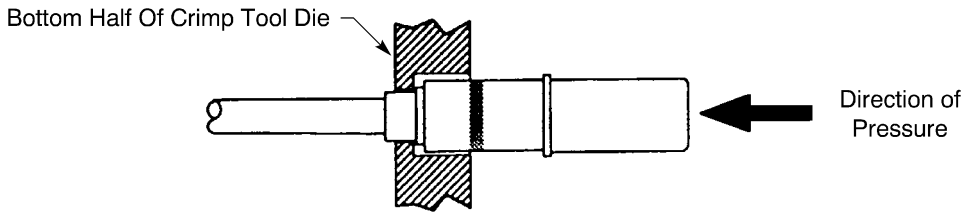

DIRECTION OF PRESSURE DURING THE CRIMP OPERATION
Figure 100

(18) Examine the crimp area of the outer contact.

Make sure that the length of the crimp area on the outer contact is 0.09 inch or longer. Refer to Figure 101.

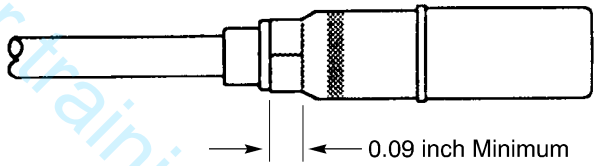

CRIMP AREA OF THE OUTER CONTACT
Figure 101

(19) Push the seal boot and cable support assembly toward the contact assembly until it stops. Refer to Figure 102.

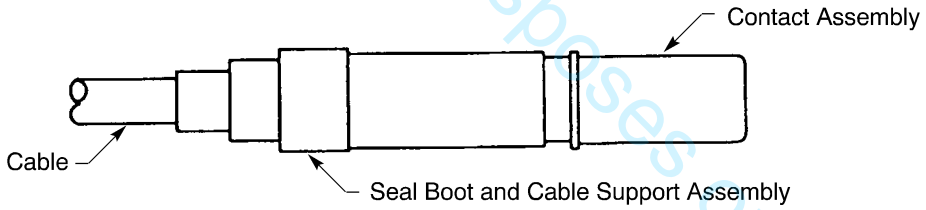

POSITION OF THE SEAL BOOT AGAINST THE CONTACT ASSEMBLY
Figure 102

For training purposes only!

L. Assembly of Tyco 1757624-1 and 1883369-2 Size 8 Coax Contacts to BMS 13-65 Type 0F Coax Cable

Table 45
CENTER CONTACT CRIMP TOOLS

Coax Contact	Crimp Tool		
	Basic Unit		Locator
	Part Number	Setting	
1757624-1	M22520/2-01	5	M22520/2-06
1883369-2	M22520/2-01	5	NONE

BOEING PROPRIETARY - Copyright © Unpublished Work - See title page for details

ASSEMBLY OF BACI10AL, BACI10AM, AND BACI10AP RECTANGULAR CONNECTOR INSERTS

Table 46
OUTER CONTACT CRIMP TOOLS

Coax Contact	Crimp Tool		
	Basic Unit	Die	
		Part Number	Cavity
1757624-1	M22520/5-01	M22520/5-45	B
1883369-2	M22520/5-01	M22520/5-45	B

(1) Make a selection of a center contact crimp tool from Table 45.

(2) Make a selection of an outer contact crimp tool from Table 46.

(3) Discard the seal boot that is included in the coax contact kit.

(4) Put a Tyco 1877626-1 seal boot on the cable. Refer to Figure 103.

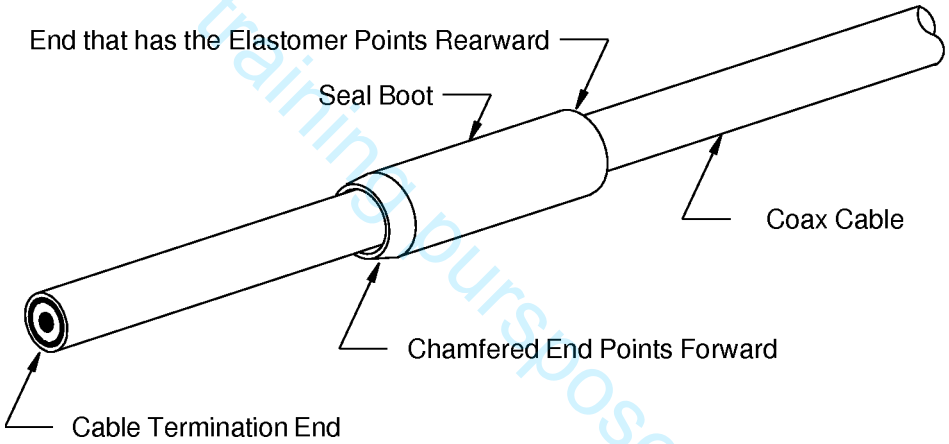

SEAL BOOT ON THE CABLE
Figure 103

(5) Make a selection of a 3/16 inch diameter Grade B, Class 1 heat shrinkable sleeve from Subject 20-00-11.

(6) Put a 0.5 inch ±0.05 inch length of the heat shrinkable sleeve on the cable.

(7) Remove 0.60 inch ±0.03 inch of jacket from the end of the cable.

(8) Shrink the sleeve into its position. Refer to Figure 104.

Make sure that the distance from the end of the cable jacket to the end of the sleeve is 0.33 inch ±0.03 inch.

For training purposes only!

BOEING PROPRIETARY - Copyright © Unpublished Work - See title page for details

ASSEMBLY OF BACI10AL, BACI10AM, AND BACI10AP RECTANGULAR CONNECTOR INSERTS

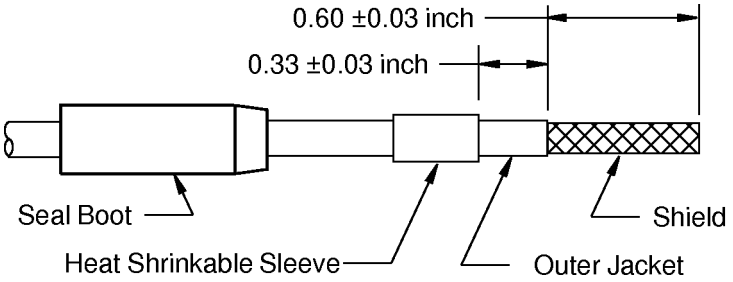

POSITION OF THE HEAT SHRINKABLE SLEEVE ON THE CABLE
Figure 104

(9) Put the ferrule on the cable. Refer to Figure 105.

Make sure that:

- The smaller end of the the ferrule points to the end of the cable
- The end of the ferrule and the end of the cable outer jacket are aligned.

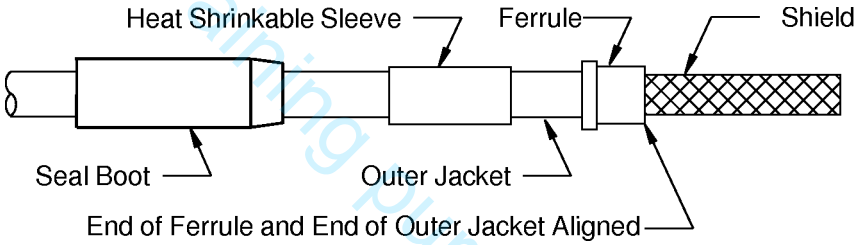

POSITION OF THE FERRULE ON THE CABLE
Figure 105

(10) Loosen the strands of the round shield and fold the round shield back on the ferrule. Refer to Figure 106.

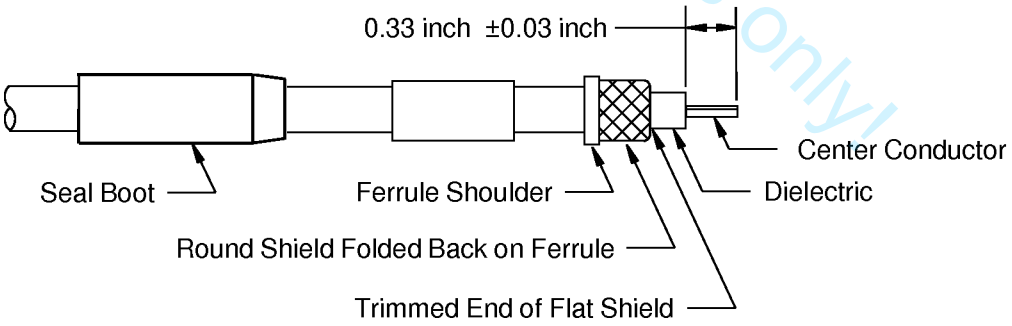

ROUND SHIELD FOLDED BACK ON THE FERRULE
Figure 106

(11) Remove the unwanted length of the round shield strands that extend rearward of the forward edge of the shoulder of the ferrule. Refer to Figure 106.

(12) Cut the inner flat shield to align the trimmed end of the flat shield and the edge of the folded back round shield. Refer to Figure 106.

BOEING PROPRIETARY - Copyright © Unpublished Work - See title page for details
For training purposes only!

(13) Remove 0.33 inch ±0.03 inch of the insulation from the end of the center conductor.

(14) Put the center conductor into the crimp barrel of the center contact. Refer to Figure 107.

Make sure that:

- All of the strands of the center conductor are in the crimp barrel of the center contact
- The conductor can be seen in the inspection hole.

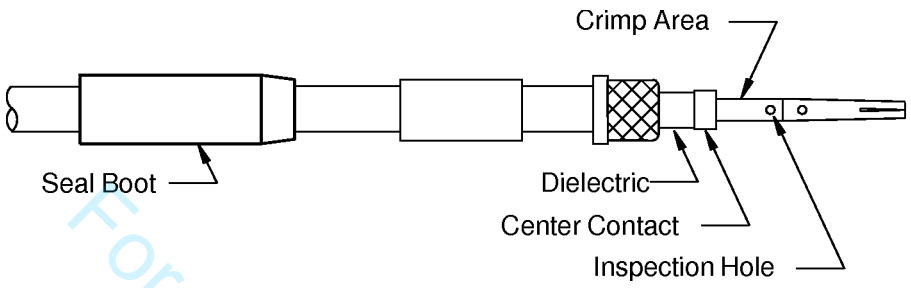

POSITION OF THE CENTER CONTACT ON THE CENTER CONDUCTOR
Figure 107

(15) Crimp the center contact.

Make sure that:

- All of the strands of the conductor are in the crimp barrel of the center contact
- The conductor can be seen in the inspection hole.

(16) Push the cable and the center contact assembly into the outer contact until the distance from the shoulder of the inner ferrule to the edge of the outer contact crimp barrel is less than 0.03 inch. Refer to Figure 108.

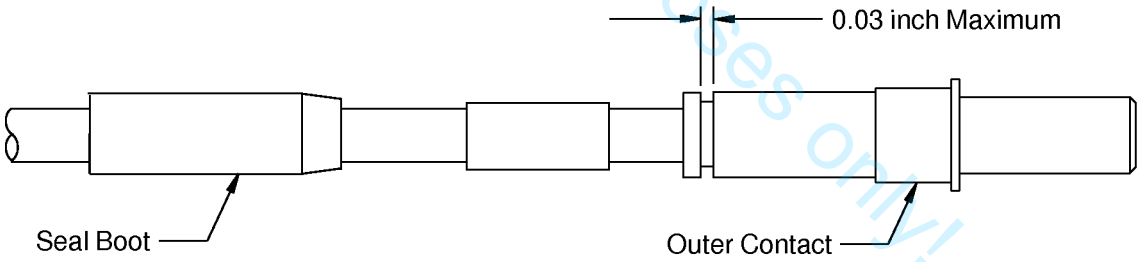

COAX CONTACT ASSEMBLY
Figure 108

(17) Hold the contact assembly together, and at the same time, crimp the outer contact.

Make sure that the distance from the shoulder of the inner ferrule to the edge of the outer contact crimp barrel is less than 0.03 inch. Refer to Figure 108.

(18) Remove the unwanted shield strands that come out from between the outer contact crimp barrel and the shoulder of the ferrule.

(19) Push the seal boot to the contact assembly until it stops.

M. Twinax Cable Preparation and Contact Assembly

This paragraph gives the procedure to prepare the twinax cable and assemble the twinax contact.

BOEING PROPRIETARY - Copyright © Unpublished Work - See title page for details
For training purposes only!

ASSEMBLY OF BACI10AL, BACI10AM, AND BACI10AP RECTANGULAR CONNECTOR INSERTS

Table 47
CRIMP TOOLS FOR THE TWINAX CONTACT INNER CONTACTS

Twinax Cable Component	Twinax Contact			Crimp Tool			
	Code	Component	Conductor Cavity Location	Basic Unit		Die	
				Part Number	Setting	Part Number	Cavity
Blue Wire	Blank	Center Contact	Center	AFM-2	6	-	-
White Wire	R	Inner Ring	Side	M22520/5-01	-	Y797	A

Table 48
CRIMP TOOLS FOR THE TWINAX CONTACT OUTER CONTACT BODY

Twinax Cable Component	Twinax Contact			Crimp Tool		
	Code	Component	Conductor Location	Basic Unit	Die	
					Part Number	Cavity
Shield	C	Outer Contact Body	Outer Contact Body	M22520/5-01	Y797	B

(1) Put the seal boot on the cable. Refer to Figure 109.

Make sure that the larger end of the seal boot is pointed forward to the end of the cable.

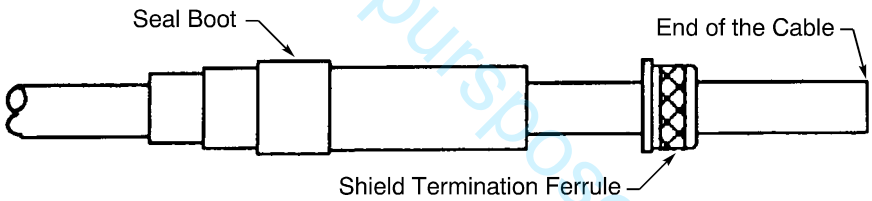

POSITION OF THE SEAL BOOT AND THE FERRULE ON THE CABLE
Figure 109

(2) Put the shield termination ferrule on the cable. Refer to Figure 109.

Make sure that the larger end of the shield termination ferrule is pointed rearward away from the end of the cable.

(3) Remove 0.48 inch ±0.03 inch of the jacket from the end of the cable.

Refer to Figure 110 and Subject 20-00-15.

CAUTION: DO NOT CAUSE DAMAGE TO THE STRANDS OF THE SHIELD. UNSATISFACTORY PERFORMANCE OF THE CABLE CAN OCCUR.

For training purposes only!

BOEING PROPRIETARY - Copyright © Unpublished Work - See title page for details

ASSEMBLY OF BACI10AL, BACI10AM, AND BACI10AP RECTANGULAR CONNECTOR INSERTS

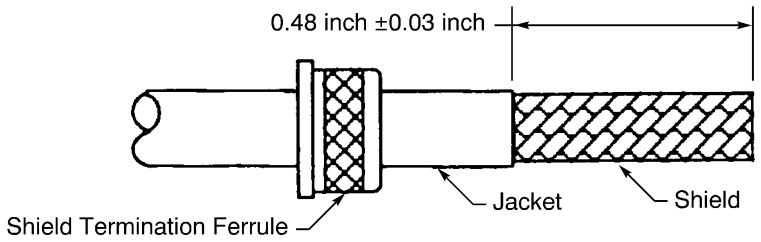

CABLE JACKET REMOVAL LENGTH
Figure 110

(4) Fold the shield back against the jacket of the cable.

(5) Cut the fillers at the necessary location to make the distance from the forward end of the shield to the end of the fillers equal to or less than 0.03 inch. Refer to Figure 111.

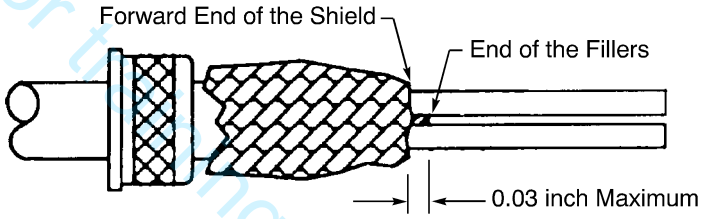

REMOVAL OF THE CABLE FILLERS
Figure 111

(6) Prepare the wires. Refer to Figure 112.

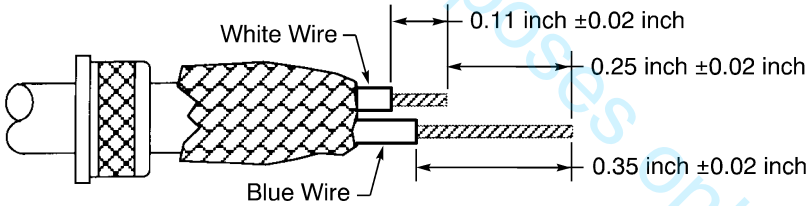

INSULATION REMOVAL LENGTH
Figure 112

(a) Cut the white wire 0.25 inch ±0.02 inch from the end of the wire.

(b) Remove 0.11 inch ±0.02 inch of the insulation from the end of the white wire.

CAUTION: DO NOT CAUSE DAMAGE TO THE CONDUCTOR. UNSATISFACTORY PERFORMANCE OF THE WIRE CAN OCCUR.

(c) Remove 0.35 inch ±0.02 inch of the insulation from the end of the blue wire.

CAUTION: DO NOT CAUSE DAMAGE TO THE CONDUCTOR. UNSATISFACTORY PERFORMANCE OF THE WIRE CAN OCCUR.

(7) Put the insulator bushing on the cable. Refer to Figure 113.

For training purposes only!

BOEING PROPRIETARY - Copyright © Unpublished Work - See title page for details

Make sure that:

- The white wire is in the hole near the edge of the bushing
- The blue wire is in the hole near the center of the bushing
- The bushing is against the shield.

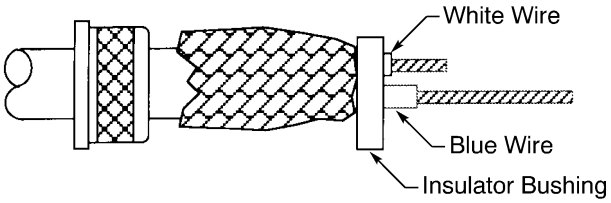

POSITION OF THE INSULATOR BUSHING ON THE CABLE
Figure 113

For training purposes only!

(8) Align the conductor of the blue wire and the longer cavity in the center of the center contact.

(9) Align the conductor of the white wire and the shorter cavity near the side of the center contact.

Make sure that the conductor of the blue wire stays aligned with the longer cavity in the center of the contact.

(10) Put the center contact on the wires. Refer to Figure 114.

Make sure that:

- All of the strands of the conductor of the blue wire are in the longer center cavity
- All of the strands of the conductor of the white wire are in the shorter side cavity
- The conductor of the blue wire can be seen in the inspection hole
- The distance between the center contact and the end of the insulation of the white wire is a maximum of 0.02 inch.

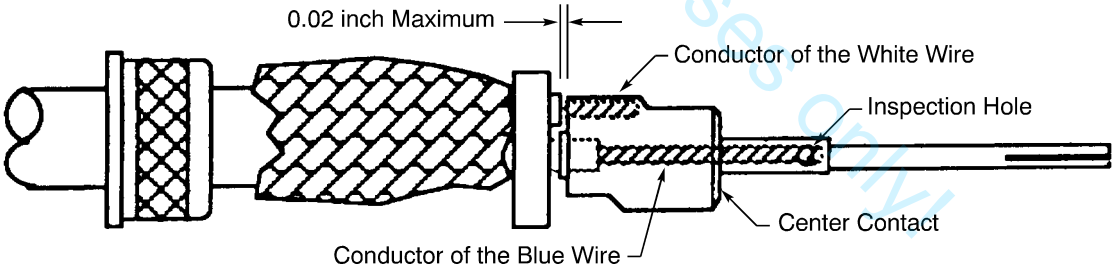

POSITION OF THE CENTER CONTACT ON THE CABLE
Figure 114

(11) Make a selection of a center contact crimp tool for the blue wire from Table 47.

(12) Put the center contact in the crimp tool.

(13) Crimp the contact.

(14) Make a selection of a center contact crimp tool for the white wire from Table 47.

(15) Put the center contact in the crimp tool. Refer to Figure 115.

Make sure that the contact is correctly aligned in the tool.

BOEING PROPRIETARY - Copyright © Unpublished Work - See title page for details

ASSEMBLY OF BACI10AL, BACI10AM, AND BACI10AP RECTANGULAR CONNECTOR INSERTS

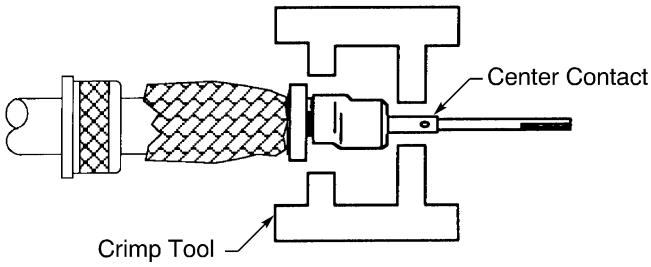

POSITION OF THE CENTER CONTACT IN THE CRIMP TOOL
Figure 115

(16) Crimp the contact.

(17) Examine the crimp area of the contact. Refer to Figure 116.
Make sure that each crimp area does not have a crack.

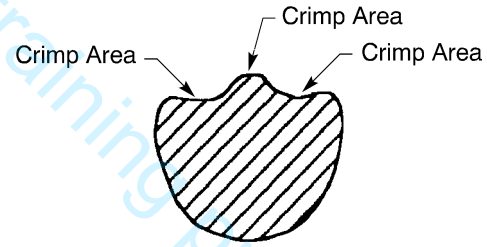

CRIMP AREAS OF THE CENTER CONTACT
Figure 116

(18) Push the shield termination ferrule forward until it is against the insulator bushing. Refer to Figure 117.

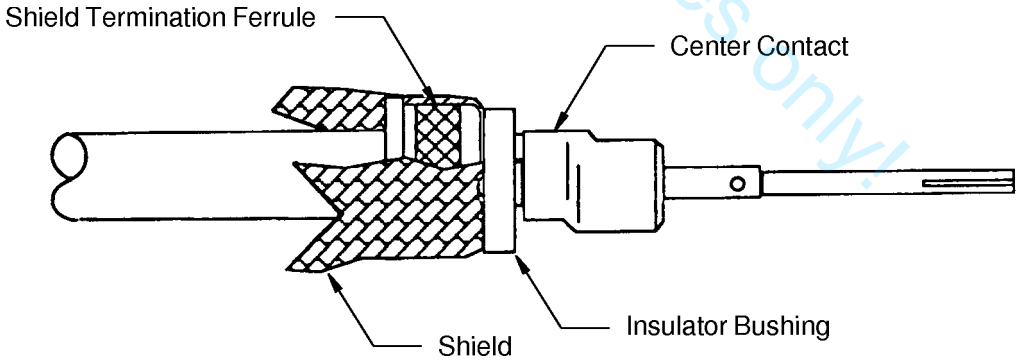

POSITION OF THE FERRULE
Figure 117

(19) Make the shield flat against the outer surface of the ferrule.

(20) Cut the shield at the forward edge of the shoulder of the ferrule. Refer to Figure 118.

For training purposes only!

BOEING PROPRIETARY - Copyright © Unpublished Work - See title page for details

ASSEMBLY OF BACI10AL, BACI10AM, AND BACI10AP RECTANGULAR CONNECTOR INSERTS

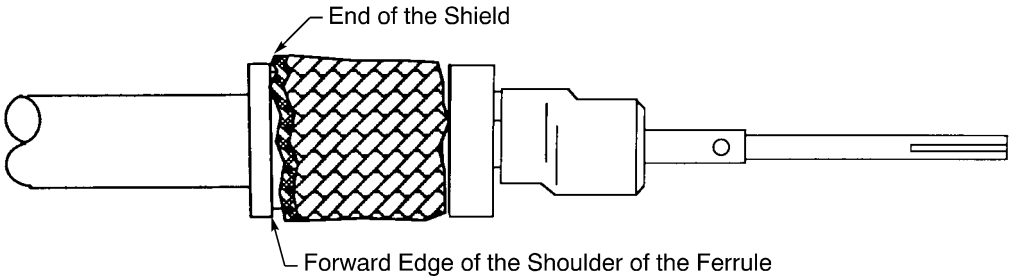

LOCATION OF SHIELD REMOVAL
Figure 118

(21) Make a selection of an outer contact body crimp tool from Table 48.

(22) Align the center contact and the outer body. Refer to Figure 119.

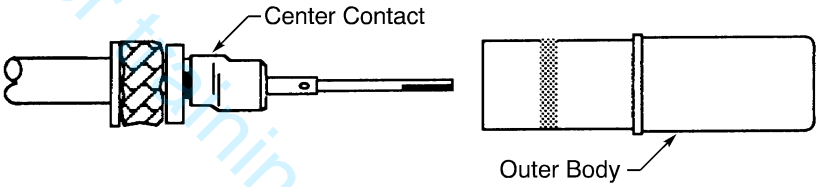

ALIGNMENT OF THE CENTER CONTACT AND THE OUTER BODY
Figure 119

(23) Push the center contact into the outer body until it stops.

Make sure that the rear edge of the outer body is against the shoulder of the ferrule. Refer to Figure 120.

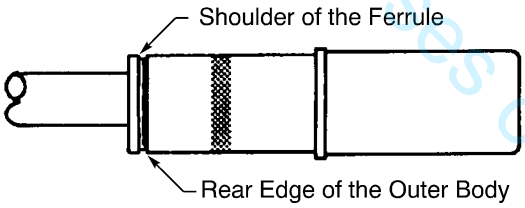

POSITION OF THE OUTER BODY ON THE CENTER CONTACT
Figure 120

(24) Put the contact in the crimp tool. Refer to Figure 121.

Make sure that the contact is in the small groove of the die.

For training purposes only!

BOEING PROPRIETARY - Copyright © Unpublished Work - See title page for details

ASSEMBLY OF BACI10AL, BACI10AM, AND BACI10AP RECTANGULAR CONNECTOR INSERTS

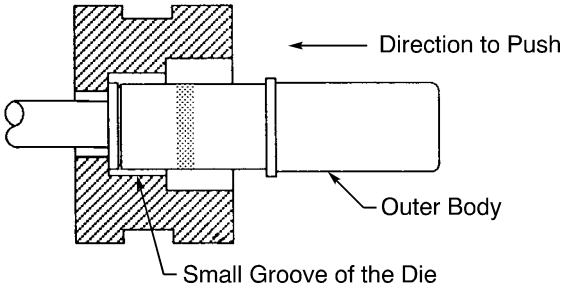

POSITION OF THE CONTACT IN THE CRIMP TOOL
Figure 121

(25) Push the outer body against the die.

(26) Continue to push the outer body against the die and crimp the outer body.

Make sure that the contact stays tight against the die during the crimp operation.

(27) Examine the crimp area of the contact. Refer to Figure 122.

Make sure that:

- The crimp area does not have a crack
- The distance from the rear edge of the outer body to the forward edge of the shoulder of the ferrule is not more than 0.01 inch.

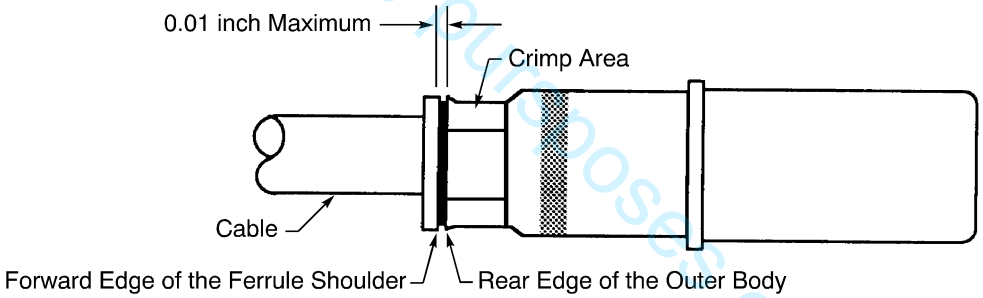

POSITION OF THE OUTER BODY AFTER THE CRIMP OPERATION
Figure 122

(28) If the crimp area has deformed metal on the edges:

(a) Turn the contact assembly 60 degrees on its axis.

(b) Do Step (24) through Step (27) again.

(29) Remove the unwanted strands of the shield between the outer body and the ferrule.

(30) Carefully push the seal boot forward until it stops. Refer to Figure 123.

For training purposes only!

BOEING PROPRIETARY - Copyright © Unpublished Work - See title page for details

ASSEMBLY OF BACI10AL, BACI10AM, AND BACI10AP RECTANGULAR CONNECTOR INSERTS

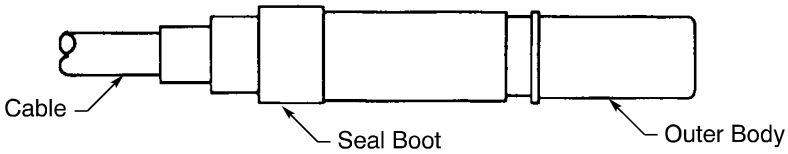

POSITION OF THE SEAL BOOT ON THE CONTACT
Figure 123

(31) Examine the position of the engaging end of the center contact.

(32) If the engaging end of the center contact is not located at the center of the outer contact, carefully push it into its correct position.

CAUTION: IF THE ENGAGING END OF THE CENTER CONTACT IS NOT LOCATED AT THE CENTER OF THE OUTER CONTACT, DAMAGE TO THE CONTACT, THE CONNECTOR, OR THE RECEPTACLE CONNECTOR CAN OCCUR.

N. Assembly of Size 8 BACC47GA1 and BACC47GB1 Quadrax Contacts

Table 49
QUADRAX CONTACT INNER CONTACT CRIMP TOOLS

Quadrax Contact	Crimp Tool		
	Basic Unit		Locator
	Part Number	Setting	Part Number
BACC47GA1	M22520/2-01	5	K709
BACC47GB1	M22520/2-01	5	K709

Table 50
QUADRAX CONTACT OUTER CONTACT CRIMP TOOLS

Quadrax Contact	Crimp Tool		
	Basic Unit	Die	
		Part Number	Cavity
BACC47GA1	M22520/5-01	M22520/5-45	B
BACC47GB1	M22520/5-01	M22520/5-45	B

(1) Make a selection of an inner contact crimp tool from Table 49.

(2) Make a selection of an outer contact crimp tool from Table 50.

(3) Cut the cable perpendicular to its longitudinal axis.

(4) Discard the seal boot that is included in the quadrax contact kit.

(5) Put a Tyco 1877626-1 seal boot on the cable. Refer to Figure 124.

For training purposes only!

BOEING PROPRIETARY - Copyright © Unpublished Work - See title page for details

ASSEMBLY OF BACI10AL, BACI10AM, AND BACI10AP RECTANGULAR CONNECTOR INSERTS

Make sure that:

- The end of the seal boot that has the chamfer points forward to the end of the cable
- The end of the seal boot that has the inner elastomer points rearward, away from the end of the cable.

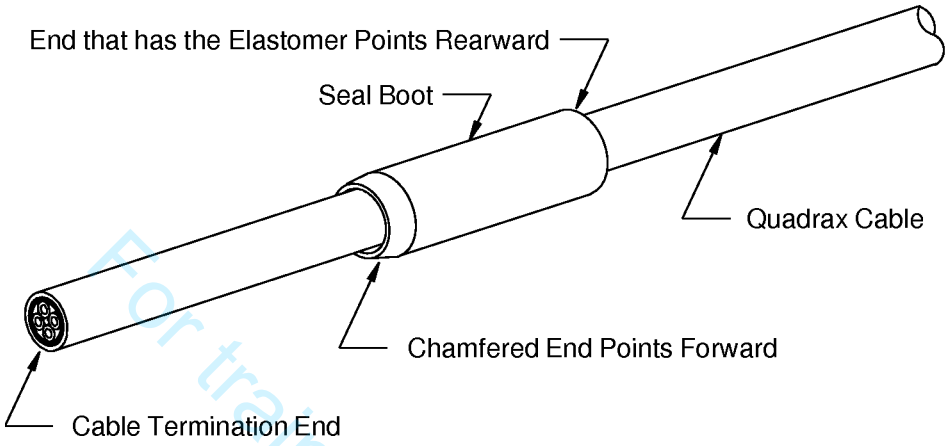

THE SEAL BOOT ON THE CABLE
Figure 124

(6) Move the seal boot away from the end of the cable.

(7) Prepare the end of the cable. Refer to Figure 125.

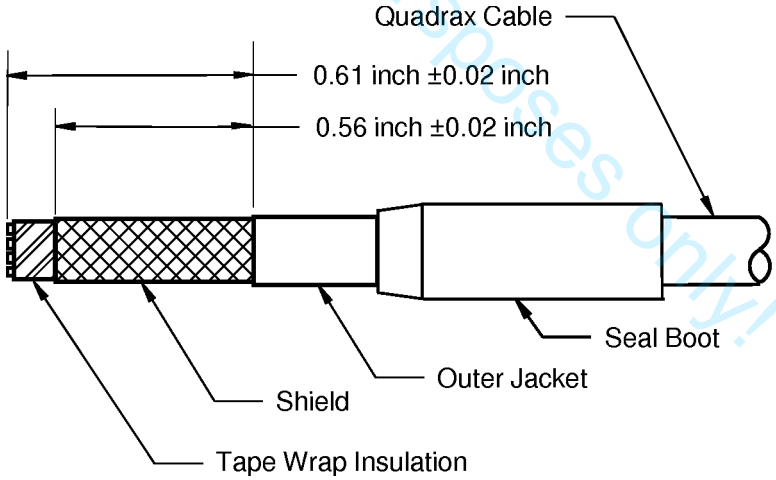

QUADRAX CABLE TRIM DIMENSIONS
Figure 125

(a) Remove 0.61 inch ±0.02 inch of the outer jacket from the end of the cable.

(b) Remove the necessary length of the shield from the end of the cable to make the distance from the end of the outer jacket to the end of the shield equal to 0.56 inch ±0.02 inch.

(8) Put the ferrule on the cable. Refer to Figure 126.

For training purposes only!

BOEING PROPRIETARY - Copyright © Unpublished Work - See title page for details

ASSEMBLY OF BACI10AL, BACI10AM, AND BACI10AP RECTANGULAR CONNECTOR INSERTS

Make sure that the end of the ferrule that has the smaller diameter points forward to the end of the cable.

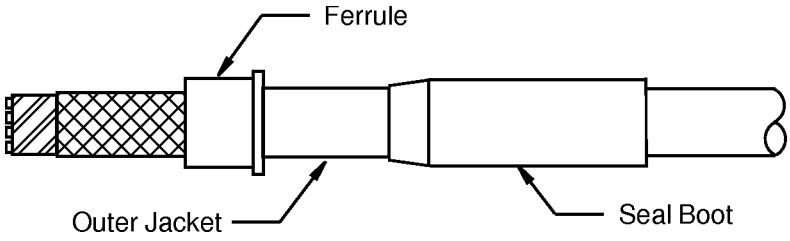

POSITION OF THE FERRULE ON THE CABLE
Figure 126

(9) Push the ferrule rearward until it is against the end of the outer jacket. Refer to Figure 126.

(10) Fold the outer round shield back on the ferrule. Refer to Figure 127.

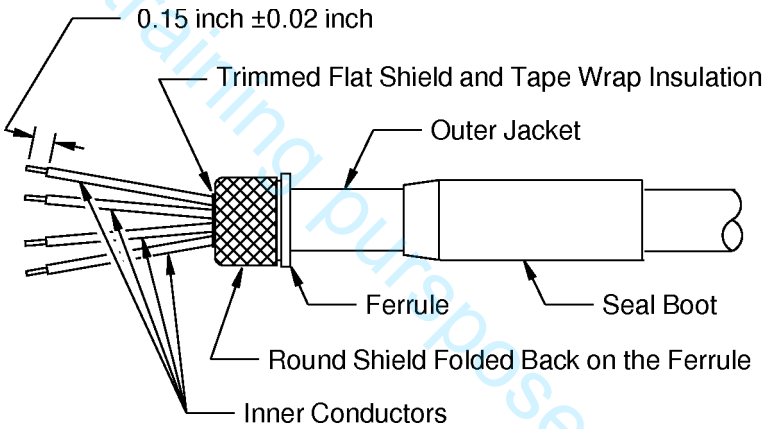

INNER CONDUCTOR TRIM DIMENSIONS AND SHIELD PREPARATION
Figure 127

(11) Remove the necessary length of the inner flat shield and the tape wrap insulation.

Make sure that the ends of the flat shield and the tape wrap are approximately aligned with the front end of the ferrule.

(12) Move the four inner conductors apart.

Make sure that:

- The inner conductors do not cross each other
- The initial positions of the inner conductors in the cable is not changed.

(13) Remove the necessary length of the filler rods.

Make sure that the ends of the filler rods are approximately aligned with the front end of the ferrule.

(14) Remove 0.15 inch ±0.02 inch of insulation from each of the four inner conductors.

For training purposes only!

BOEING PROPRIETARY - Copyright © Unpublished Work - See title page for details

Refer to:

- Figure 127
- Subject 20-00-15 for the procedure to remove the wire insulation.

(15) Crimp an inner contact on each of the four inner conductors.

Make sure that:

- The distance on each conductor between the end of the wire insulation and the end of the inner contact crimp barrel is 0.02 inch maximum
- The wire insulation is not in the crimp barrel
- The conductor strands can be seen in the inspection hole
- All conductor strands are in the crimp barrel
- The conductor strands do not go out of the inspection hole
- The plating of each inner contact is not removed
- The inner contacts do not have cracks.

(16) Put the inner contacts into the larger end of the insulator.

Refer to:

- Figure 128,
- Figure 129,
- Figure 130, and
- Figure 131.

Make sure that:

- The insulator keyway is between the red wire and the yellow wire
- The position of the conductors in the insulator is the same as the position of the conductors in the cable
- The conductors do not cross each other
- Each inner contact is fully installed in the insulator.

NOTE: All four of the wire color position configurations in Figure 130 and Figure 131 are correct. Only one of these configurations is possible at each end of the quadrax cable.

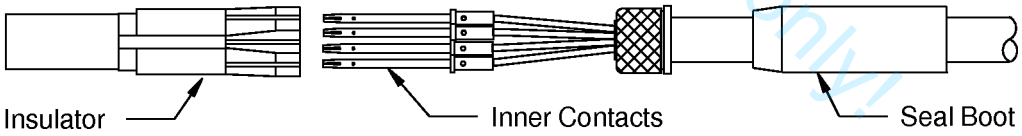

INSTALLATION OF THE INNER CONTACTS IN THE INSULATOR
Figure 128

For training purposes only!

BOEING PROPRIETARY - Copyright © Unpublished Work - See title page for details

ASSEMBLY OF BACI10AL, BACI10AM, AND BACI10AP RECTANGULAR CONNECTOR INSERTS

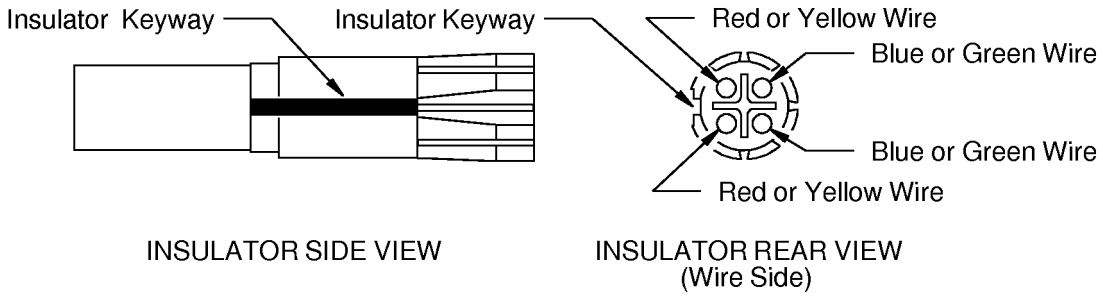

CORRECT CONFIGURATIONS OF THE COLORED WIRES IN THE INSULATOR
Figure 129

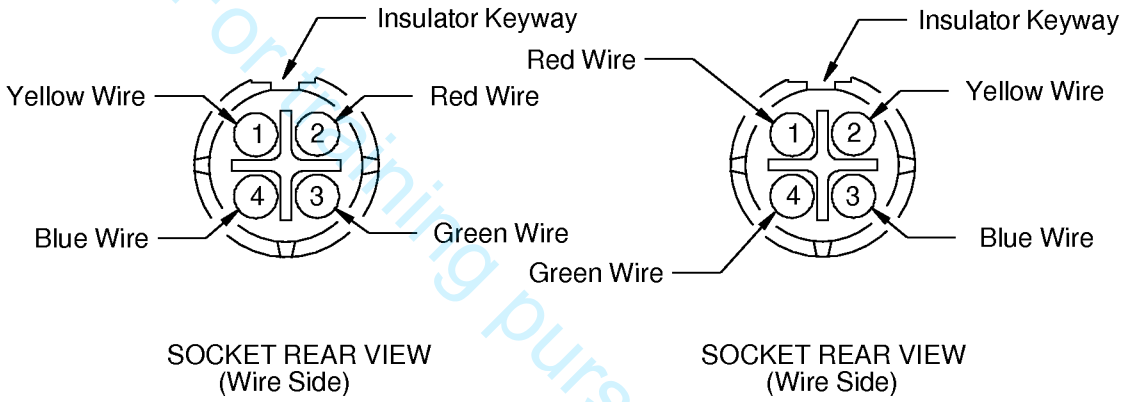

CORRECT CONFIGURATIONS OF THE COLORED WIRES IN THE BACC47GB SOCKET INSULATOR
Figure 130

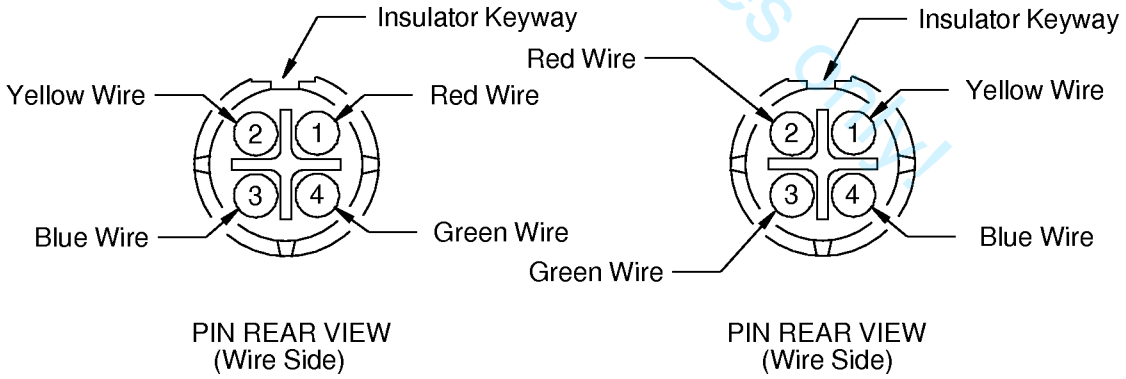

CORRECT CONFIGURATIONS OF THE COLORED WIRES IN THE BACC47GA PIN INSULATOR
Figure 131

(17) Align the key on the outer contact and the insulator keyway. Refer to Figure 132.

For training purposes only

BOEING PROPRIETARY - Copyright © Unpublished Work - See title page for details

ASSEMBLY OF BACI10AL, BACI10AM, AND BACI10AP RECTANGULAR CONNECTOR INSERTS

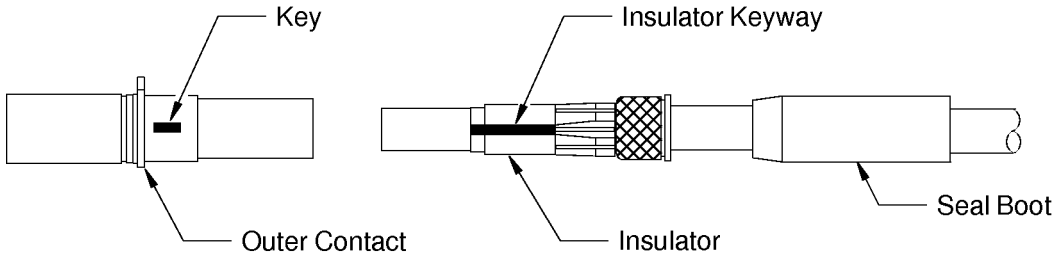

THE OUTER CONTACT AND THE INSULATOR ASSEMBLY
Figure 132

(18) Push the insulator assembly into the outer contact until it stops. Refer to Figure 133.

Make sure that:

- The key on the outer contact and the insulator keyway are aligned
- The rear of the insulator is against the shield that is folded back on the ferrule
- The distance from the rear edge of the outer contact to the shoulder of the ferrule is not more than 0.02 inch
- The distance from the rear end of the ferrule to the end of the cable jacket is not more than 0.02 inch.

For training purposes only!

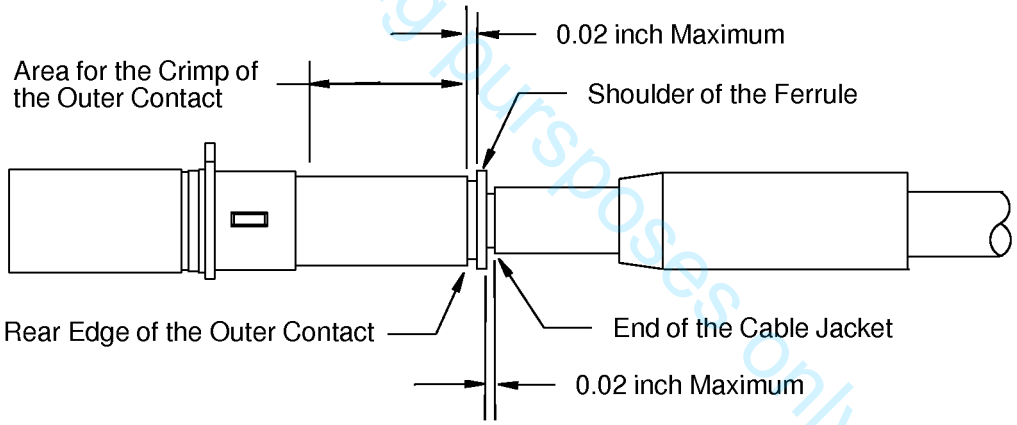

QUADRAX CONTACT ASSEMBLY
Figure 133

(19) Crimp the outer contact. Refer to Figure 133.

(20) Remove all of the strands of the shield that are between the rear edge of the outer contact and the shoulder of the ferrule.

O. Contact Insertion

This paragraph gives the procedure to install size 2222, 2020, 1616, and 1212 contacts in the connector insert.

BOEING PROPRIETARY - Copyright © Unpublished Work - See title page for details

ASSEMBLY OF BACI10AL, BACI10AM, AND BACI10AP RECTANGULAR CONNECTOR INSERTS

For the procedure to install these contacts in the insert, refer to:

- Paragraph 5.P. for size 5 coax contacts and size 0508 or 0505 power contacts
- Paragraph 5.Q. for size 8 coax, twinax, and size 0808 power contacts
- Paragraph 5.R. for size 8 quadrax contacts
- Paragraph 5.S. for fiber optic termini.

For the procedure to install ground block contacts in the connector ground block, refer to:

- Subject 20-74-12 for BACC65AA and BACC65AB connectors
- Subject 20-74-13 for BACC65AN, BACC65AP, BACC65AV and BACC65AW connectors
- Subject 20-74-14 for BACC65BJ and BACC65BK connectors.

NOTE: Contacts can be installed in the insert before or after the insert is installed in the connector shell.

Table 51
CONTACT INSERTION TOOLS

Connector Insert Contact Cavity Size	BACC47FJ and BACC47FK Contact Size	EPXB Contact Size	Insertion Tool	
			Part Number	Color
22	2222	-	M81969/1-01	Green
			DAK266J	-
20	2020	-	M81969/39-01	Green
			CIET-20HDL	-
16	1616	-	M81969/14-03	Blue
			CIET-16	-
	-	1616	M81969/1-03	Blue
12	1212	-	M81969/14-04	Yellow
			CET-12-4	-

(1) Make a selection of a contact insertion tool from Table 51.

NOTE: An insertion tool is not necessary for the insertion of these contacts:

- Size 2020
- Size 1616
- Size 1212.

(2) If an insertion tool is used:

(a) Put the contact assembly in the insertion tool.

(b) Axially align the insertion tool, the contact assembly and the contact cavity.

Make sure that the insertion tool and the contact assembly are perpendicular to the rear face of the connector insert.

(c) Carefully push the insertion tool into the contact cavity until it stops.

Make sure that the insertion tool and the contact cavity stay aligned.

(d) Carefully pull the insertion tool out of the contact cavity.

Make sure that the insertion tool stays aligned with the contact cavity.

For training purposes only!

BOEING PROPRIETARY - Copyright © Unpublished Work - See title page for details

(e) Remove the insertion tool from the wire.

(3) If an insertion tool is not used:

(a) Axially align the contact assembly and the contact cavity.

Make sure that the contact assembly is perpendicular to the rear face of the insert.

(b) Carefully push the contact assembly into the contact cavity until it stops.

Make sure that the contact assembly and the contact cavity stay aligned.

(4) Lightly pull the wire to make sure that the contact is locked in the contact cavity.

CAUTION: DO NOT PULL THE WIRE WITH A STRONG OR A SUDDEN FORCE. THE FORCE CAN CAUSE DAMAGE TO THE CONNECTOR OR THE CONTACT.

CAUTION: DO NOT MAKE A DENT IN THE WIRE INSULATION WITH THE FINGERNAILS. DAMAGE TO THE WIRE INSULATION CAN CAUSE UNSATISFACTORY PERFORMANCE OF THE WIRE.

(5) If the contact is not locked in the contact cavity:

(a) Pull the contact assembly from the contact cavity.

(b) Do Step (2) or Step (3), and Step (4) again.

P. Installation of Size 5 Coax and Size 0508 or 0505 Power Contacts

(1) If a blue intermediate seal boot and a silicone seal boot are on the contact assembly, move them rearward on the cable away from the contact.

(2) Axially align the contact assembly and the contact cavity.

(3) Carefully push the contact assembly into the contact cavity until it stops.

Make sure that the contact assembly and the contact cavity stay aligned.

(4) Lightly pull the wire.

Make sure that the contact is locked in the contact cavity.

CAUTION: DO NOT PULL THE WIRE WITH A STRONG OR A SUDDEN FORCE. DAMAGE TO THE CONNECTOR OR THE CONTACT CAN OCCUR.

(5) If the contact is not locked in the contact cavity:

(a) Pull the contact assembly from the cavity.

(b) Do Step (2) through Step (4) again.

(6) If a silicone seal boot and a blue intermediate seal boot are on the contact assembly:

(a) Push the nylon sealing boot into the silicone sealing boot. Refer to Figure 134.

For training purposes only!

BOEING PROPRIETARY - Copyright © Unpublished Work - See title page for details

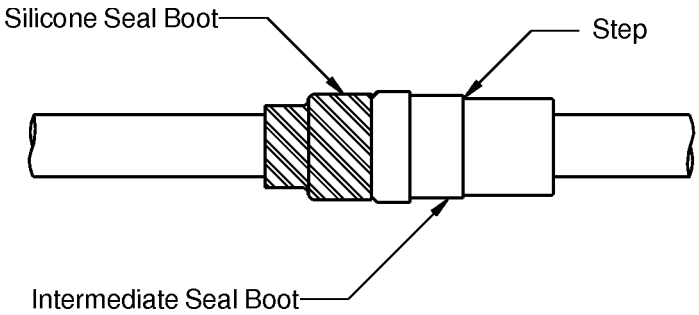

POSITION OF THE NYLON SEALING BOOT IN THE SILICONE SEALING BOOT
Figure 134

(b) Push the sealing boots forward on the cable until the edge of the step of the nylon sealing boot is against the rear of the grommet. Refer to Figure 135.

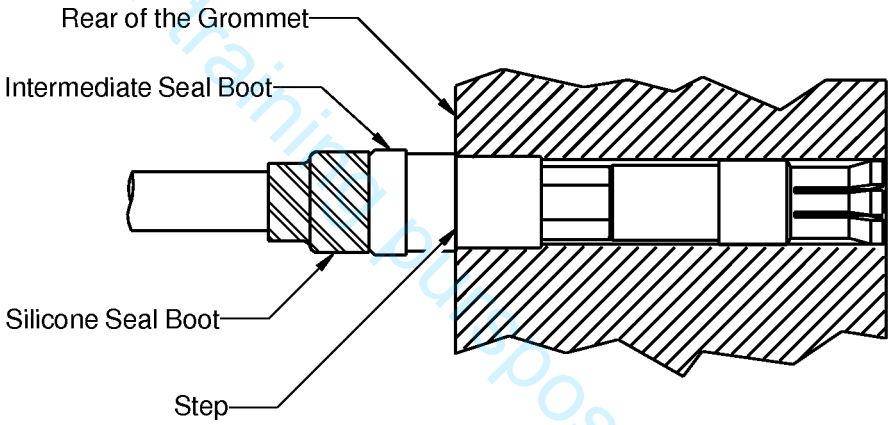

POSITION OF THE SEALING BOOTS ON THE COAX CONTACT ASSEMBLY
Figure 135

For training purposes only!

Q. Installation of Size 8 Coax, Size 8 Twinax, and Size 0808 Power Contacts

Table 52
LUBRICANTS

Lubricant	Specification	Supplier
Alcohol, Isopropyl	TT-I-735	An available source

(1) At the rear of the connector, align the size 8 coax contact assembly and the size 8 contact cavity.

Make sure that the longitudinal axis of the contact assembly is perpendicular to the rear face of the connector.

NOTE: A contact insertion tool is not necessary for the installation of these contacts.

(2) Push the contact into the contact cavity until the contact stops and is locked.

NOTE: A lubricant can be used to make it easier to push the contact into the contact cavity. Refer to Table 52.

BOEING PROPRIETARY - Copyright © Unpublished Work - See title page for details

(3) Align the key of the seal boot with the keyway of the contact cavity.

(4) Push the seal boot into the contact cavity.

Make sure that the rear edge of the seal boot key is aligned with the rear face of the connector.

NOTE: A lubricant can be used to make it easier to push the seal boot into the contact cavity. Refer to Table 52.

(5) Lightly pull on the cable.

Make sure that the contact is locked in the contact cavity.

CAUTION: DO NOT PULL THE WIRE WITH A STRONG OR A SUDDEN FORCE. THE FORCE CAN CAUSE DAMAGE TO THE CONNECTOR OR THE CONTACT.

CAUTION: DO NOT MAKE A DENT IN THE WIRE INSULATION WITH THE FINGERNAILS. DAMAGE TO THE WIRE INSULATION CAN CAUSE UNSATISFACTORY PERFORMANCE OF THE WIRE.

(6) If the contact is not locked in the contact cavity:

(a) Pull the contact assembly out of the contact cavity.

(b) Do Step (2) through Step (5) again.

R. Installation of Size 8 Quadrax Contacts

Table 53
LUBRICANTS

Lubricant	Specification	Supplier
Alcohol, Isopropyl	TT-I-735	An available source

(1) At the rear of the connector, align the contact polarization key and the keyway of the quadrax contact cavity.

Make sure that the longitudinal axis of the contact assembly is perpendicular to the rear face of the connector.

NOTE: A contact insertion tool is not necessary to install these contacts.

Refer to:

- Figure 136 for the polarization key of the quadrax contact
- Figure 137 for the keyway of the quadrax contact cavity.

For training purposes only!

BOEING PROPRIETARY - Copyright © Unpublished Work - See title page for details

ASSEMBLY OF BACI10AL, BACI10AM, AND BACI10AP RECTANGULAR CONNECTOR INSERTS

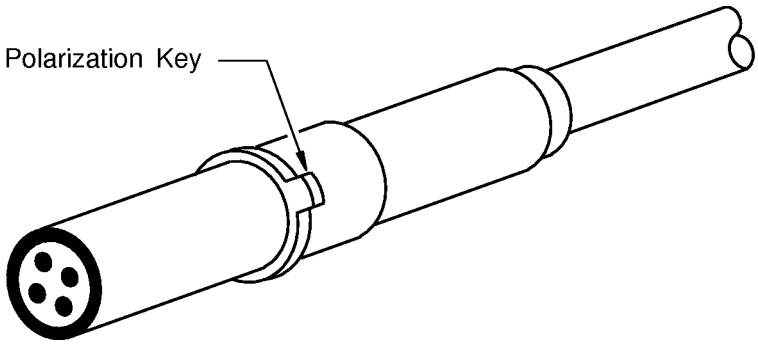

POLARIZATION KEY OF THE QUADRAX CONTACT
Figure 136

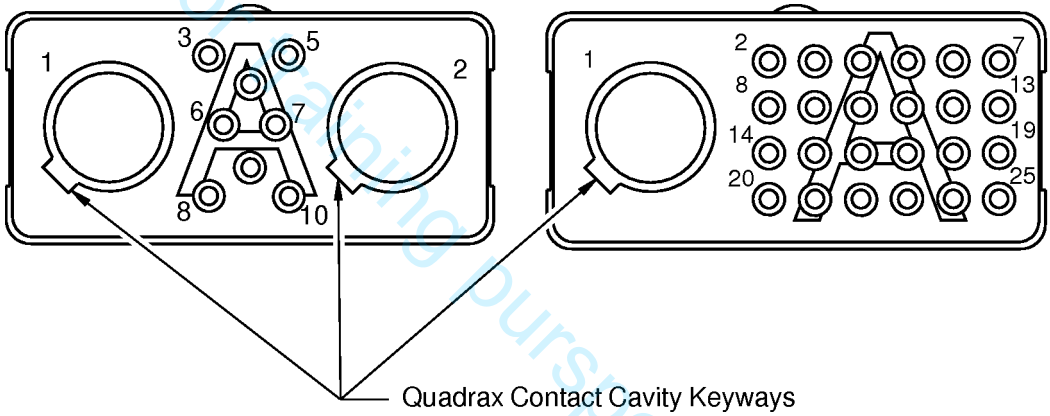

THE QUADRAX CONTACT CAVITY KEYWAYS
Figure 137

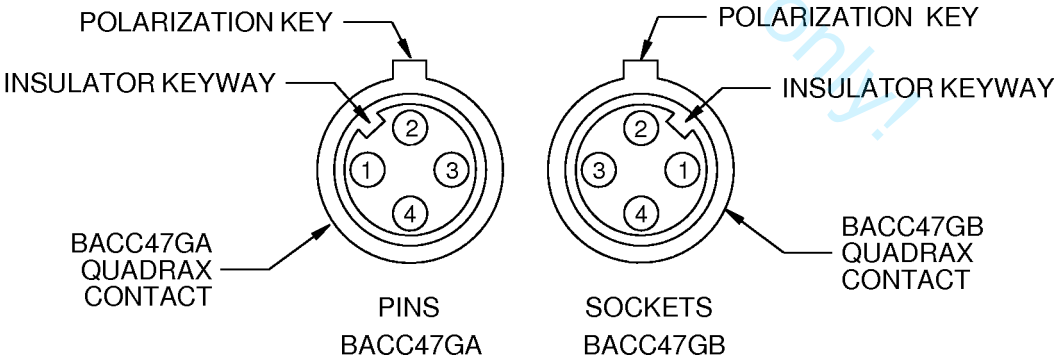

QUADRAX INNER CONTACT IDENTIFICATION NUMBERS - ENGAGING FACE OF THE CONNECTOR
Figure 138

For training purposes only!

BOEING PROPRIETARY - Copyright © Unpublished Work - See title page for details

(2) Push the contact into the contact cavity until the contact stops and is locked.

NOTE: A lubricant can be used to make it easier to push the contact into the contact cavity. Refer to Table 53.

(3) Align the seal boot key with the contact cavity keyway. Refer to Figure 137.

(4) Push the seal boot into the contact cavity.

Make sure that the rear edge of the seal boot key is aligned with the rear face of the connector.

NOTE: A lubricant can be used to make it easier to push the seal boot into the contact cavity. Refer to Table 53.

(5) Lightly pull on the cable.

Make sure that the contact is locked in the contact cavity.

CAUTION: DO NOT PULL THE WIRE WITH A STRONG OR A SUDDEN FORCE. THE FORCE CAN CAUSE DAMAGE TO THE CONNECTOR OR THE CONTACT.

CAUTION: DO NOT MAKE A DENT IN THE WIRE INSULATION WITH THE FINGERNAILS. DAMAGE TO THE WIRE INSULATION CAN CAUSE UNSATISFACTORY PERFORMANCE OF THE WIRE.

(6) If the contact is not locked in the contact cavity:

(a) Pull the contact assembly out of the contact cavity.

(b) Do Step (2) through Step (5) again.

S. Insertion of Fiber Optic Contact Termini

NOTE: A contact terminus can be installed before or after the alignment sleeve insert is installed in the connector.

Refer to the procedures for Contact Terminus Insertion in Subject 20-12-21.

T. Installation of the Fiber Optic Alignment Sleeve Insert

NOTE: The alignment sleeve insert can be installed before or after the contact termini are installed in the insert.

Table 54
NECESSARY TOOLS

Tool	Type	Size (inch)
Driver	Allen Wrench	5/64
	Screwdriver, Hex	5/64
Torque	Allen Wrench	5/64
	Screwdriver, Hex	5/64

(1) Examine the alignment sleeve insert. Refer to Paragraph 6.B.

For training purposes only!

BOEING PROPRIETARY - Copyright © Unpublished Work - See title page for details

(2) Make a selection of these tools from Table 54:
- A driver
- A torque tool.

NOTE: The driver can have a ball type end.

(3) Align the rear face of the alignment sleeve insert with the engaging face of the connector.

CAUTION: DO NOT SHAKE OR TWIST THE ALIGNMENT SLEEVE INSERT WHEN IT IS INSTALLED IN THE INSERT. DAMAGE TO THE CERAMIC FERRULES OF THE CONTACT TERMINI CAN OCCUR.

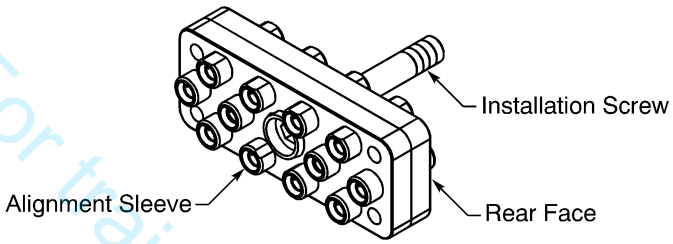

ALIGNMENT SLEEVE INSERT
Figure 139

(4) Fully engage the threads of the installation screw and the screw hole in the connector insert.

(5) Torque the screw 8 inch-pounds ±1 inch-pound.

U. Seal of an Empty Contact Cavity

Empty contact cavities in the insert must be sealed. Refer to Subject 20-60-08.

Make sure that a size 5 contact cavity is sealed with one of these:
- A seal plug from Table 55.
- A 0.50 inch ±0.05 inch length of silicone rubber seal rod from Table 56.

Table 55
SEAL PLUG FOR SIZE 5 CONTACT CAVITY

Part Number	Color	Supplier
MS27488-4-1	Blue	QPL

Table 56
SEAL ROD FOR SIZE 5 CONTACT CAVITY

Part Number	Diameter	Supplier
BMS 1-52	0.324 inch to 0.356 inch	QPL

For training purposes only!

BOEING PROPRIETARY - Copyright © Unpublished Work - See title page for details

ASSEMBLY OF BACI10AL, BACI10AM, AND BACI10AP RECTANGULAR CONNECTOR INSERTS

6. INSPECTION AND CLEANING OF A FIBER OPTIC ALIGNMENT SLEEVE INSERT

A. Necessary Tools and Materials

Table 57
NECESSARY TOOLS

Tool	Description	Part Number	Supplier
Canned Air	Tetrafluoroethane	ES1620	Chemtronics
Protective Equipment	Finger Cot	-	Available Source
	Gloves, Powder Free	-	Available Source

Table 58
SOLVENTS

Solvent	Specification	Supplier
Alcohol, Ethyl	O-E-760	Available Source
Alcohol, Isopropyl	TT-I-735	Available Source
Water, Distilled	-	Available Source

For training purposes only!

B. Inspection and Cleaning

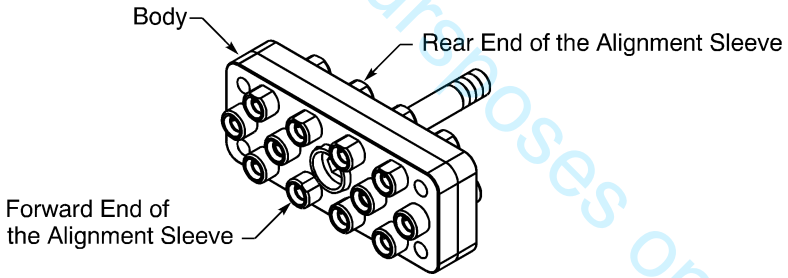

ALIGNMENT SLEEVE INSERT
Figure 140

CAUTION: KEEP THE ALIGNMENT SLEEVE INSERT IN A CLEAN PLASTIC BAG UNTIL IT IS INSTALLED ON THE CONNECTOR. CONTAMINATION ON THE ALIGNMENT SLEEVE INSERT CAN CAUSE UNSATISFACTORY PERFORMANCE OF THE CONNECTOR.

Refer to Figure 140.

(1) Without magnification, examine each end of the alignment sleeves of the insert.

(2) If an alignment sleeve has contamination, clean the sleeve without solvent. Refer to Paragraph 6.C.

(3) Without magnification, examine each end of the alignment sleeves again.

(4) If an alignment sleeve has remaining contamination, clean the sleeve with solvent. Refer to Paragraph 6.D.

(a) Without magnification, examine each end of the alignment sleeves again.

BOEING PROPRIETARY - Copyright © Unpublished Work - See title page for details

(b) If an alignment sleeve has remaining contamination, clean the sleeve with solvent again. Refer to Paragraph 6.D.

(c) Without magnification, examine the alignment sleeves again.

(d) If an alignment sleeve has remaining contamination, replace the alignment sleeve insert.

C. Contamination Removal - Without Solvent

For the conditions that are applicable for this procedure, refer to Paragraph 6.B.

Refer to Figure 140.

(1) Make a selection of canned air from Table 57.

NOTE: An equivalent canned air is a satisfactory alternative.

(2) Make a selection of a protection equipment from Table 57.

NOTE: A satisfactory alternative is to clean the hands.

(3) If the hands are not clean, put the protection equipment on.

(4) Apply the canned air in each alignment sleeve that has contamination.

D. Contamination Removal - With Solvent

For the conditions that are applicable for this procedure, refer to Paragraph 6.B.

WARNING: SOME SOLVENTS ARE FLAMMABLE. MAKE SURE THAT THE QUANTITY OF A FLAMMABLE SOLVENT NEAR THE AIRPLANE IS NOT MORE THAN THE QUANTITY THAT IS NECESSARY TO CLEAN THE ALIGNMENT SLEEVE INSERT.

Refer to Figure 140.

(1) Make a selection of canned air from Table 57.

NOTE: An equivalent canned air is a satisfactory alternative.

(2) Make a selection of these solvents from Table 58:
- An alcohol
- Distilled water.

(3) Make a selection of a protection equipment from Table 57.

NOTE: A satisfactory alternative is to clean the hands.

(4) If the hands are not clean, put the protection equipment on.

(5) Put a quantity of alcohol in a small container that can be sealed with a lid.

Make sure that:
- The container is clean
- The size of the container is sufficient to hold the alignment sleeve insert
- The quantity of alcohol is sufficient to put the body of the alignment sleeve insert below the surface of the alcohol.

(6) Put a quantity of distilled water in a small container that can be sealed with a lid.

For training purposes only!

BOEING PROPRIETARY - Copyright © Unpublished Work - See title page for details

Make sure that:

- The container is clean
- The size of the container is sufficient to hold the alignment sleeve insert
- The quantity of distilled water is sufficient to put the body of the alignment sleeve insert below the surface of the alcohol.

(7) Put the alignment sleeve insert in the container that has alcohol for 30 seconds minimum.
Make sure that the body of the alignment sleeve insert is below the surface of the alcohol.

(8) Remove the alignment sleeve insert from the alcohol.

(9) Seal the alignment sleeve insert in the container that has distilled water.
Make sure that the body of the alignment sleeve insert is below the surface of the distilled water.

(10) Lightly shake the container for 1 to 3 minutes.

(11) Remove the alignment sleeve insert from the water.

(12) Dry the alignment sleeve insert with canned air.

(13) Put the alignment sleeve insert in the container that has alcohol for 30 seconds minimum.
Make sure that the body of the alignment sleeve insert is below the surface of the alcohol.

(14) Remove the alignment sleeve insert from the alcohol.

(15) Dry the alignment sleeve insert with canned air.

7. APPROVED TOOL SUPPLIERS

A. Contact Removal Tools

Table 59
CONTACT REMOVAL TOOL SUPPLIERS

Removal Tool	Supplier
CET-12-4	ITT Cannon
CET-C8	ITT Cannon
CIET-16	ITT Cannon
CIET-20HDL	ITT Cannon
DRK266J	Daniels
M81969/1-01	QPL
M81969/1-03	QPL
M81969/14-03	QPL
M81969/14-04	QPL
M81969/39-01	QPL
MS3178-001	QPL

For training purposes only

BOEING PROPRIETARY - Copyright © Unpublished Work - See title page for details

B. Contact Crimp Tools

Table 60
CRIMP TOOL SUPPLIERS

Crimp Tool	Supplier
282 557 020	Radiall
282 581 007	Radiall
282 581 008	Radiall
282 581 009	Radiall
282588	Radiall
4046A	Pico
414DA-8N	Pico
M22520/1-01	QPL
M22520/2-01	QPL
M22520/1-02	QPL
M22520/1-11	QPL
M22520/5-01	QPL
M22520/2-08	QPL
M22520/2-11	QPL
M22520/2-23	QPL
M22520/5-01	QPL
M22520/5-05	QPL
M22520/5-27	QPL
M22520/5-35	QPL
M22520/5-45	QPL
M22520/5-61	QPL
M22520/23-01	QPL
M22520/23-02	QPL
PICO400B	Pico
WA22	Daniels
WA22LC	Daniels
WA27F	Daniels

For training purposes only!

BOEING PROPRIETARY - Copyright © Unpublished Work - See title page for details

C. Contact Insertion Tools

Table 61
CONTACT INSERTION TOOL SUPPLIERS

Insertion Tool	Supplier
CET-12-4	ITT Cannon
CIET-16	ITT Cannon
CIET-20HDL	ITT Cannon
DAK266J	Daniels
DAK83-20	Daniels
M81969/1-01	QPL
M81969/1-03	QPL
M81969/14-03	QPL
M81969/14-04	QPL
M81969/14-11	QPL
M81969/39-01	QPL
ST2220-2-28	Boeing

For training pursposes only!

BOEING PROPRIETARY - Copyright © Unpublished Work - See title page for details

ASSEMBLY OF BACI10BC RECTANGULAR CONNECTOR INSERTS

Paragraph		Page
1.	GENERAL DATA	1
A.	Damage Conditions - Rear Face of the Insert	1
B.	Damage Conditions - Front Face of the Insert	1
C.	Wire O.D. Limits for an Environmentally Sealed Connector	2
2.	PART NUMBERS AND DESCRIPTION	3
A.	Connector Insert Part Numbers	3
B.	Size 2222D, 2020, 2018, and 1616 Contact Part Numbers	5
3.	INSERT CONFIGURATIONS	7
A.	BACI10BC Inserts	7
4.	CONNECTOR INSERT DISASSEMBLY	9
A.	Seal Plug and Seal Rod Removal	9
B.	Contact Removal	10
5.	CONNECTOR INSERT ASSEMBLY	11
A.	Contact Assembly	11
B.	Increase of the O.D. of the Wire	20
C.	Decrease of the O.D. of the Wire	21
D.	Contact Insertion	22
E.	Seal of an Empty Contact Cavity	25
6.	APPROVED TOOL SUPPLIERS	25
A.	Contact Removal Tools	25
B.	Contact Crimp Tools	25
C.	Contact Insertion Tools	26

For training pursposes only!

20-74-04 CONTENTS

BOEING PROPRIETARY - Copyright © Unpublished Work - See title page for details

ASSEMBLY OF BACI10BC RECTANGULAR CONNECTOR INSERTS

1. GENERAL DATA

A. Damage Conditions - Rear Face of the Insert

The insert must be replaced when one or more of these conditions occur:

- The depth of the damage extends farther than the bottom of the outer seal web; refer to Figure 1
- The damage extends from one contact cavity to a different contact cavity; refer to Figure 2.

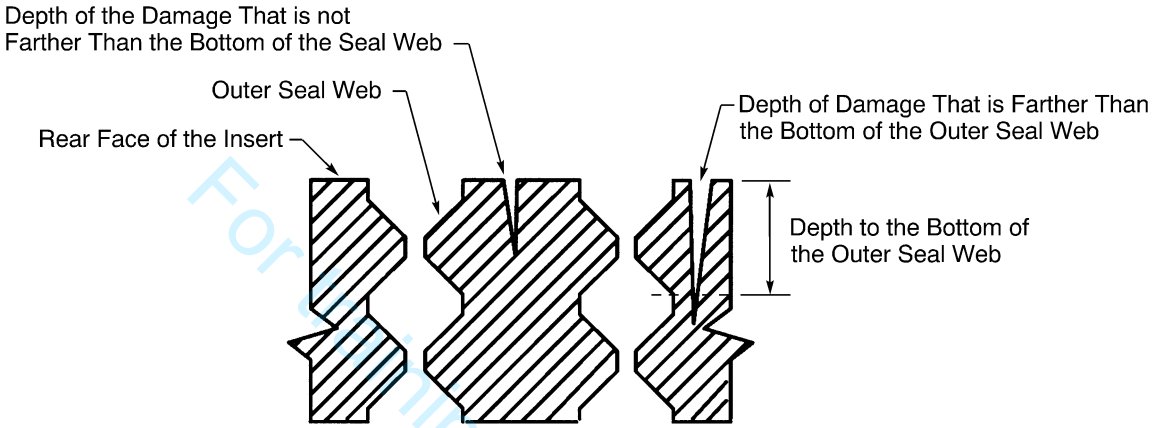

REAR FACE OF THE INSERT - DEPTH OF DAMAGE
Figure 1

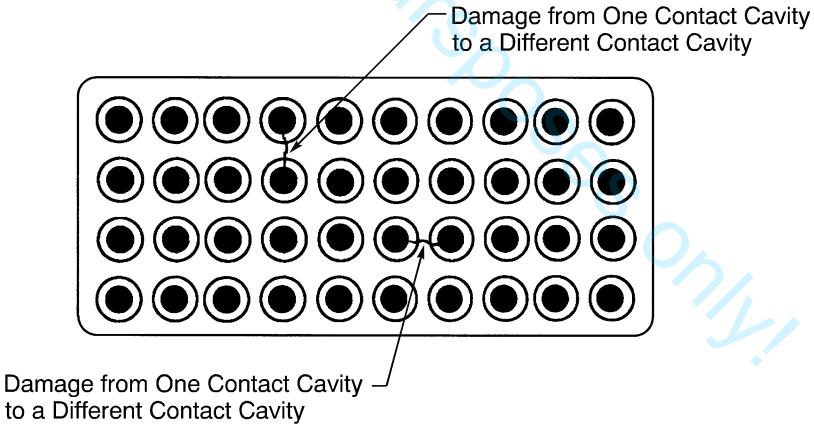

REAR FACE OF THE INSERT - LENGTH OF DAMAGE
Figure 2

B. Damage Conditions - Front Face of the Insert

Refer to Figure 3.

The insert for pin contacts must be replaced when one or more of these conditions occur:

- The damage extends from one contact cavity to a different contact cavity
- The damage extends from one contact cavity to the outer edge of the insert.

For training purposes only!

BOEING PROPRIETARY - Copyright © Unpublished Work - See title page for details

ASSEMBLY OF BACI10BC RECTANGULAR CONNECTOR INSERTS

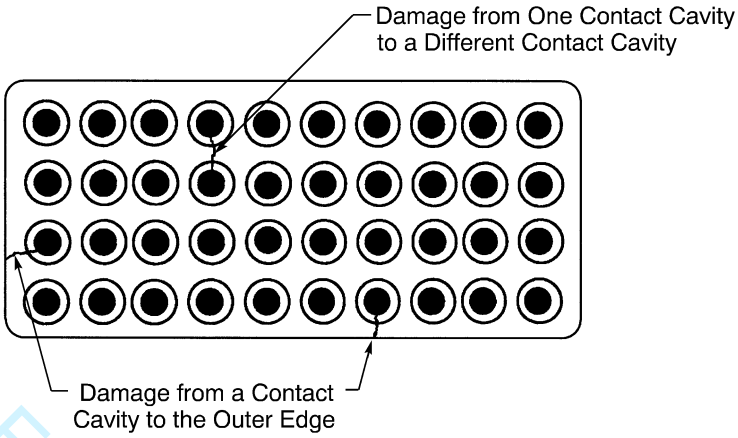

FRONT FACE OF THE INSERT - LENGTH OF DAMAGE
Figure 3

C. Wire O.D. Limits for an Environmentally Sealed Connector

Refer to:

- Subject 20-60-08 for the identification of an environmentally sealed connector
- Table 1 for the minimum wire O.D. that is necessary for a satisfactory environmental seal of a contact cavity
- Table 1 for the maximum wire O.D. that is necessary for the removal of a rear release contact from the insert
- Paragraph 5.B. for the procedure to increase the diameter of the wire.
- Paragraph 5.C. for the procedure to decrease the diameter of the wire.

Table 1
MINIMUM WIRE O.D. FOR A SATISFACTORY SEAL

Connector Insert	Description	Contact Cavity Size	Wire O.D. (inch)	
			Minimum	Maximum
BACI10BC	Rear release, rear removal contacts	22	0.030	0.048
		20	0.040	0.071
		16	0.065	0.103

For training purposes only.

BOEING PROPRIETARY - Copyright © Unpublished Work - See title page for details

ASSEMBLY OF BACI10BC RECTANGULAR CONNECTOR INSERTS

2. PART NUMBERS AND DESCRIPTION

A. Connector Insert Part Numbers

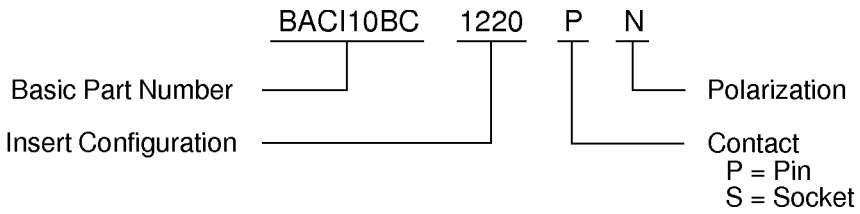

BACI10BC() INSERT PART NUMBER STRUCTURE
Figure 4

Table 2
APPROVED SUPPLIERS OF BOEING STANDARD CONNECTOR INSERTS

Reference	Insert Part Number	Supplier	Contact Cavity		Applicable Contact Part Numbers
			Count	Size	
Figure 7	BACI10BC0816P()	Amphenol - Air LB	8	16	BACC47CG3A
	BACI10BC0816P()B	Deutsch			
	BACI10BC0816S()	Amphenol - Air LB	8	16	M39029/57-358
	BACI10BC0816S()B	Deutsch			
Figure 8	BACI10BC0910P()	Amphenol - Air LB	2	16	BACC47CG3A
			8	20	BACC47HA3A
	BACI10BC0910S()		2	16	M39029/57-358
			8	20	BACC47HB3A
Figure 9	BACI10BC0936P()	Amphenol - Air LB	6	22	BACC47CG1A
			3	20	BACC47HA3A
	BACI10BC0936S()		6	22	M39029/57-354
			3	20	BACC47HB3A
Figure 10	BACI10BC1220P()	Amphenol - Air LB	12	20	BACC47CG2A
	BACI10BC1220P()B	Deutsch			
	BACI10BC1220S()	Amphenol - Air LB	12	20	M39029/57-357
	BACI10BC1220S()B	Deutsch			
	BACI10BC1220AP()	Amphenol - Air LB	12	20	BACC47HA3A
	BACI10BC1220AS()	Amphenol - Air LB	12	20	BACC47HB3A

For training purposes only!

BOEING PROPRIETARY - Copyright © Unpublished Work - See title page for details

ASSEMBLY OF BACI10BC RECTANGULAR CONNECTOR INSERTS

Table 2 (continued)

Reference	Insert Part Number	Supplier	Contact Cavity		Applicable Contact Part Numbers
			Count	Size	
Figure 11	BACI10BC1622P()	Amphenol - Air LB	5	22	BACC47CG1A
			6	16	BACC47CG3A
	BACI10BC1622P()B	Deutsch	5	22	BACC47CG1A
			6	16	BACC47CG3A
	BACI10BC1622S()	Amphenol - Air LB	5	22	M39029/57-354
			6	16	M39029/57-358
	BACI10BC1622S()B	Deutsch	5	22	M39029/57-354
			6	16	M39029/57-358
Figure 12	BACI10BC2022P()	Amphenol - Air LB	20	22	BACC47CG1A
	BACI10BC2022P()B	Deutsch			
	BACI10BC2022S()	Amphenol - Air LB	20	22	M39029/57-354
	BACI10BC2022S()B	Deutsch			

For training pursposes only!

BOEING PROPRIETARY - Copyright © Unpublished Work - See title page for details

ASSEMBLY OF BACI10BC RECTANGULAR CONNECTOR INSERTS

B. Size 2222D, 2020, 2018, and 1616 Contact Part Numbers

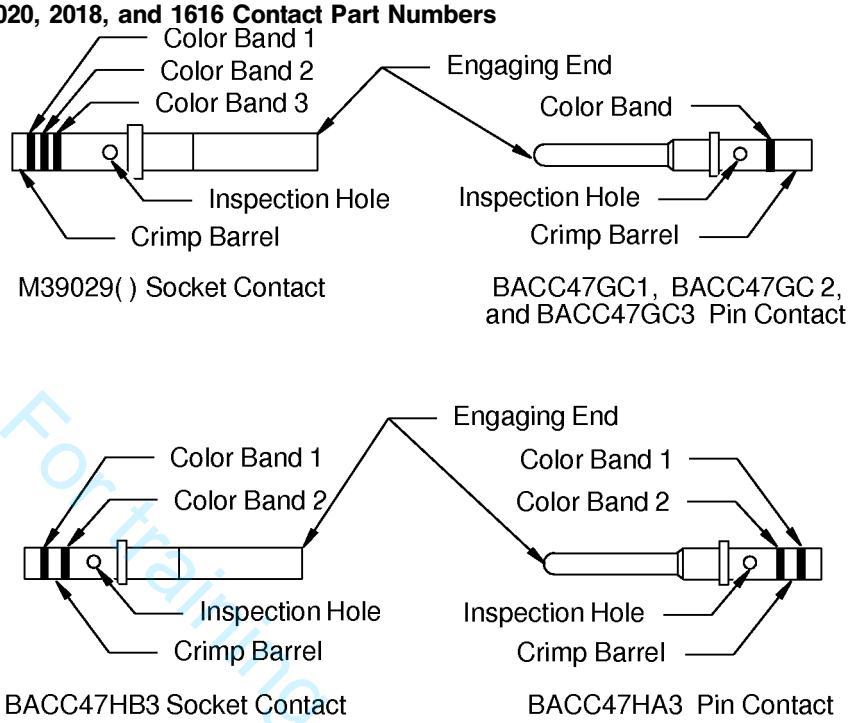

REAR RELEASE CONTACTS FOR BACI10BC INSERTS
Figure 5

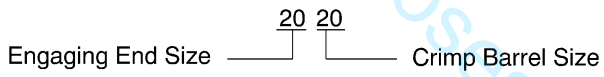

EXAMPLE OF CONTACT SIZE
Figure 6

NOTE: The size 2222D contact has a size 22 engaging end and a size 22 crimp barrel.

Table 3
STANDARD CONTACTS FOR BACI10BC INSERTS

Size	Engaging End Size	Crimp Barrel Size	Type	Part Number	Color Code	
					Color	Band
2222D	22	22	Pin	BACC47GC1A	Green	1
			Socket	M39029/57-354	Orange	1
					Green	2
					Yellow	3

For training purposes only!

BOEING PROPRIETARY - Copyright © Unpublished Work - See title page for details

ASSEMBLY OF BACI10BC RECTANGULAR CONNECTOR INSERTS

Table 3 (continued)

Size	Engaging End Size	Crimp Barrel Size	Type	Part Number	Color Code	
					Color	Band
2020	20	20	Pin	BACC47GC2A	Red	1
			Socket	M39029/57-357	Orange	1
					Green	2
					Violet	3
2018	20	18	Pin	BACC47HA3A	Violet	1
					Red	2
			Socket	BACC47HB3A	Violet	1
					Red	2
1616	16	16	Pin	BACC47GC3A	Blue	1
			Socket	M39029/57-358	Orange	1
					Green	2
					Gray	3

Table 4
APPROVED SUPPLIERS OF BOEING STANDARD CONTACTS

Contact	Supplier
BACC47GC()	Amphenol
	Souriau
	Tri-Star
BACC47HA()	Amphenol
	Glenair
	Tri-Star
BACC47HB()	Amphenol
	Glenair
	Tri-Star
M39029/57-354	QPL
M39029/57-357	QPL
M39029/57-358	QPL

For training purposes only!

BOEING PROPRIETARY - Copyright © Unpublished Work - See title page for details

ASSEMBLY OF BACI10BC RECTANGULAR CONNECTOR INSERTS

3. INSERT CONFIGURATIONS

A. BACI10BC Inserts

Table 5
BACI10BC INSERT CONFIGURATIONS

Insert Configuration	Contact Cavity			Reference
	Count	Size	Identification	
BACI10BC0816	8	16	1 thru 8	Figure 7
BACI10BC0910	8	20	1 thru 8	Figure 8
	2	16	A and B	
BACI10BC0936	6	22	1 thru 6	Figure 9
	3	20	7, 8, and 9	
BACI10BC1220	12	20	1 thru 12	Figure 10
BACI10BC1220A				
BACI10BC1622	5	22	4 thru 8	Figure 11
	6	16	1,2, 3, 9, 10, and 11	
BACI10BC2022	20	22	1 thru 20	Figure 12

NOTE: Figure 7 through Figure 12 show the engaging side of an insert for pin contacts. The view of the engaging side of a BACI10BC insert for socket contacts is a mirror image of this view.

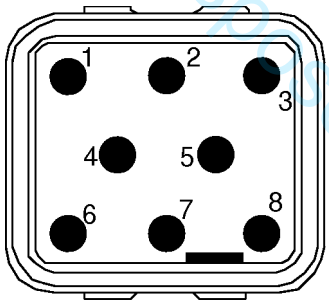

BACI10BC0816 INSERT CONFIGURATION
Figure 7

For training purposes only!

BOEING PROPRIETARY - Copyright © Unpublished Work - See title page for details

ASSEMBLY OF BACI10BC RECTANGULAR CONNECTOR INSERTS

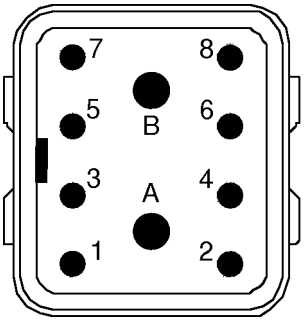

BACI10BC0910 INSERT CONFIGURATION
Figure 8

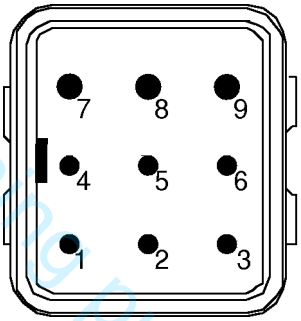

BACI10BC0936 INSERT CONFIGURATION
Figure 9

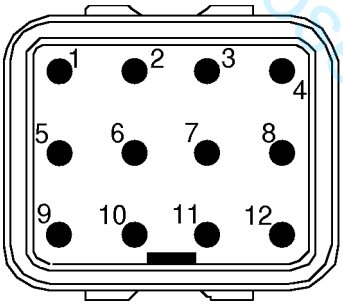

BACI10BC1220 INSERT CONFIGURATION
Figure 10

For training purposes only!

BOEING PROPRIETARY - Copyright © Unpublished Work - See title page for details

ASSEMBLY OF BACI10BC RECTANGULAR CONNECTOR INSERTS

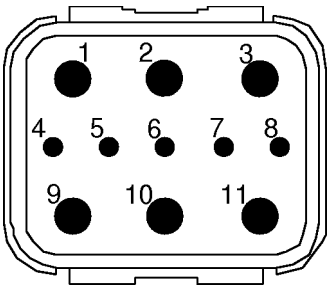

BACI10BC1622 INSERT CONFIGURATION
Figure 11

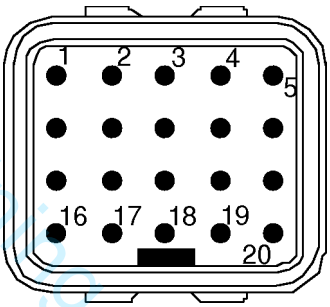

BACI10BC2022 INSERT CONFIGURATION
Figure 12

For training purposes only!

4. CONNECTOR INSERT DISASSEMBLY

A. Seal Plug and Seal Rod Removal

Table 6
NECESSARY TOOLS

Tool	Type
Pliers	Needle Nose

(1) Make a selection of a pair of pliers from Table 6.

CAUTION: MAKE SURE THE PLIERS HAVE SMOOTH SURFACES AND NO SHARP EDGES. PLIERS WITH A ROUGH SURFACE OR A SHARP EDGE CAN CAUSE DAMAGE TO THE REAR GROMMET.

(2) If it is necessary to get access to the rear of the insert, remove the plastic tie straps or the wire harness ties that are less than 6 inches from the connector.

(3) Tightly hold the end of the seal plug or the seal rod in the jaws of the pliers.

(4) Pull the seal plug or the seal rod out of the contact cavity.

Make sure that the seal plug or seal rod stays perpendicular to the face of the insert while you pull it out of the contact cavity.

BOEING PROPRIETARY - Copyright © Unpublished Work - See title page for details

B. Contact Removal

This paragraph gives the procedure to remove size 2222D, 2020, 2018, and 1616 contacts from the connector insert.

Table 7
REMOVAL TOOLS FOR SIZE 2222D, 2020, 2018, AND 1616 CONTACTS

Contact Size	Contact Engaging End Size	Contact Crimp Barrel Size	Insert Contact Cavity Size	Removal Tool	
				Part Number	Color
2222D	22	22	22	M81969/14-01	Green
				DAK266J	-
2020	20	20	20	M81969/14-10	Red
				CIET-20HDL	-
2018	20	18	20	M81969/39-01	Green
				CIET-20HDL	-
1616	16	16	16	M81969/14-03	Blue
				CIET-16	-

(1) Make a selection of a contact removal tool from Table 7.

CAUTION: DO NOT USE A REMOVAL TOOL THAT HAS A DEFECT. A REMOVAL TOOL THAT HAS A DEFECT CAN CAUSE DAMAGE TO THE GROMMET OR THE RETENTION CLIP.

(2) Put the forward part of the removal tool on the wire near the rear of the insert. Refer to Figure 13.

POSITION OF THE WIRE IN THE FORWARD PART OF THE REMOVAL TOOL
Figure 13

(3) Axially align the removal tool and the contact cavity.
Make sure that the removal tool is perpendicular to the face of the insert.

(4) Carefully push the removal tool into the contact cavity until it stops. Refer to Figure 14.
Make sure that:
- The tool stays aligned with the cavity
- The tool is not turned in the cavity.

For training purposes only!

BOEING PROPRIETARY - Copyright © Unpublished Work - See title page for details

ASSEMBLY OF BACI10BC RECTANGULAR CONNECTOR INSERTS

CAUTION: IF THE TOOL IS TURNED WHILE IT IS IN THE CAVITY, DAMAGE TO THE CONNECTOR INSERT CAN OCCUR.

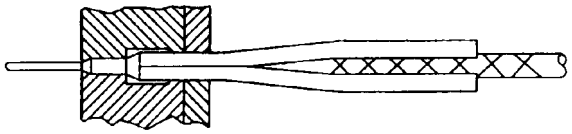

REMOVAL TOOL FULLY INSERTED IN THE CONTACT CAVITY
Figure 14

(5) Carefully pull the wire and the removal tool out of the contact cavity at the same time. Refer to Figure 15.

TOOL AND CONTACT REMOVED FROM THE CAVITY
Figure 15

(6) If the contact is not released:
   (a) Pull the contact removal tool out of the contact cavity.
   (b) Turn the removal tool approximately 90 degrees on its axis.
   (c) Do Step (2) through Step (5) again.

5. CONNECTOR INSERT ASSEMBLY

A. Contact Assembly

This paragraph gives the procedure to assemble size 2222D, 2020, 2018, and 1616 contacts.

Table 8
INSULATION REMOVAL LENGTH

Wire Size (AWG)	Contact Size	Removal Length L (inch)		Special Instructions
		Target	Tolerance	
24	2222D	0.15	±0.02	-
	2020	0.19	±0.03	-
	2018	0.30	±0.03	Fold the conductor back on itself
22	2222D	0.15	±0.02	-
	2020	0.19	±0.03	-
	2018	0.15	±0.03	-
	1616	0.38	±0.03	Fold the conductor back on itself

For training purposes only!

BOEING PROPRIETARY - Copyright © Unpublished Work - See title page for details

ASSEMBLY OF BACI10BC RECTANGULAR CONNECTOR INSERTS

Table 8 (continued)

Wire Size (AWG)	Contact Size	Removal Length L (inch)		Special Instructions
		Target	Tolerance	
20	2020	0.19	±0.03	-
	2018	0.15	±0.03	-
	1616	0.19	±0.03	-
18	2018	0.15	±0.03	-
16	1616	0.19	±0.03	-

Table 9
PIN CONTACT CRIMP TOOLS

Wire Size (AWG)	Contact Size	Crimp Tool				
		Basic Unit		Locator		Turret Position
		Part Number	Setting	Part Number	Color	
24	2222D	M22520/2-01	3	M22520/2-09	-	-
		WA22	3	M22520/2-09	-	-
	2020	M22520/2-01	1	M22520/1-04	Blue	Red
			1	TH163	Blue	Red
			4	M22520/2-10	-	-
		WA22	4	M22520/2-10	-	-
		WA27F	1	M22520/1-04	Blue	Red
			1	TH163	Blue	Red
	2018	M22520/2-01	5	M22520/2-08	-	-
		WA22	5	M22520/2-08	-	-

For training purposes only!

BOEING PROPRIETARY - Copyright © Unpublished Work - See title page for details

ASSEMBLY OF BACI10BC RECTANGULAR CONNECTOR INSERTS

Table 9 (continued)

Wire Size (AWG)	Contact Size	Crimp Tool				
		Basic Unit		Locator		Turret Position
		Part Number	Setting	Part Number	Color	
22	2222D	M22520/2-01	4	M22520/2-09	-	-
		WA22	4	M22520/2-09	-	-
	2020	M22520/2-01	2	M22520/1-04	Blue	Red
			2	TH163	Blue	Red
			5	M22520/2-10	-	-
		WA22	5	M22520/2-10	-	-
		WA27F	2	M22520/1-04	Blue	Red
			2	TH163	Blue	Red
	2018	M22520/2-01	6	M22520/2-08	-	-
		WA22	6	M22520/2-08	-	-
	1616	M22520/1-01	4	M22520/1-02	Blue	Blue
			4	TH163	-	-
		WA27F	4	M22520/1-02	-	-
			4	TH163	-	-
20	2020	M22520/2-01	3	M22520/1-04	Blue	Red
			3	TH163	Blue	Red
			6	M22520/2-10	-	-
		WA22	6	M22520/2-10	-	-
		WA27F	3	M22520/1-04	Blue	Red
			3	TH163	Blue	Red
	2018	M22520/2-01	7	M22520/2-08	-	-
		WA22	7	M22520/2-08	-	-
	1616	M22520/1-01	4	M22520/1-04	Blue	Blue
			4	TH163	Blue	Blue
		WA27F	4	M22520/1-04	Blue	Blue
			4	TH163	Blue	Blue

For training purposes only!

BOEING PROPRIETARY - Copyright © Unpublished Work - See title page for details

ASSEMBLY OF BACI10BC RECTANGULAR CONNECTOR INSERTS

Table 9 (continued)

Wire Size (AWG)	Contact Size	Crimp Tool				
		Basic Unit		Locator		Turret Position
		Part Number	Setting	Part Number	Color	
18	2018	M22520/2-01	5	M22520/1-02	-	-
		WA22	5	M22520/1-02	-	-
	1616	M22520/1-01	5	M22520/1-04	Blue	Blue
			5	TH163	Blue	Blue
		WA27F	5	M22520/1-04	Blue	Blue
			5	TH163	Blue	Blue
16	1616	M22520/1-01	6	M22520/1-04	Blue	Blue
			6	TH163	Blue	Blue
		WA27F	6	M22520/1-04	Blue	Blue
			6	TH163	Blue	Blue

Table 10
SOCKET CONTACT CRIMP TOOLS

Wire Size (AWG)	Contact Size	Crimp Tool				
		Basic Unit		Locator		Turret Position
		Part Number	Setting	Part Number	Color	
24	2222D	M22520/2-01	3	M22520/2-06	-	-
		WA22	3	M22520/2-06	-	-
	2020	M22520/2-01	1	M22520/1-04	Blue	Red
			1	TH163	Blue	Red
			4	M22520/2-10	-	-
		WA22	4	M22520/2-10	-	-
		WA27F	1	M22520/1-04	Blue	Red
			1	TH163	Blue	Red
	2018	M22520/2-01	5	M22520/2-08	-	-
		WA22	5	M22520/2-08	-	-

For training purposes only

BOEING PROPRIETARY - Copyright © Unpublished Work - See title page for details

ASSEMBLY OF BACI10BC RECTANGULAR CONNECTOR INSERTS

Table 10 (continued)

Wire Size (AWG)	Contact Size	Crimp Tool				
		Basic Unit		Locator		Turret Position
		Part Number	Setting	Part Number	Color	
22	2222D	M22520/2-01	4	M22520/2-06	-	-
		WA22	4	M22520/2-06	-	-
	2020	M22520/2-01	2	M22520/1-04	Blue	Red
			2	TH163	Blue	Red
			5	M22520/2-10	-	-
		WA22	5	M22520/2-10	-	-
		WA27F	2	M22520/1-04	Blue	Red
			2	TH163	Blue	Red
	2018	M22520/2-01	6	M22520/2-08	-	-
		WA22	6	M22520/2-08	-	-
	1616	M22520/1-01	4	M22520/1-04	Blue	Blue
			4	TH163	Blue	Blue
		WA27F	4	M22520/1-04	Blue	Blue
			4	TH163	Blue	Blue
20	2020	M22520/2-01	3	M22520/1-04	Blue	Red
			3	TH163	Blue	Red
			6	M22520/2-10	-	-
		WA22	6	M22520/2-10	-	-
		WA27F	3	M22520/1-04	Blue	Red
			3	TH163	Blue	Red
	2018	M22520/2-01	7	M22520/2-08	-	-
		WA22	7	M22520/2-08	-	-
	1616	M22520/1-01	4	M22520/1-04	Blue	Blue
			4	TH163	Blue	Blue
		WA27F	4	M22520/1-04	Blue	Blue
			4	TH163	Blue	Blue

For training purposes only!

BOEING PROPRIETARY - Copyright © Unpublished Work - See title page for details

ASSEMBLY OF BACI10BC RECTANGULAR CONNECTOR INSERTS

Table 10 (continued)

Wire Size (AWG)	Contact Size	Crimp Tool				
		Basic Unit		Locator		Turret Position
		Part Number	Setting	Part Number	Color	
18	2018	M22520/2-01	7	M22520/1-08	-	-
		WA22	7	M22520/1-08	-	-
	1616	M22520/1-01	5	M22520/1-04	Blue	Blue
			5	TH163	Blue	Blue
		WA27F	5	M22520/1-04	Blue	Blue
			5	TH163	Blue	Blue
16	1616	M22520/1-01	6	M22520/1-04	Blue	Blue
			6	TH163	Blue	Blue
		WA27F	6	M22520/1-04	Blue	Blue
			6	TH163	Blue	Blue

Table 11
PERMITTED O.D. FOR WIRE THAT GOES THROUGH THE REAR GROMMET OF THE CONNECTOR INSERT

Contact Cavity Size	Wire Outside Diameter (O.D.) (inch)	
	Minimum	Maximum
22	0.030	0.048
20	0.048	0.071
16	0.065	0.103

(1) Measure the O.D. of the wire.

(2) If the O.D. of the wire is larger than the maximum wire O.D. specified in Table 11, decrease the O.D. of the wire.

Refer to Paragraph 5.C. for the procedure to decrease the O.D. of the wire.

(3) If the O.D. of the wire is not larger than the maximum wire O.D. specified in Table 11:

(a) Remove the necessary length of insulation from the end of the wire.

Refer to:

- Figure 16
- Table 8 for the insulation removal length L
- Subject 20-00-15 for the procedures to remove the insulation.

For training purposes only!

BOEING PROPRIETARY - Copyright © Unpublished Work - See title page for details

ASSEMBLY OF BACI10BC RECTANGULAR CONNECTOR INSERTS

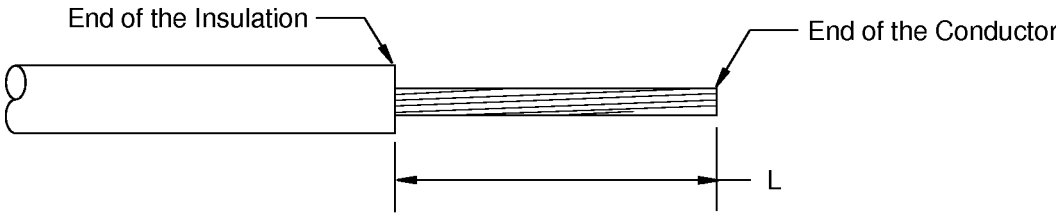

INSULATION REMOVAL LENGTH
Figure 16

(b) If the O.D. of the wire is smaller than the minimum wire O.D. specified in Table 11, increase the O.D. of the wire.

Refer to Paragraph 5.B. for the procedure to increase the O.D. of the wire.

(4) Make a selection of a crimp tool from:
- Table 9 for pin contacts
- Table 10 for socket contacts.

(5) If it is specified in Table 8, fold the conductor back. Refer to Figure 17.

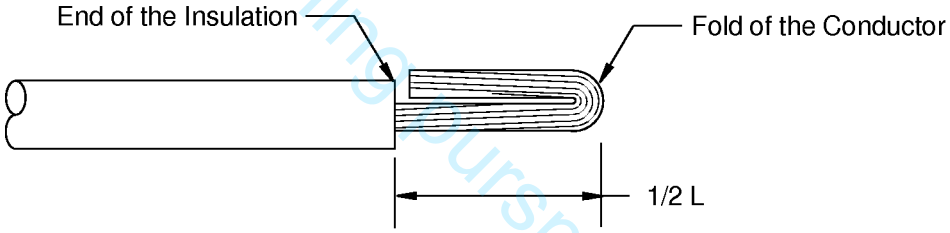

FOLDED BACK CONDUCTOR
Figure 17

(6) Put the conductor in the crimp barrel of the contact. Refer to Figure 18.

Make sure that:
- All of the strands of the conductor are in the crimp barrel
- The conductor can be seen in the inspection hole
- Conductor strands do not come out from the inspection hole
- Wire insulation is not in the crimp barrel
- The distance from the end of the insulation to the end of the crimp barrel is not more than 0.03 inch.

For training purposes only!

BOEING PROPRIETARY - Copyright © Unpublished Work - See title page for details

ASSEMBLY OF BACI10BC RECTANGULAR CONNECTOR INSERTS

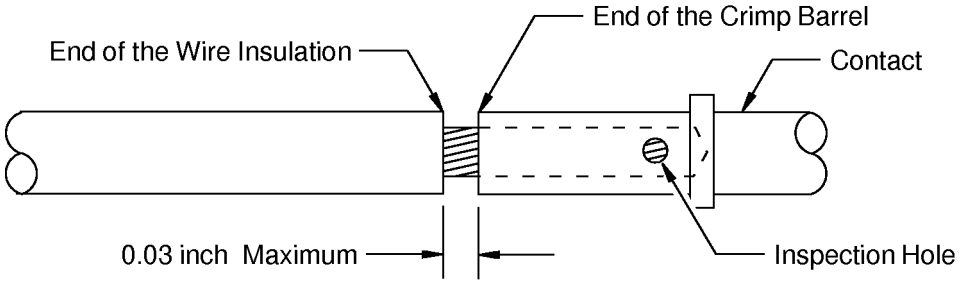

POSITION OF THE WIRE IN THE CRIMP BARREL OF THE CONTACT
Figure 18

(7) Crimp the contact.

Make sure that:

- All of the strands of the conductor are in the crimp barrel
- The conductor can be seen in the inspection hole
- Conductor strands do not come out from the inspection hole
- Wire insulation is not in the crimp barrel
- The distance from the end of the insulation to the end of the crimp barrel is not more than 0.03 inch.

(8) Examine the contact assembly.

Make sure that:

- The crimp barrel has a full crimp indentation
- A bend of the contact crimp barrel does not make the position of the end of the crimp barrel extend farther than the outer edge of the shoulder of the contact
- Conductor strands do not come out from the inspection hole
- A crack in the crimp barrel cannot be seen without magnification.

CAUTION: THE WIRE AT THE END OF THE CRIMP BARREL MUST NOT BE BENT MORE THAN 15 DEGREES FROM THE LONGITUDINAL AXIS OF THE CONTACT. A BEND THAT IS MORE THAN 15 DEGREES CAN CAUSE DAMAGE TO THE WIRE.

NOTE: The color bands can flake when the contact is crimped. This condition is permitted if the colors of the bands can be seen.

NOTE: An indentation that extends into the inspection hole is permitted if:

- The crimp barrel around the inspection hole does not have a crack
- The wire can be seen in the inspection hole.

NOTE: Damage to the end of the crimp barrel can occur during the crimp process. This condition is permitted if:

- The crimp barrel does not have a crack
- The crimp barrel as a full crimp indentation
- The damage does not prevent the usual installation or removal of the contact.

(9) If the decrease of the O.D. of the wire is necessary and one heat shrinkable sleeve is satisfactory:

Refer to Paragraph 5.C..

For training purposes only!

BOEING PROPRIETARY - Copyright © Unpublished Work - See title page for details

(a) Push the single heat shrinkable sleeve forward until the forward end of the sleeve is 0.03 inch or less from the crimp barrel. Refer to Figure 19.

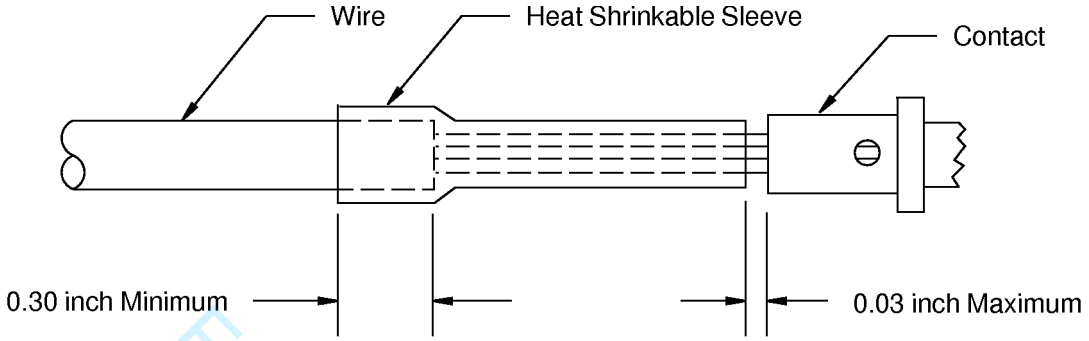

POSITION OF THE SINGLE HEAT SHRINKABLE SLEEVE
Figure 19

(b) Shrink the sleeve into its position. Refer to Subject 20-10-14.

Make sure that:

- The distance between the heat shrinkable sleeve and the contact is not more than 0.03 inch
- The heat shrinkable sleeve makes an overlap of 0.3 inch or more with the wire insulation.
- The wire O.D. of the sleeve adjacent to the contact is larger than specified minimum wire O.D.
- The wire O.D. of the sleeve adjacent to the contact is smaller than the specified maximum wire O.D.

Refer to:

- Figure 19
- Table 11.

(10) If the decrease of the O.D. of the wire with two heat shrinkable sleeves is necessary:

Refer to Paragraph 5.C..

(a) Push the inner sleeve forward until the forward end of the sleeve is 0.03 inch or less from the crimp barrel. Refer to Figure 20.

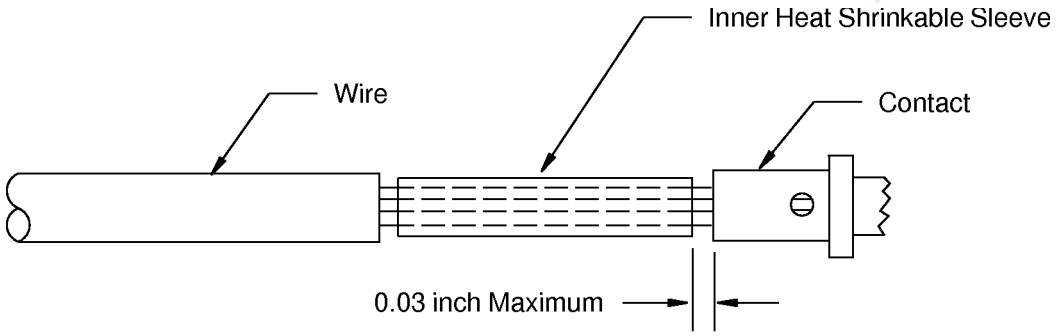

POSITION OF THE INNER HEAT SHRINKABLE SLEEVE
Figure 20

For training purposes only!

BOEING PROPRIETARY - Copyright © Unpublished Work - See title page for details

(b) Shrink the sleeve into its position. Refer to Subject 20-10-14.

- The distance between the forward end of the sleeve and the crimp barrel is not more than 0.03 inch
- The wire O.D. of the inner sleeve is larger than specified minimum wire O.D.
- The wire O.D. of the inner sleeve is smaller than the specified maximum wire O.D.

Refer to:

- Figure 20
- Table 11.

(c) Push the outer sleeve forward until the forward end of the sleeve extends 0.3 inch minimum from the end of the wire insulation. Refer to Figure 21.

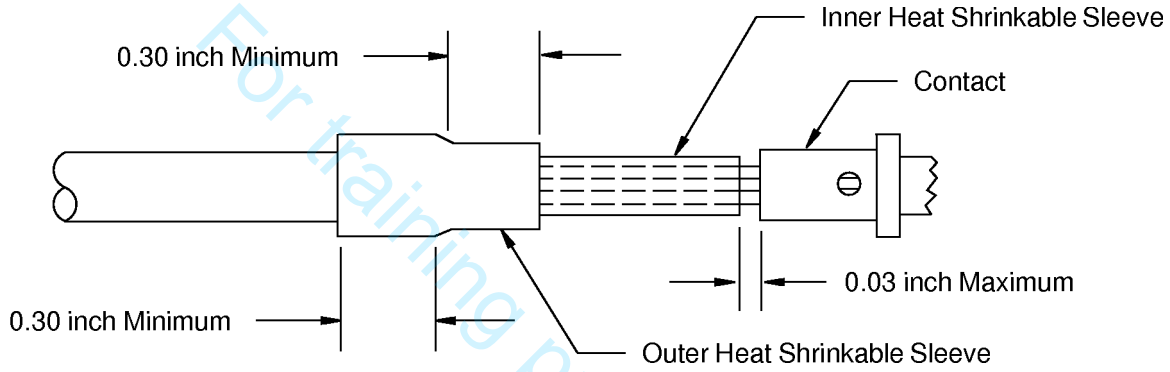

POSITION OF THE OUTER HEAT SHRINKABLE SLEEVE
Figure 21

(d) Shrink the outer sleeve into its position. Refer to Subject 20-10-14.

Make sure that:

- The forward end of the outer sleeve extends 0.3 inch minimum from the end of the insulation of the wire
- The outer sleeve makes an overlap of 0.3 inch or more with the insulation of the wire

B. Increase of the O.D. of the Wire

This paragraph gives the procedures to increase the O.D. of the wire near the contact..

(1) Put a 0.75 inch ±0.05 inch length of a heat shrinkable sleeve on the wire. Refer to Figure 22.

NOTE: This sleeve must:

- Make a fit on the wire insulation
- Shrink down on the wire insulation
- Make the wire diameter larger than specified minimum wire O.D.
- Make the wire diameter smaller than the specified maximum wire O.D.

NOTE: For 787, the sleeve is specified in the post-production wiring data.

Make sure that the forward end of the sleeve is not more than 0.06 inch from the end of the insulation of the wire.

NOTE: If the location of a shield ground wire assembly prevents correct position of the sleeve, the length of the sleeve can be decreased.

BOEING PROPRIETARY - Copyright © Unpublished Work - See title page for details
For training purposes only!

ASSEMBLY OF BACI10BC RECTANGULAR CONNECTOR INSERTS

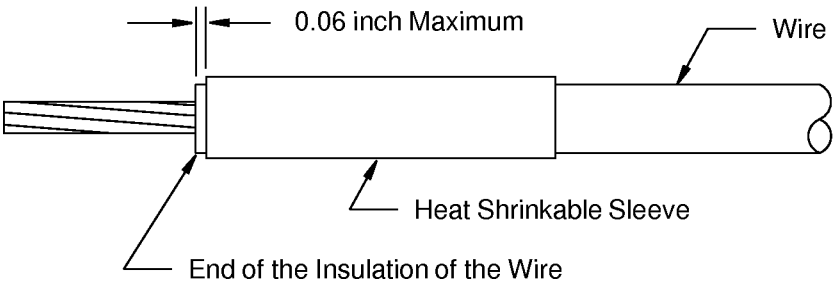

POSITION OF THE SLEEVE ON THE WIRE
Figure 22

(2) If a 0.75 inch ±0.05 inch length of sleeve is not possible, remove the necessary length from the sleeve to make the distance from the rear end of the sleeve to the forward end of the shield termination sleeve equal to 0.12 inch or less. Refer to Figure 23.

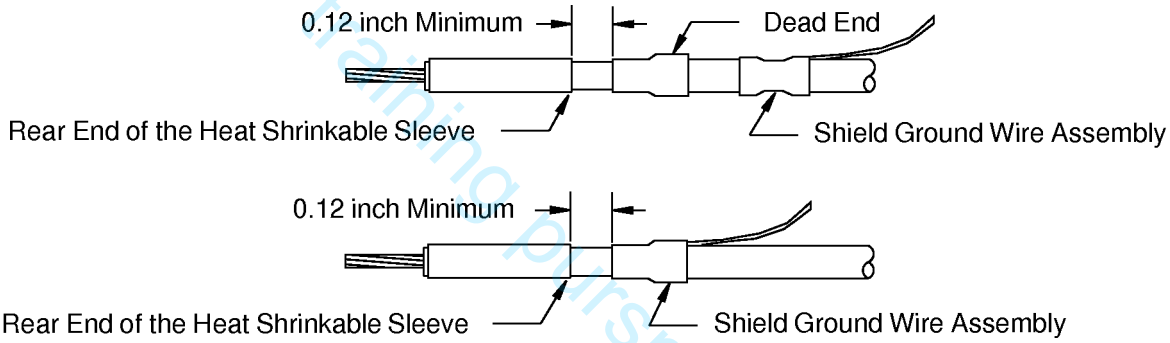

POSITION OF THE SLEEVE WITH A SHIELD GROUND WIRE INSTALLED
Figure 23

(3) Shrink the sleeve into its position. Refer to Subject 20-10-14.

Make sure that:

- The wire O.D. of the sleeve is larger than specified minimum wire O.D.
- The wire O.D. of the sleeve is smaller than the specified maximum wire O.D.

C. Decrease of the O.D. of the Wire

This paragraph and the procedure for contact assembly give the procedures to decrease the O.D. of the wire near the contact.

NOTE: The O.D. of the wire can be decreased with a single heat shrinkable sleeve, or with two heat shrinkable sleeves:

NOTE: If a single sleeve is used, this sleeve must:

- Make a fit on the wire insulation
- Shrink down on the bare conductor
- Make the wire diameter larger than specified minimum wire O.D.
- Make the wire diameter smaller than the specified maximum wire O.D.

Refer to Figure 19 and Table 11.

For training purposes only!

BOEING PROPRIETARY - Copyright © Unpublished Work - See title page for details

ASSEMBLY OF BACI10BC RECTANGULAR CONNECTOR INSERTS

NOTE: If a single heat shrinkable sleeve cannot be found, then two heat shrinkable sleeves are necessary:

- An inner sleeve to shrink down on the bare conductor and make the wire O.D. larger than specified minimum wire O.D. and smaller than the specified maximum wire O.D.

  Refer to Figure 20 and Table 11.
- A shorter outer sleeve to shrink down on the break between the end of the wire insulation and the inner sleeve on the conductor. Refer to Figure 21.

NOTE: For 787, the number of sleeves is specified in the post-production wiring data.

(1) If one sleeve is satisfactory, remove a 1.25 inch ±0.06 inch length of insulation from the end of the wire. Refer to Figure 24.

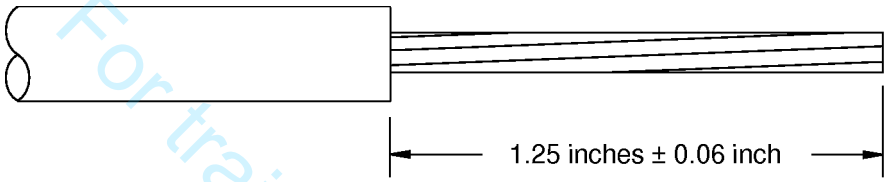

INSULATION REMOVAL LENGTH
Figure 24

(2) Put a 1.6 inch ±0.2 inch length of the heat shrinkable sleeve on the wire.

(3) Move the sleeve away from the end of the wire.

(4) If two sleeves are necessary:

(a) Remove a 1.55 inch ±0.06 inch length of insulation from the end of the wire. Refer to Figure 25.

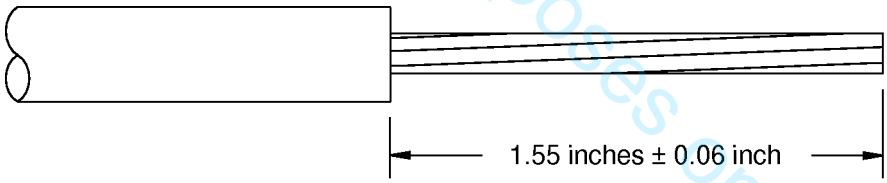

INSULATION REMOVAL LENGTH
Figure 25

(b) Put a 1.3 inch ±0.1 inch length of the inner heat shrinkable sleeve on the wire.

(c) Put a 0.8 inch ±0.1 inch length of the outer heat shrinkable sleeve on the wire.

(5) Move each sleeve away from the end of the wire.

D. Contact Insertion

This paragraph gives the procedure to install size 2222D, 2020, 2018, and 1616 contacts in the connector insert.

NOTE: If a backshell is specified, the necessary backshell components must be put on the wire harness before the contacts are installed.

NOTE: Contacts can be installed in the insert before or after the insert is installed in the connector shell.

For training purposes only!

BOEING PROPRIETARY - Copyright © Unpublished Work - See title page for details

ASSEMBLY OF BACI10BC RECTANGULAR CONNECTOR INSERTS

NOTE: Contact assemblies with AWG 20 or larger wire can be installed without an insertion tool.

Table 12
CONTACT INSERTION TOOLS

Connector Insert Contact Cavity Size	Contact Size	Insertion Tool	
		Part Number	Color
22	2222D	M81969/14-01	Green
		DAK266J	-
20	2020	M81969/14-10	Red
		CIET-20HDL	-
20	2018	M81969/39-01	Green
		CIET-20HDL	-
16	1616	M81969/14-03	Blue
		CIET-16	-

Table 13
LUBRICANTS

Material	Description	Specification	Supplier
Lubricant	Isopropyl Alcohol	TT-I-735	An available source

(1) Make a selection of a contact insertion tool from Table 12.

(2) Examine the insertion tool.

Make sure that:

- The tool is not broken
- The tool tip does not have a bend
- The tool tip does not have burrs, nicks, or sharp edges.

(3) If an insertion tool is used:

(a) Put the contact assembly in the insertion tool. Refer to Figure 26.

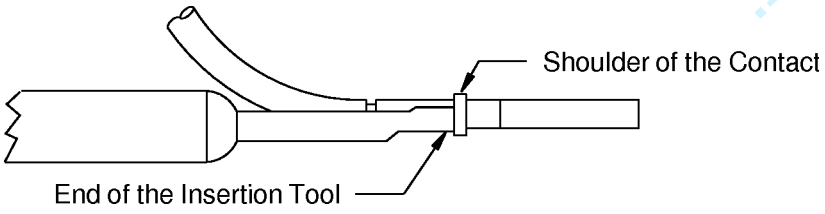

CONTACT INSERTION TOOL
Figure 26

(b) Axially align the insertion tool, the contact assembly and the contact cavity. Refer to Figure 27.

Make sure that the insertion tool and the contact assembly are perpendicular to the rear face of the connector insert.

For training purposes only!

BOEING PROPRIETARY - Copyright © Unpublished Work - See title page for details

ASSEMBLY OF BACI10BC RECTANGULAR CONNECTOR INSERTS

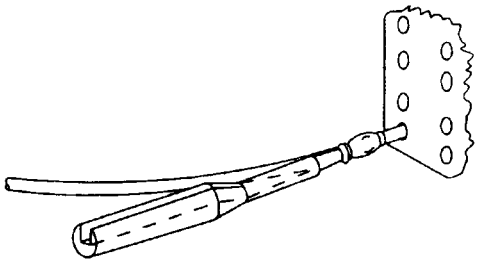

ALIGNMENT OF THE CONTACT ASSEMBLY AND THE CONTACT CAVITY
Figure 27

(c) Carefully push the insertion tool into the contact cavity until it stops. Refer to Figure 28.

Make sure that the insertion tool and the contact cavity stay aligned.

To help make the insertion easier, a lubricant can be applied on the contact assembly and the insertion tool. Refer to Table 13.

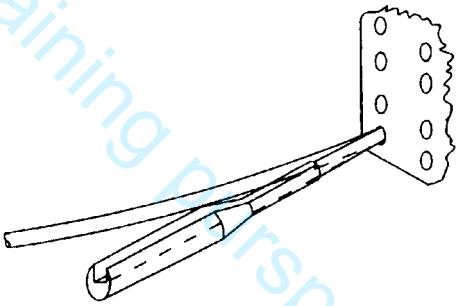

INSERTION OF THE CONTACT INTO THE CAVITY
Figure 28

(d) Carefully pull the insertion tool out of the contact cavity.

Make sure that the insertion tool stays aligned with the contact cavity.

(e) Remove the insertion tool from the wire.

(4) If an insertion tool is not used:

(a) Axially align the contact assembly and the contact cavity.

Make sure that the contact assembly is perpendicular to the rear face of the insert.

(b) Carefully push the contact assembly into the contact cavity until it stops.

Make sure that the contact assembly and the contact cavity stay aligned.

(5) Lightly pull the wire to make sure that the contact is locked in the contact cavity.

For training purposes only!

BOEING PROPRIETARY - Copyright © Unpublished Work - See title page for details

CAUTION: DO NOT PULL THE WIRE WITH A STRONG OR A SUDDEN FORCE. THE FORCE CAN CAUSE DAMAGE TO THE CONNECTOR OR THE CONTACT.

CAUTION: DO NOT MAKE A DENT IN THE WIRE INSULATION WITH THE FINGERNAILS. DAMAGE TO THE WIRE INSULATION CAN CAUSE UNSATISFACTORY PERFORMANCE OF THE WIRE.

(6) If the contact is not locked in the contact cavity:

(a) Pull the contact assembly from the contact cavity.

(b) Do Step (3) or Step (4), and Step (5) again.

E. Seal of an Empty Contact Cavity

Empty contact cavities in the insert must be sealed. Refer to Subject 20-60-08.

6. APPROVED TOOL SUPPLIERS

A. Contact Removal Tools

Table 14
CONTACT REMOVAL TOOL SUPPLIERS

Removal Tool	Supplier
CIET-16	ITT Cannon
CIET-20HDL	ITT Cannon
DRK266J	Daniels
M81969/14-01	QPL
M81969/14-03	QPL
M81969/14-10	QPL
M81969/39-01	QPL

B. Contact Crimp Tools

Table 15
CRIMP TOOL SUPPLIERS

Crimp Tool	Supplier
M22520/1-01	QPL
M22520/2-01	QPL
M22520/1-04	QPL
M22520/2-06	QPL
M22520/2-08	QPL
M22520/2-09	QPL
M22520/2-10	QPL
TH163	Daniels

For training purposes only!

BOEING PROPRIETARY - Copyright © Unpublished Work - See title page for details

ASSEMBLY OF BACI10BC RECTANGULAR CONNECTOR INSERTS

Table 15 (continued)

Crimp Tool	Supplier
WA22	Daniels
WA27F	Daniels

C. Contact Insertion Tools

Table 16
CONTACT INSERTION TOOL SUPPLIERS

Insertion Tool	Supplier
CIET-16	ITT Cannon
CIET-20HDL	ITT Cannon
DAK266J	Daniels
M81969/14-01	QPL
M81969/14-03	QPL
M81969/14-10	QPL
M81969/39-01	QPL

For training pursposes only!

BOEING PROPRIETARY - Copyright © Unpublished Work - See title page for details

CINCH ACIS CONNECTORS, RAYCHEM (TYCO) MTC100, MTCPQ, AND MTCTQ CONNECTORS

Paragraph		Page
1.	GENERAL DATA	1
A.	Damage Conditions - Rear Face of the Insert	1
B.	Damage Conditions - Front Face of the Insert	1
C.	Minimum Wire O.D. for an Environmentally Sealed Connector	2
2.	PART NUMBERS AND DESCRIPTION	3
A.	Connector Part Numbers	3
B.	Connector Description	5
C.	Connector Shell Part Numbers	9
D.	Connector Assembly Component Part Numbers	10
E.	Contact and Eyelet Part Numbers	12
F.	Fiber Optic Cable Assembly Part Numbers	14
G.	Fiber Optic Termini Description	15
3.	INSERT CONFIGURATIONS	15
A.	Cinch ACIS Screw Coupled Connectors	15
B.	Raychem MTC100 Screw Coupled Connectors	16
C.	Raychem MTCPQ Quick Disconnect Connectors	17
D.	Raychem MTCTQ Fiber Optic Connectors	19
4.	CONNECTOR DISASSEMBLY	19
A.	Connector Separation	19
B.	Receptacle Removal	20
C.	Insert Removal	20
D.	Contact Removal	22
E.	Fiber Optic Terminus Removal	22
F.	Seal Plug or Seal Rod Removal	22
5.	CONNECTOR ASSEMBLY	23
A.	Unshielded Wire Preparation	23
B.	Shielded Cable Preparation	24
C.	Assembly of a Shield Ground Wire with a Terminal Lug	26
D.	Assembly of a Shield Ground Wire with a Contact	27
E.	Contact Assembly	28
F.	Contact Assembly with Filler Wire	31
G.	Contact Assembly with an Eyelet	32
H.	Contact Insertion	33
I.	Fiber Optic Terminus Insertion	36
J.	Seal of an Empty Contact Cavity and an Empty Terminus Cavity	36
K.	Insert Installation - Size 1 Shell	36
L.	Insert Installation with Pin Contacts - Size 2 Shell	37
M.	Insert Installation with Socket Contacts - Size 2 Shell	38
N.	Installation of a Cory Ground Block	39

20-74-11 CONTENTS

BOEING PROPRIETARY - Copyright © Unpublished Work - See title page for details

For training purposes only!

Paragraph		Page
5.	**CONNECTOR ASSEMBLY (continued)**	
O.	Installation of a Raychem Ground Block	40
P.	Contact Insertion in the Ground Block	40
Q.	Strain Relief Assembly	41
6.	**CONNECTOR POLARIZATION AND THE CONNECTOR PART NUMBER**	**46**
A.	Connector Polarization and the Connector Part Number	46
B.	Polarization Key Post Positions	47
C.	Change of the Polarization Key Posts	48
D.	Change of the Polarization Code, Any Part of the Connector Part Number, or the Complete Part Number, on the Connector Shell	49
7.	**CONNECTOR INSTALLATION**	**50**
A.	Installation of the ACIS or MTC100 Receptacle in a Panel	50
B.	Installation of the MTCPQ or MTCTQ Receptacle in a Panel	52
C.	Plug and Receptacle Connection	52
8.	**APPROVED TOOL SUPPLIERS**	**55**
A.	Insert Removal Tools	55
B.	Contact and Terminus Removal Tools	55
C.	Contact Crimp Tools	55
D.	Contact and Terminus Insertion Tools	56

For training pursposes only!

20-74-11 CONTENTS

BOEING PROPRIETARY - Copyright © Unpublished Work - See title page for details

CINCH ACIS CONNECTORS, RAYCHEM (TYCO) MTC100, MTCPQ, AND MTCTQ CONNECTORS

1. GENERAL DATA

A. Damage Conditions - Rear Face of the Insert

It is necessary to replace the insert if one or more of these conditions occur:

- The depth of the damage extends farther than the bottom of the outer seal web; refer to Figure 1
- The damage extends from one contact cavity to a different contact cavity; refer to Figure 2
- The damage extends from one contact cavity to the outer edge of the insert; refer to Figure 2.

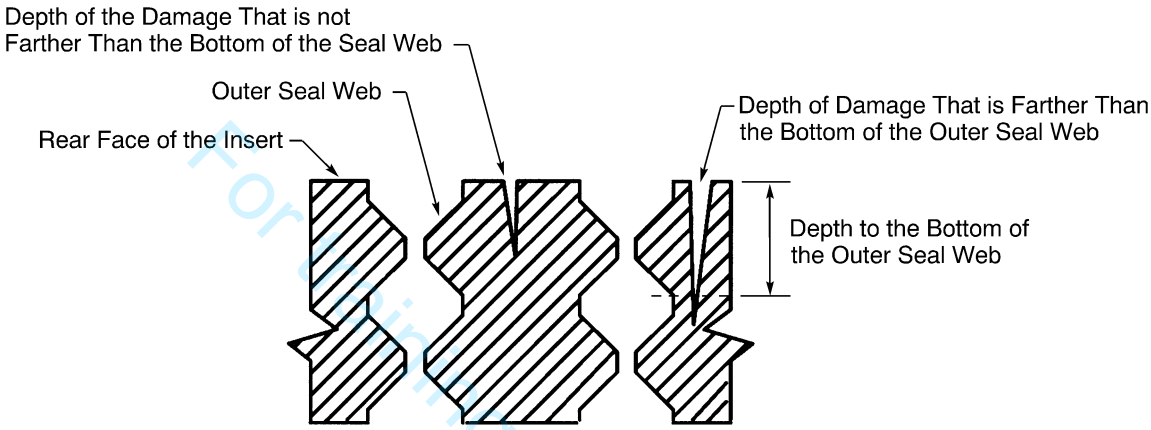

REAR FACE OF THE INSERT - DEPTH OF DAMAGE
Figure 1

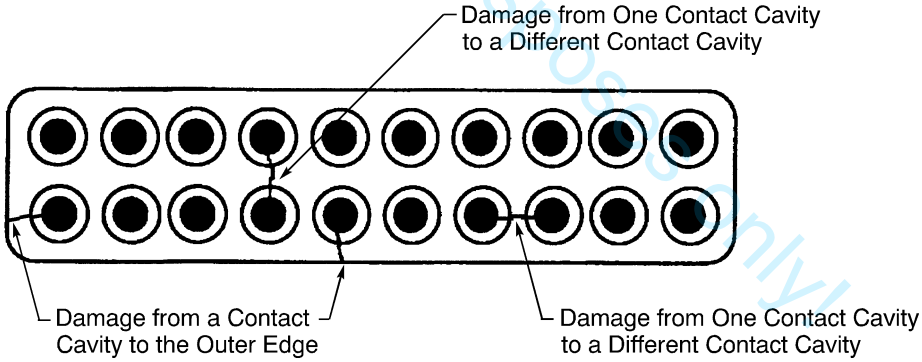

REAR FACE OF THE INSERT - LENGTH OF DAMAGE
Figure 2

B. Damage Conditions - Front Face of the Insert

It is necessary to replace the insert if one of these conditions occur:

- The damage extends from one contact cavity to a different contact cavity
- The damage extends from one contact cavity to the outer edge of the insert.

Refer to Figure 3.

BOEING PROPRIETARY - Copyright © Unpublished Work - See title page for details

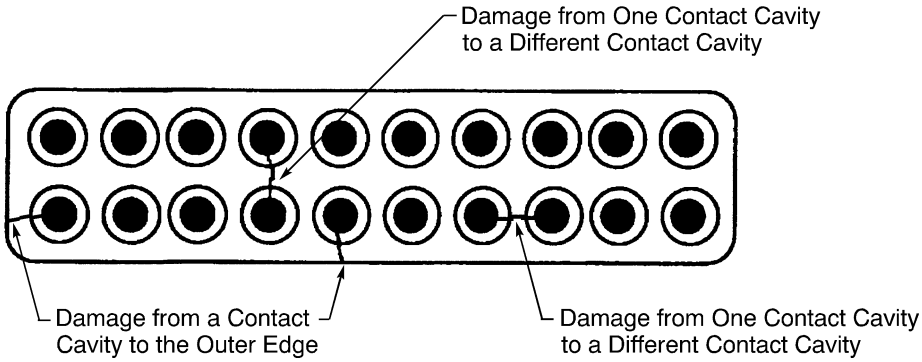

FRONT FACE OF THE INSERT - LENGTH OF DAMAGE
Figure 3

For training purposes only!

C. Minimum Wire O.D. for an Environmentally Sealed Connector

Refer to:

- Subject 20-60-08 for the identification of an environmentally sealed connector
- Table 1 for the minimum wire O.D. that is necessary for a satisfactory seal of a contact cavity hole
- Subject 20-60-08 for the procedure to increase the diameter of the wire.

Table 1
MINIMUM WIRE O.D. FOR A SATISFACTORY SEAL

Connector	Description	Contact Cavity Size	Minimum Wire O.D. (inch)
285-00-()	Rear release, rear removal contacts	16	0.065
		20	0.030
286-00-()	Rear release, rear removal contacts	16	0.065
		20	0.030
MTC100	Rear release, rear removal contacts	16	0.065
		20	0.030
MTCPQ	Rear release, rear removal contacts	16	0.065
		20	0.030

BOEING PROPRIETARY - Copyright © Unpublished Work - See title page for details

CINCH ACIS CONNECTORS, RAYCHEM (TYCO) MTC100, MTCPQ, AND MTCTQ CONNECTORS

2. PART NUMBERS AND DESCRIPTION

A. Connector Part Numbers

Table 2
CONNECTOR PART NUMBERS

Configuration	Shell Size	Part Number	Supplier
Plug	1	285-00-10-002-()	Cinch
		MTC100-JH1-P32-()	Raychem
	2	285-00-20-002-()	Cinch
		MTC100-JH2-P12-()	Raychem
		MTC100-JH2-P32-()	Raychem
Plug, Quick Disconnect	1	MTCPQKT1P()	Raychem
	2	MTCPQKT2P()	Raychem
	1	MTCTQKT1P4FPF	Raychem
Receptacle	1	286-00-10-002-()	Cinch
		MTC100-JH1-R32-()	Raychem
	2	286-00-20-002-()	Cinch
		MTC100-JH2-R32-()	Raychem
Receptacle, Quick Disconnect	1	MTCPQKT1R()	Raychem
	2	MTCPQKT2R()	Raychem
	1	MTCTQKT1R4FSF	Raychem
Receptacle with Mounting Flange	1	286-00-10-006-()	Cinch
		MTC100-SH1-F32-()	Raychem
	2	286-00-20-006-()	Cinch
		MTC100-SH2-F32-()	Raychem

For training purposes only!

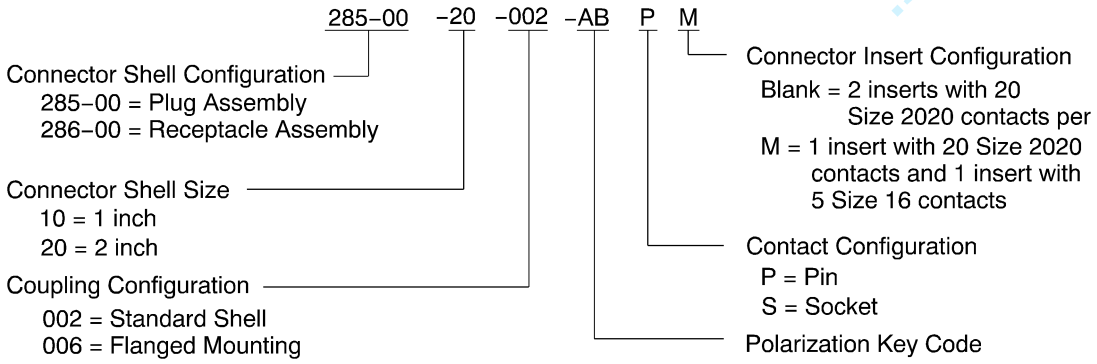

CINCH ACIS CONNECTOR PART NUMBER STRUCTURE
Figure 4

BOEING PROPRIETARY - Copyright © Unpublished Work - See title page for details

CINCH ACIS CONNECTORS, RAYCHEM (TYCO) MTC100, MTCPQ, AND MTCTQ CONNECTORS

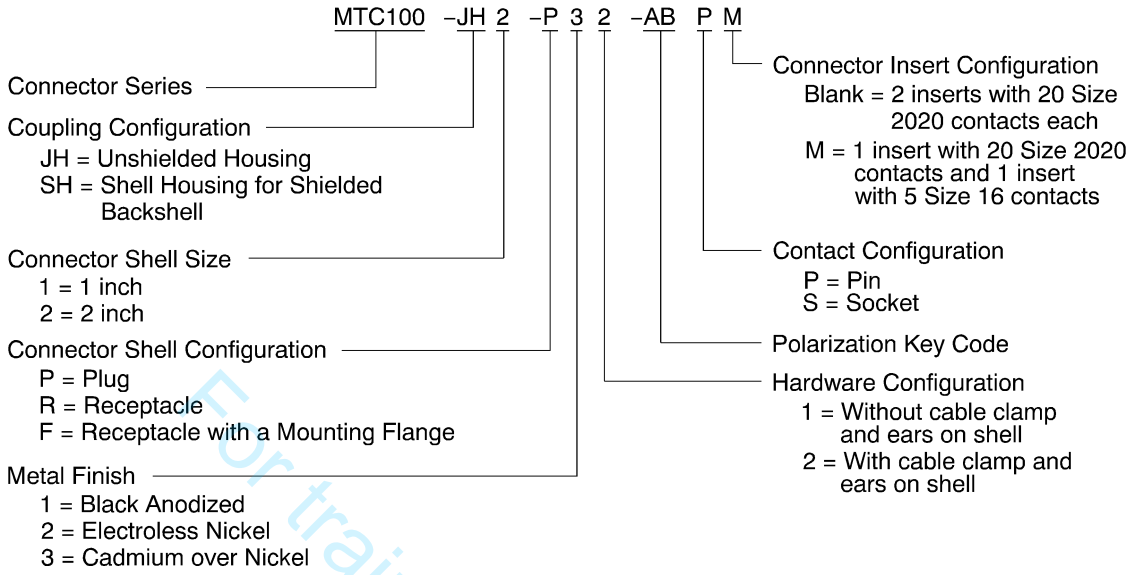

RAYCHEM MTC100 CONNECTOR PART NUMBER STRUCTURE
Figure 5

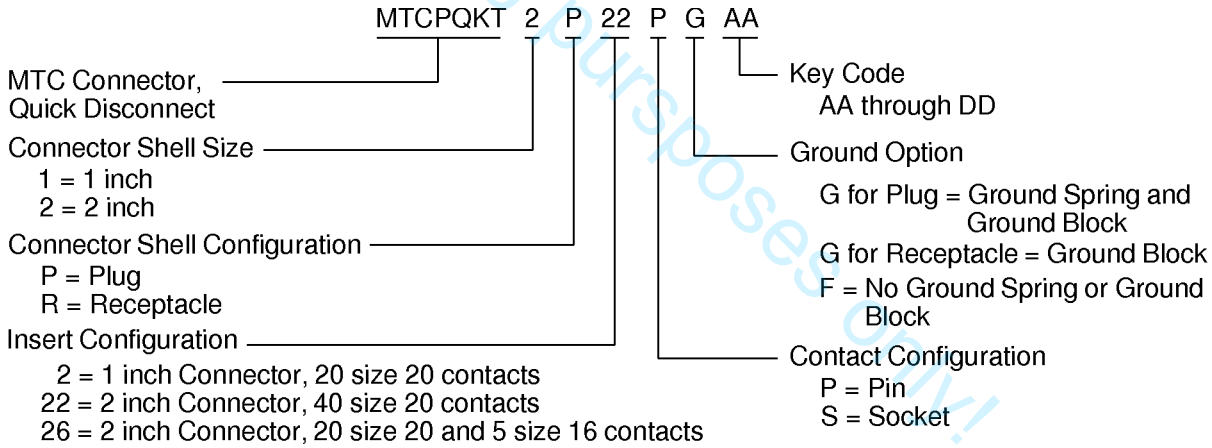

RAYCHEM MTCPQ CONNECTOR PART NUMBER STRUCTURE
Figure 6

For training purposes only!

BOEING PROPRIETARY - Copyright © Unpublished Work - See title page for details

CINCH ACIS CONNECTORS, RAYCHEM (TYCO) MTC100, MTCPQ, AND MTCTQ CONNECTORS

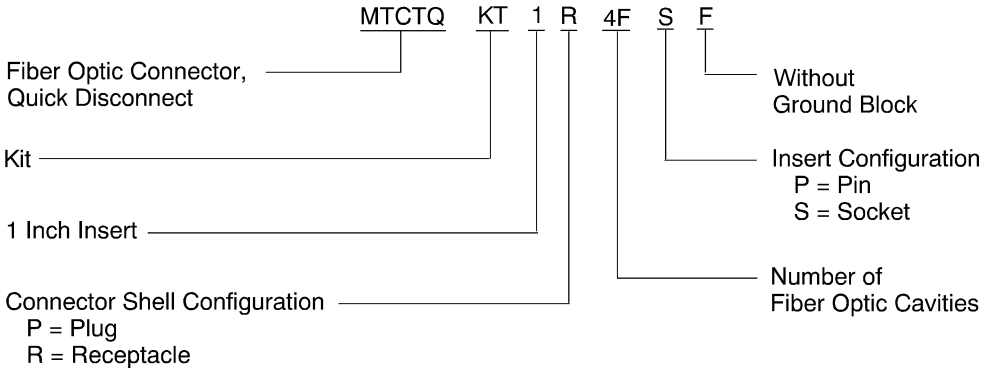

RAYCHEM MTCTQ CONNECTOR PART NUMBER STRUCTURE
Figure 7

For training purposes only!

B. Connector Description

The ACIS or MTC100 connector has these technical features:

- A captivated jack screw coupling mechanism
- A rectangular metal shell
- Two shell sizes
- An inline plug
- An inline receptacle or panel mounted receptacle
- Removable inserts
- Rear release, rear removal, crimp contacts.

BOEING PROPRIETARY - Copyright © Unpublished Work - See title page for details

CINCH ACIS CONNECTORS, RAYCHEM (TYCO) MTC100, MTCPQ, AND MTCTQ CONNECTORS

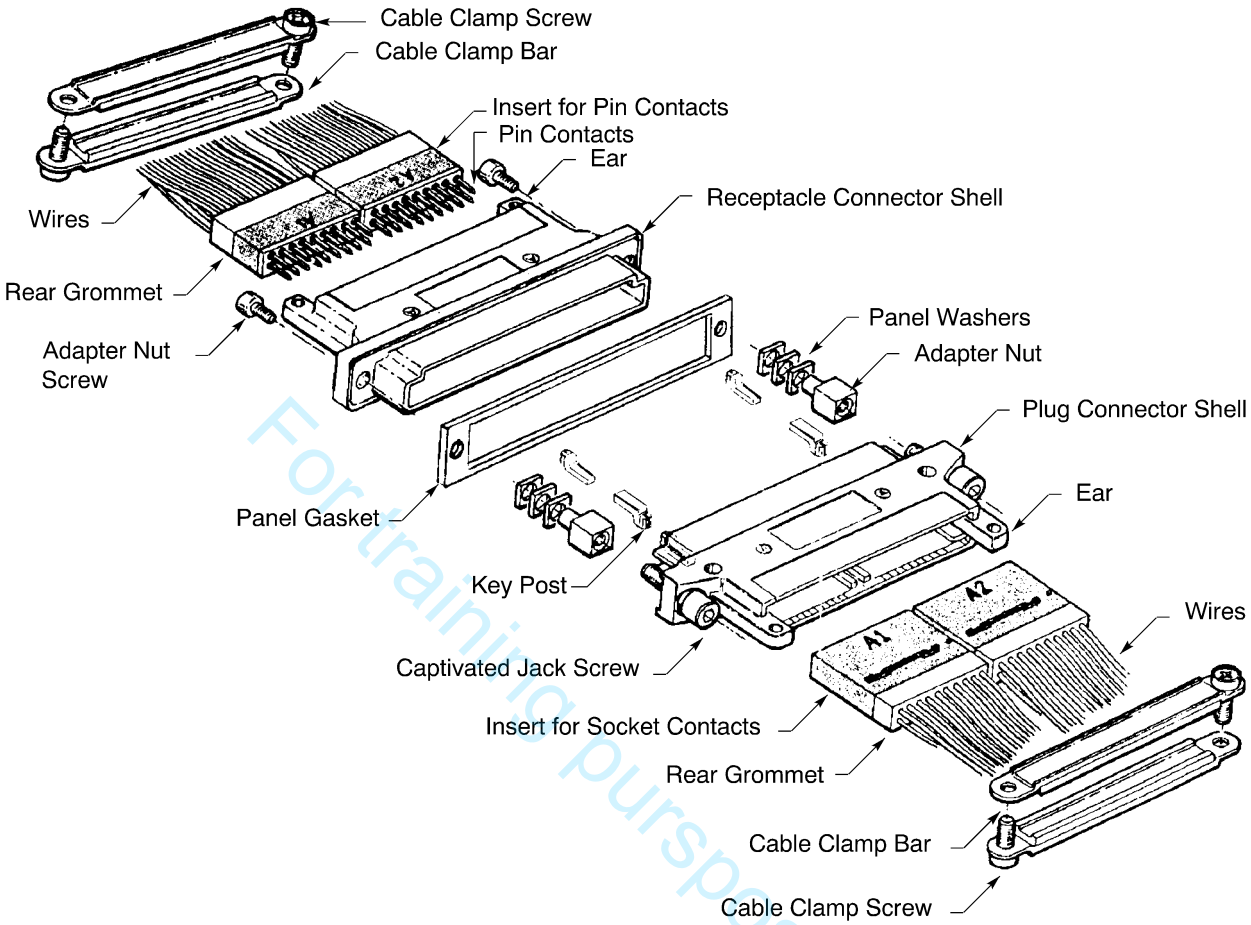

ACIS OR MTC100 CONNECTOR CONFIGURATION
Figure 8

For training purposes only!

The MTCPQ connector has these technical features:

- A quick disconnect coupling mechanism
- A rectangular metal shell
- Two shell sizes
- An inline plug
- An inline receptacle or panel mounted receptacle
- Removable inserts
- Rear release, rear removal crimp contacts
- A ground block in alternative plug and receptacle configurations
- Ground springs in alternative plug configurations.

BOEING PROPRIETARY - Copyright © Unpublished Work - See title page for details

CINCH ACIS CONNECTORS, RAYCHEM (TYCO) MTC100, MTCPQ, AND MTCTQ CONNECTORS

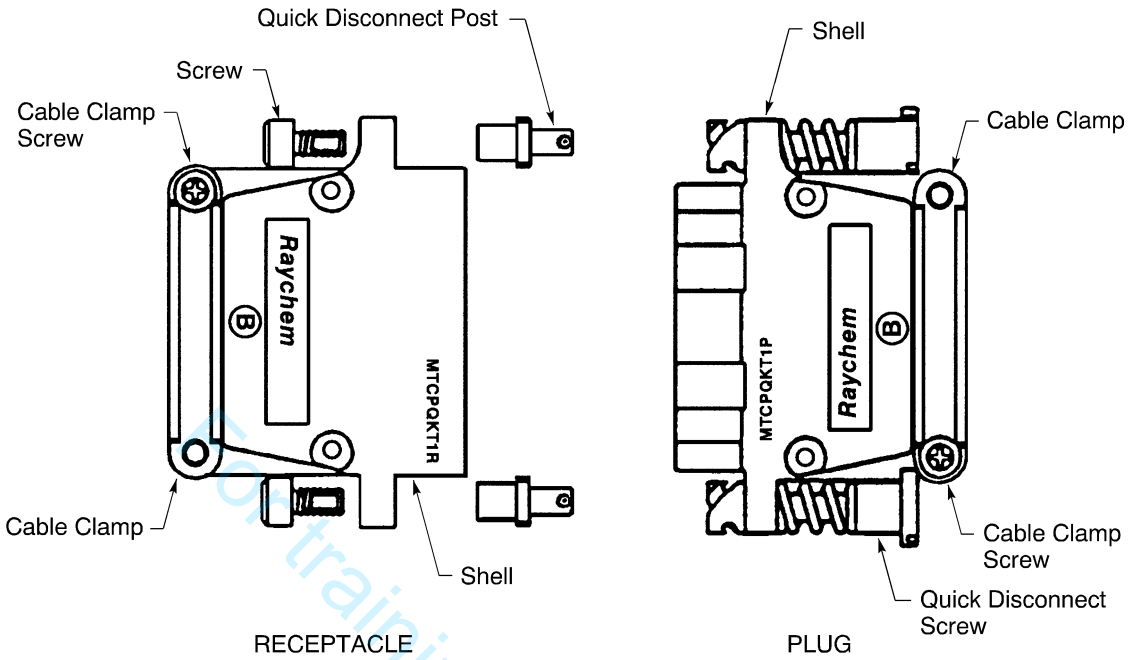

MTCPQ CONNECTOR CONFIGURATION
Figure 9

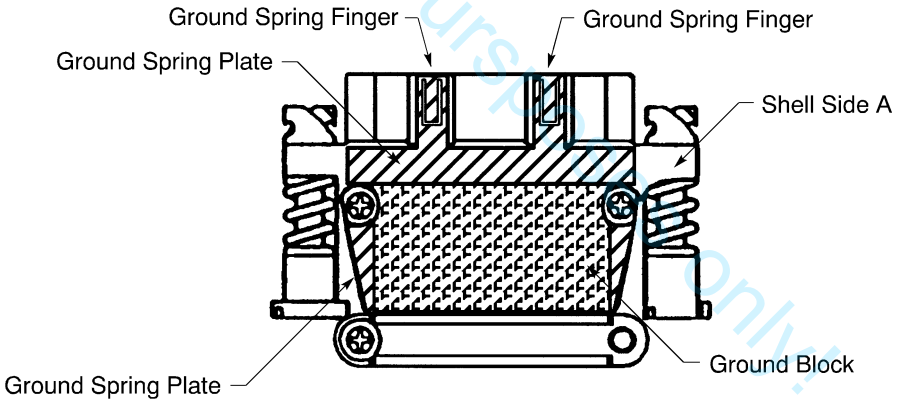

MTCPQ PLUG CONNECTOR WITH GROUND BLOCK
Figure 10

For training purposes only!

BOEING PROPRIETARY - Copyright © Unpublished Work - See title page for details

CINCH ACIS CONNECTORS, RAYCHEM (TYCO) MTC100, MTCPQ, AND MTCTQ CONNECTORS

The MTCTQ connector has these technical features:

- An insert for fiber optic contact termini
- A rectangular metal shell
- One shell size
- Two backshell brackets
- An inline plug
- A panel mounted receptacle
- A quick disconnect coupling mechanism
- Removable insert that have fiber optic contact termini
- Rear release, rear removal, size 16 fiber optic contact termini

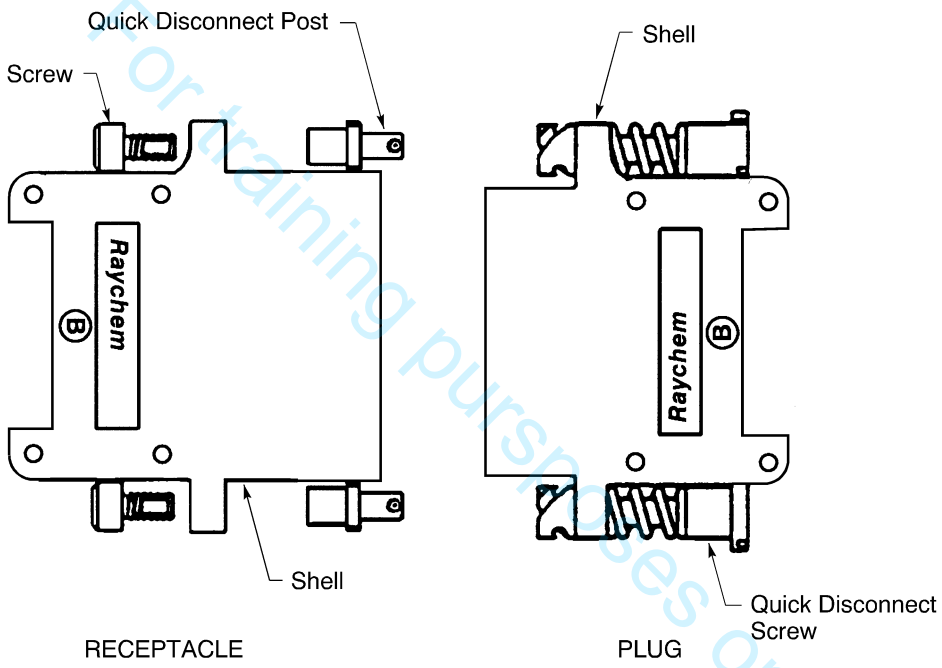

MTCTQ CONNECTOR CONFIGURATION
Figure 11

For training purposes Only!

BOEING PROPRIETARY - Copyright © Unpublished Work - See title page for details

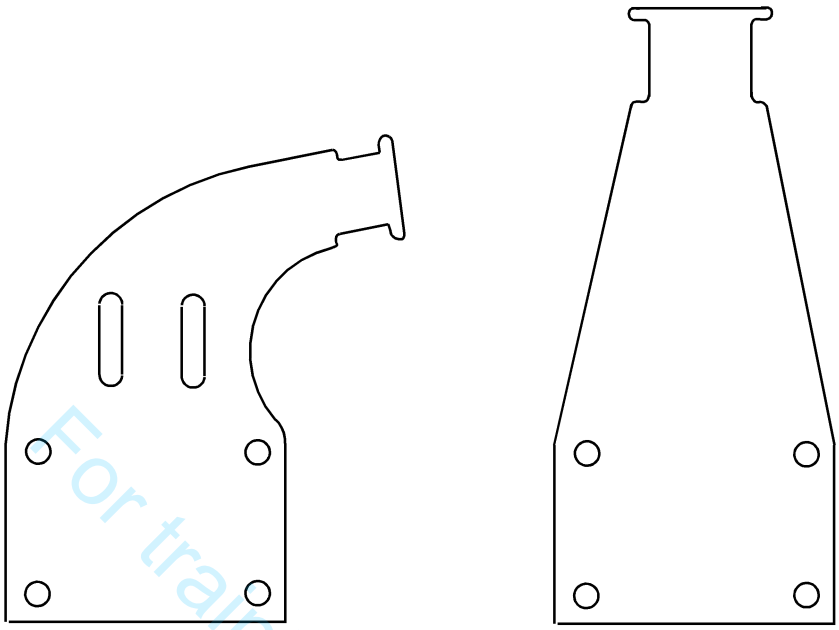

Right and Left Cable Bracket

Straight Cable Bracket

MTCTQ BACKSHELL BRACKETS
Figure 12

C. Connector Shell Part Numbers

Table 3
MTC100 CONNECTOR SHELL PART NUMBERS

Connector Type	Shell Size	Connector Shell	
		Part Number	Supplier
Plug	1	MTCP100-JH1-P32	Raychem
	2	MTCP100-JH2-P12	Raychem
		MTCP100-JH2-P32	Raychem
Receptacle	1	MTCP100-JH1-R32	Raychem
	2	MTCP100-JH2-R32	Raychem
Receptacle with Mounting Flange	1	MTCP100-SH1-F32	Raychem
	2	MTCP100-SH2-F32	Raychem

For training purposes only!

BOEING PROPRIETARY - Copyright © Unpublished Work - See title page for details

Table 4
MTCPQ CONNECTOR SHELL PART NUMBERS

Connector Type	Shell Size	Connector Shell	
		Part Number	Supplier
Plug	1	MTC100Q-SH1-P22	Raychem
	2	MTC100Q-SH2-P22	Raychem
Receptacle	1	MTC100Q-SH1-R22	Raychem
	2	MTC100Q-SH2-R22	Raychem

Table 5
MTCTQ CONNECTOR SHELL PART NUMBERS

Connector Type	Shell Size	Connector Shell	
		Part Number	Supplier
Plug	1	MTCTQ-YH1-P22	Raychem
Receptacle	1	MTCTQ-YH1-R22	Raychem

For training purposes only!

D. Connector Assembly Component Part Numbers

Table 6
MTC100 CONNECTOR ASSEMBLY COMPONENT PART NUMBERS

Component	Part Number	Supplier
Key Post, Polarization	D-659-0045	Raychem
Kit, Connector Assembly	CHA-0051-003	Raychem
Nut, Adapter	CHA-0095	Raychem
Screw, Adapter	CHA-0094	Raychem
Screw, Cable Clamp	462-92-27-429	Raychem
	NAS514P440-()P	QPL
Washer, Panel	CHA-0093	Raychem

Table 7
MTC100 CONNECTOR ASSEMBLY KIT COMPONENTS

Kit	Component	Quantity
CHA-0051-003	Key Post, Polarization	2
	Nut, Adapter	2
	Screw, Adapter	2
	Washer, Panel	6

BOEING PROPRIETARY - Copyright © Unpublished Work - See title page for details

Table 8
MTCPQ CONNECTOR ASSEMBLY COMPONENT PART NUMBERS

Component	Connector Type	Shell Size	Part Number	Supplier
Clamp Kit	-	1	CHA-0298	Raychem
		2	CHA-0299	Raychem
Ground Spring	Plug	1	CHA-0291	Raychem
		2	CHA-0292	Raychem
Key Post	-	-	D-659-0045	Raychem
Post, Quick Disconnect	Receptacle	-	CHA-0297	Raychem
Screw Kit, Quick Disconnect	Plug	-	CHA-0295	Raychem
Screw, Adapter, Quick Disconnect	Receptacle	-	CHA-0296	Raychem
Screw, Plain	-	-	NAS8200A6	QPL
Screw, Self Lock	-	-	NAS8200AL6	QPL

Table 9
MTCPQ CONNECTOR GROUND BLOCK PART NUMBERS

Connector Type	Shell Size	Ground Block	
		Part Number	Supplier
Plug	1	CGH10C-22	Cory Components
		CHA0303	Raychem
	2	CGH20C-22	Cory Components
		CHA0304	Raychem
Receptacle	1	CGH10C-22	Cory Components
		CHA0301	Raychem
	2	CGH20C-22	Cory Components
		CHA0302	Raychem

For training purposes Only!

BOEING PROPRIETARY - Copyright © Unpublished Work - See title page for details

Table 10
MTCTQ CONNECTOR ASSEMBLY COMPONENT PART NUMBERS

Shell Size	Connector Type	Shell	Component	Part Number	Supplier
1	Plug	MTCTQ-YH1-P22	Clamp Kit, Straight	CHA-1598	Raychem
		MTCTQ-YH1-P22	Clamp Kit, Angled	CHA-1599	Raychem
		MTCTQ-YH1-P22	Dust Cap	D-659-0060	Raychem
		MTCTQ-YH1-P22	Insert	MTCTQ-116-001P	Raychem
	Receptacle	MTCTQ-YH1-S22	Clamp Kit, Straight	CHA-1598	Raychem
		MTCTQ-YH1-S22	Clamp Kit, Angled	CHA-1599	Raychem
		MTCTQ-YH1-S22	Dust Cap	CHA-1600	Raychem
		MTCTQ-YH1-S22	Insert	MTCTQ-116-001S	Raychem
		MTCTQ-YH1-S22	Post and Screw Kit	CHA-0295	Raychem

E. Contact and Eyelet Part Numbers

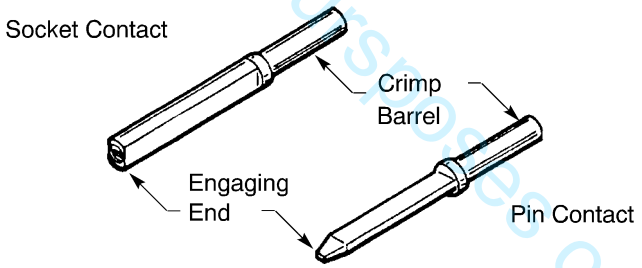

SIZE 2220 BLADE (PIN) AND TUNING FORK (SOCKET) CONTACTS
Figure 13

For training purposes only!

BOEING PROPRIETARY - Copyright © Unpublished Work - See title page for details

CINCH ACIS CONNECTORS, RAYCHEM (TYCO) MTC100, MTCPQ, AND MTCTQ CONNECTORS

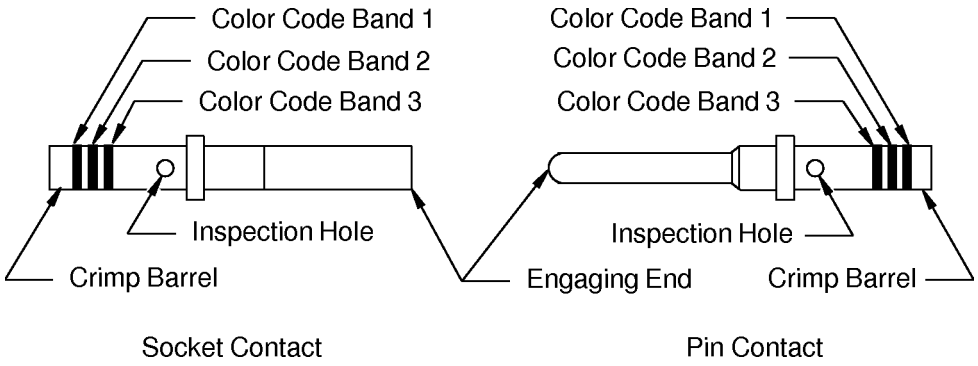

ROUND M39029/( ) REAR RELEASE CONTACTS
Figure 14

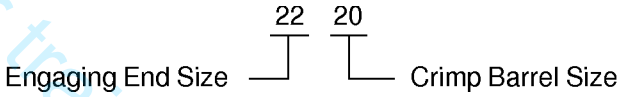

EXAMPLE OF A CONTACT SIZE
Figure 15

For training purposes only!

Table 11
CONNECTOR CONTACT PART NUMBERS

Contact Size	Contact Style	Contact Type	Contact Part Number	Supplier	Color Code	
					Color	Band
2220	Blade	Pin	462-44-16-478	Cinch	-	-
			CTA-0166	Raychem	-	-
	Tuning Fork	Socket	318-01-99-036	Cinch	-	-
			CTA-0165	Raychem	-	-
1616	Round	Pin	M39029/58-364	QPL	Orange	1
					Blue	2
					Yellow	3
		Socket	M39029/57-358	QPL	Orange	1
					Green	2
					Gray	3

Table 12
EYELET PART NUMBERS

Eyelet Part Numbers	
Part Number	**Supplier**
CE46F	Circon
Y-6015-C	International Eyelets Inc.

BOEING PROPRIETARY - Copyright © Unpublished Work - See title page for details

Table 13
ALTERNATIVE EYELET PART NUMBERS

Specified Eyelet		Alternative Eyelet	
Part Number	**Supplier**	**Part Number**	**Supplier**
Y-6015-C	International Eyelets Inc.	S-6049CUAU	Global Supply

Table 14
GROUND BLOCK CONTACT PART NUMBERS

Contact Size	Contact Style	Contact Type	Contact Part Number	Supplier	Color Code	
					Color	**Band**
2222	Round	Pin	M39029/58-360	QPL	Orange	1
					Blue	2
					Black	3

F. Fiber Optic Cable Assembly Part Numbers

Table 15
FIBER OPTIC CABLE ASSEMBLY PART NUMBERS

Cable Assembly Part Number	Cable Part Number	Terminus Part Number	Terminus Quantity	Supplier
BACC69A( )	BMS13-71T01C01GA	BACT64A( )	2	RadiaII
BACC69C( )	BMS13-71T04C02GA	BACT64A( )	4	RadiaII

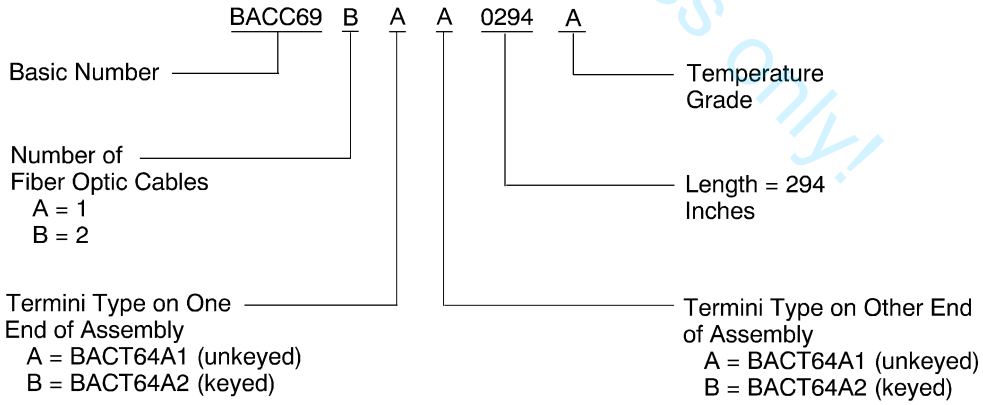

FIBER OPTIC CABLE ASSEMBLY PART NUMBER STRUCTURE
Figure 16

For training purposes only!

BOEING PROPRIETARY - Copyright © Unpublished Work - See title page for details

G. Fiber Optic Termini Description

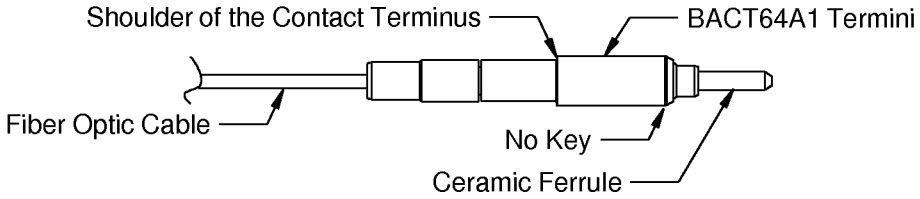

FIBER OPTIC CONTACT TERMINUS
Figure 17

3. INSERT CONFIGURATIONS

A. Cinch ACIS Screw Coupled Connectors

NOTE: The contact cavity size that is specified in Table 16 is equivalent to the size of the crimp barrel of the contact.

Table 16
CINCH ACIS CONNECTOR INSERT CONFIGURATIONS

Shell Size	Contact Cavities			Insert				
	Type	Count	Size	Position	Identifier	Part Number	Supplier	Reference
1	Pin	20	20	-	Single	318-07-99-001	Cinch	Figure 18
	Socket	20	20	-	Single	318-07-99-002	Cinch	Figure 18
2	Pin	20	20	Primary	1-10	318-07-99-014	Cinch	Figure 19
		20	20	Secondary	11-20	318-07-99-015	Cinch	
	Socket	20	20	Primary	1-10	318-07-99-016	Cinch	Figure 19
		20	20	Secondary	11-20	318-07-99-017	Cinch	

NOTE: Figure 18 and Figure 19 show the rear face of inserts that have pin contacts. The view of the rear face of inserts that have socket contacts is the mirror image of this view.

NOTE: Where there are two rows of contacts, the name of a contact cavity is the side of the connector followed by the contact cavity number. Side A or B is marked on the connector shell. For example contact B14 is near side B of the connector at contact cavity position 14. Refer to Figure 19.

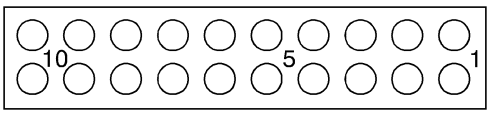

SINGLE CINCH ACIS CONNECTOR INSERT
Figure 18

For training purposes only

BOEING PROPRIETARY - Copyright © Unpublished Work - See title page for details

CINCH ACIS CONNECTORS, RAYCHEM (TYCO) MTC100, MTCPQ, AND MTCTQ CONNECTORS

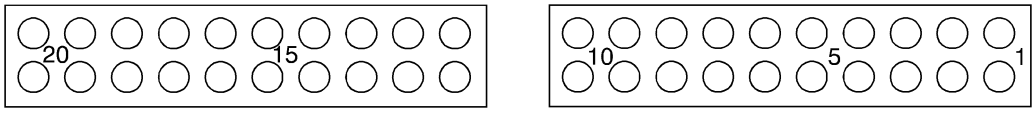

CONFIGURATION OF THE INSERTS IN A SHELL SIZE 2 CINCH ACIS CONNECTOR
Figure 19

B. Raychem MTC100 Screw Coupled Connectors

NOTE: The contact cavity size that is specified in Table 17 is equivalent to the size of the crimp barrel of the contact.

Table 17
RAYCHEM MTC100 CONNECTOR INSERT CONFIGURATIONS

Shell Size	Contact Cavities			Insert				
	Type	Count	Size	Position	Identifier	Part Number	Supplier	Reference
-	-	-	-	-	Blank	D-659-0004	Raychem	Figure 20
1	Pin	20	20	-	Single	MTCP-122-20P	Raychem	Figure 21
	Socket	20	20	-	Single	MTCP-122-20S	Raychem	Figure 21
2	Pin	20	20	Primary	1-10	MTCP-122-20P1	Raychem	Figure 22
		20	20	Secondary	11-20	MTCP-122-20P2	Raychem	
	Pin	20	20	Primary	1-10	MTCP-122-20P1	Raychem	Figure 23
		5	16	Secondary	F-K	MTCP-116-05P2	Raychem	
	Socket	20	20	Primary	1-10	MTCP-122-20S1	Raychem	Figure 22
		20	20	Secondary	11-20	MTCP-122-20S2	Raychem	
	Socket	20	20	Primary	1-10	MTCP-122-20S1	Raychem	Figure 23
		5	16	Secondary	F-K	MTCP-116-05S2	Raychem	

NOTE: Figure 21 through Figure 23 show the rear face of inserts that have pin contacts. The view of the rear face of inserts that have socket contacts is the mirror image of this view.

NOTE: Where there are two rows of contacts, the name of a contact cavity is the side of the connector followed by the contact cavity number. Side A or B is marked on the connector shell. For example contact B14 is near side B of the connector at contact cavity position 14. Refer to Figure 22.

BLANK INSERT
Figure 20

For training purposes only!

BOEING PROPRIETARY - Copyright © Unpublished Work - See title page for details

CINCH ACIS CONNECTORS, RAYCHEM (TYCO) MTC100, MTCPQ, AND MTCTQ CONNECTORS

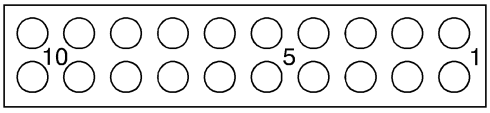

SINGLE INSERT THAT HAS 20 CONTACT CAVITIES IDENTIFIED 1 - 10
Figure 21

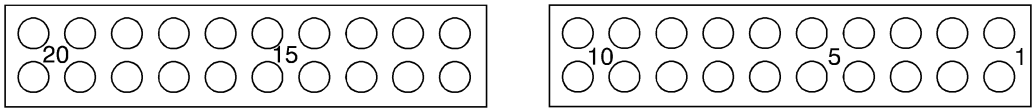

CONFIGURATION OF THE INSERTS IN A SHELL SIZE 2 CONNECTOR THAT HAS 40 CONTACT CAVITIES IDENTIFIED 1 - 20
Figure 22

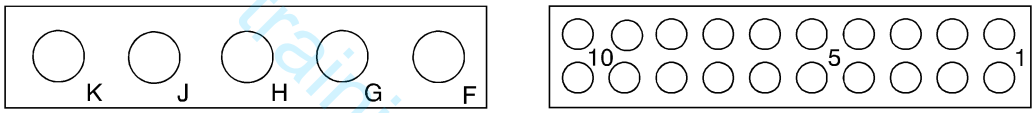

CONFIGURATION OF THE INSERTS IN A SHELL SIZE 2 CONNECTOR THAT HAS 25 CONTACT CAVITIES IDENTIFIED 1 - 10 AND F - K
Figure 23

For training purposes only

C. Raychem MTCPQ Quick Disconnect Connectors

NOTE: The contact cavity size that is specified in Table 18 is equivalent to the size of the crimp barrel of the contact.

Table 18
RAYCHEM MTCPQ CONNECTOR INSERT CONFIGURATIONS

Shell Size	Contact Cavities			Insert				
	Type	Count	Size	Configuration	Position	Part Number	Supplier	Reference
-	-	-	-	Blank	-	D-659-0004	Raychem	Figure 24
1	Pin	20	20	2	-	MTCP-122-20PQ	Raychem	Figure 25
	Socket	20	20	2	-	MTCP-122-20S	Raychem	Figure 25
2	Pin	20	20	22	Primary	MTCP-122-20PQ1	Raychem	Figure 26
					Secondary	MTCP-122-20PQ2	Raychem	
	Socket	20	20	22	Primary	MTCP-122-20S1	Raychem	Figure 26
					Secondary	MTCP-122-20S2	Raychem	
	Pin	20	20	26	Primary	MTCP-122-20PQ1	Raychem	Figure 27
		5	16		Secondary	MTCP-116-05P2	Raychem	
	Socket	20	20	26	Primary	MTCP-122-20S1	Raychem	Figure 27
		5	16		Secondary	MTCP-116-05S2	Raychem	

BOEING PROPRIETARY - Copyright © Unpublished Work - See title page for details

CINCH ACIS CONNECTORS, RAYCHEM (TYCO) MTC100, MTCPQ, AND MTCTQ CONNECTORS

NOTE: Figure 25 through Figure 27 show the rear face of inserts that have pin contacts. The view of the rear face of inserts that have socket contacts is the mirror image of this view.

NOTE: Where there are two rows of contacts, the name of a contact cavity is the side of the connector followed by the contact cavity number. Side A or B is marked on the connector shell. For example contact B7 is near side B of the connector at contact cavity position 7. Refer to Figure 27.

BLANK INSERT
Figure 24

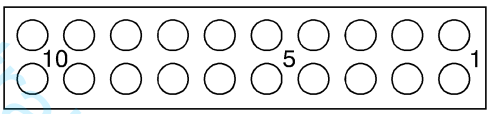

SINGLE INSERT THAT HAS 20 CONTACT CAVITIES IDENTIFIED 1 - 10
Figure 25

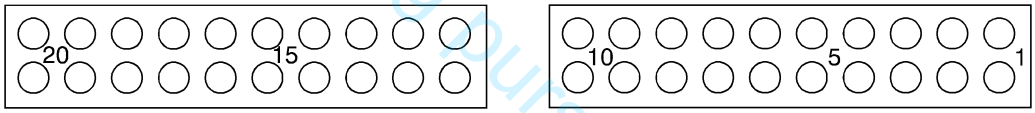

CONFIGURATION OF THE INSERTS IN A SHELL SIZE 2 CONNECTOR THAT HAS 40 CONTACT CAVITIES IDENTIFIED 1 - 20
Figure 26

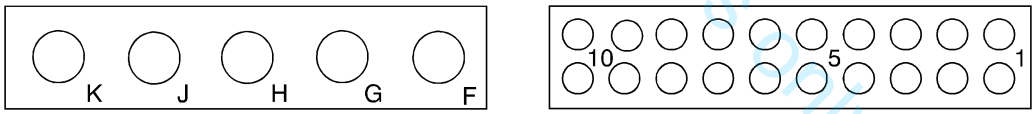

CONFIGURATION OF THE INSERTS IN A SHELL SIZE 2 CONNECTOR THAT HAS 25 CONTACT CAVITIES IDENTIFIED 1 - 10 AND F - K
Figure 27

For training purposes only.

BOEING PROPRIETARY - Copyright © Unpublished Work - See title page for details

D. Raychem MTCTQ Fiber Optic Connectors

Table 19
RAYCHEM MTCTQ CONNECTOR INSERT CONFIGURATIONS

Shell Size	Contact Cavities			Insert		
	Type	Count	Size	Part Number	Supplier	Reference
1	Fiber Optic Pin Terminus	4	16	MTCTQ-116-001P	Raychem	Figure 28
	Fiber Optic Socket Terminus	4	16	MTCTQ-116-001S	Raychem	Figure 28

NOTE: Figure 28 shows the rear face of an insert that has pin contacts. The view of the rear face of an insert that has socket contacts is the mirror image of this view.

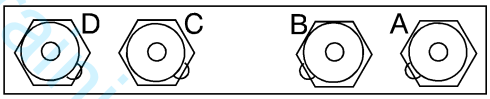

INSERT THAT HAS 4 FIBER OPTIC TERMINUS CAVITIES
Figure 28

For training purposes only!

4. CONNECTOR DISASSEMBLY

A. Connector Separation

(1) For an ACIS or a MTC100 connector:

(a) Make a selection of one of these tools:
- A 7/64 inch hex-head driver with or without a ball type end
- A 7/64 inch allen wrench with or without a ball type end.

(b) Turn one of the captivated jack screws two turns in the counterclockwise direction.

(c) Turn the other captivated jack screw two turns in the counterclockwise direction.

(d) Do Step (b) and Step (c) again until each jack screw is disengaged from each adapter nut.

(e) Pull the plug out of the receptacle.

(2) For an MTCPQ and MTCTQ connectors:

(a) Make a selection of one of these tools:
- A 7/64 inch hex-head driver with or without a ball type end
- A 7/64 inch allen wrench with or without a ball type end
- A screwdriver.

(b) At the same time, push one of the quick disconnect fasteners with the tool and make a 1/2 turn in the counterclockwise direction.

(c) At the same time, push the other quick disconnect fastener with the tool and make a 1/2 turn in the counterclockwise direction.

(d) Pull the plug out of the receptacle.

BOEING PROPRIETARY - Copyright © Unpublished Work - See title page for details

B. Receptacle Removal

CAUTION: MAKE SURE TO KEEP ALL OF THE PANEL WASHERS, PANEL GASKET, AND THE ADAPTER NUTS FROM THE FRONT OF THE CONNECTOR. THEY ARE NECESSARY TO INSTALL THE RECEPTACLE AGAIN.

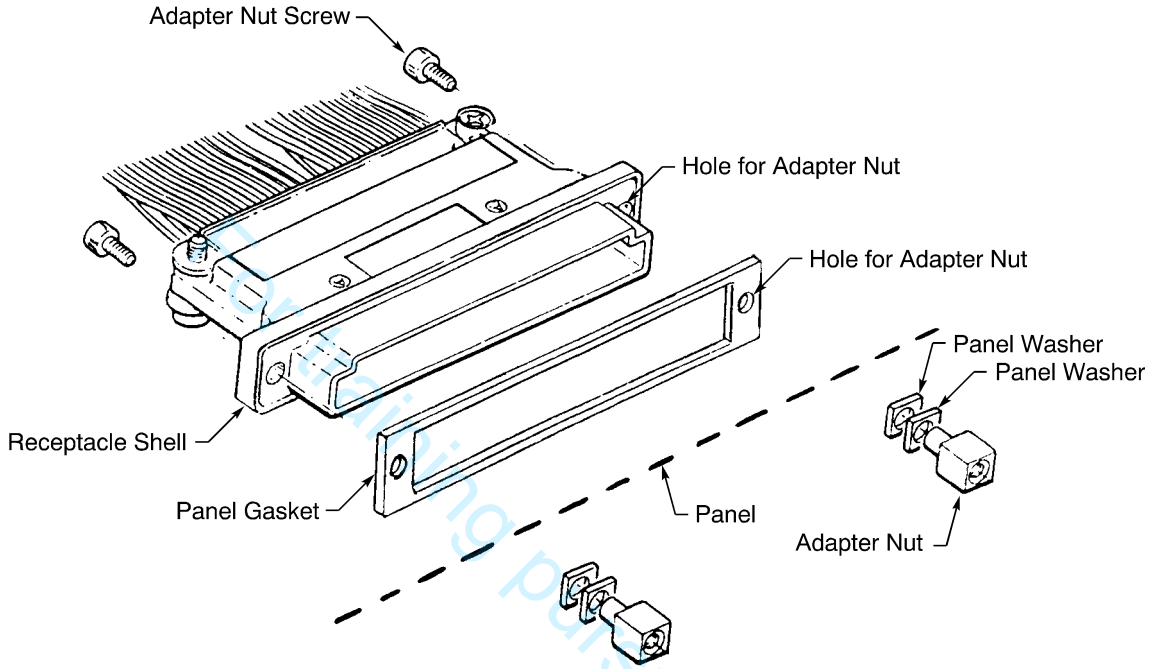

RECEPTACLE SHELL REMOVAL FROM A PANEL
Figure 29

(1) Make a selection of one of these tools:
- A 7/64 inch hex-head driver with or without a ball type end
- A 7/64 inch allen wrench with or without a ball type end.

(2) From the rear of the panel, remove one of the adapter nut screws that attach the connector to the panel. Refer to Figure 29.

(3) From the rear of the panel, remove the other screw.

CAUTION: MAKE SURE TO KEEP ALL OF THE PANEL WASHERS AND THE ADAPTER NUTS FROM THE FRONT OF THE CONNECTOR. THEY ARE NECESSARY TO INSTALL THE RECEPTACLE AGAIN.

(4) Pull the receptacle from the rear of the panel.

CAUTION: IF THERE IS A PANEL GASKET AT THE REAR OF THE PANEL, MAKE SURE TO KEEP THE GASKET.

C. Insert Removal

NOTE: Contacts or termini can be removed from the insert with the connector inserts in the connector shell.

For training purposes only!

BOEING PROPRIETARY - Copyright © Unpublished Work - See title page for details

Table 20
INSERT REMOVAL TOOLS

Shell Size	Removal Tool
1	599-11 11 596
	CTA-0161
2	599-11 11 596
	CTA-0161

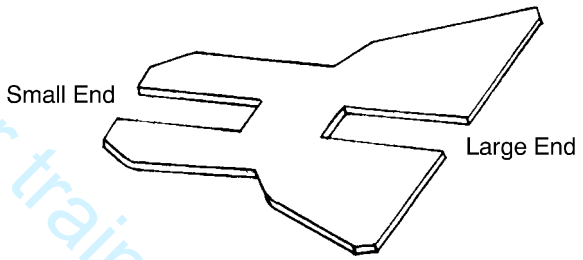

INSERT REMOVAL TOOL
Figure 30

For training purposes only!

(1) Loosen the screws on the cable clamp bars. Refer to Figure 8.

NOTE: It is not necessary to remove the contacts or termini from the connector insert.

(2) Remove the cable clamp bars and the terminal lugs of the shield ground wires from the ears of the connector shell.

(3) Make a selection of an insert removal tool from Table 20. Refer to Figure 30.

NOTE: Two tools are necessary to remove an insert.

(4) Put a removal tool on each side of the connector insert in the rear of the connector shell.

Make sure to use the:

- The small end of the removal tools for a Size 1 shell
- The large end of the removal tools for a Size 2 shell.

(5) At the same time, push each of the tools into the connector until each tool releases the retention clips and stop.

(6) If the connector insert has assembled contacts or termini:

(a) Hold the wires and carefully pull the insert from the connector shell.

(b) If the insert or inserts do not move when the wires are pulled, do Step (4) through Step (5) again.

(7) If the connector insert does not have assembled contacts or termini:

(a) Put a plastic awl on the front face of the insert.

(b) Push the insert out of the connector shell.

BOEING PROPRIETARY - Copyright © Unpublished Work - See title page for details

D. Contact Removal

Table 21
CONTACT REMOVAL TOOLS

Crimp Barrel Size	Removal Tool		
	Part Number	Color	Type
22	M81969/14-01	White	Plastic
20	ATBO-2062	Green	Metal
	ATT 2059	-	Metal Tweezers
	CTA-1160	Green	Plastic
	DRK 237	-	Metal Tweezers
	RRX22RC	-	Metal
16	11-8675-16	White	-
	11-8795-16	White	-
	DRK95-16B	Blue	Metal
	M81969/14-03	White	Plastic
	M81969/8-08	Blue	Metal
	MS27495R16	White	-
	MS27534-16	White	-
	RX16-9	White	-

NOTE: Contacts can be removed from the insert with the connector inserts in the connector shell.

(1) Make a selection of the contact removal tool from Table 21.
(2) Remove the cable clamp bars from the rear of the connector. Refer to Paragraph 4.C.
(3) Put the tip of the tool on the wire near the rear grommet.
(4) Axially align the tool and the contact cavity.
(5) Carefully push the tool into the contact cavity until it stops.
(6) Pull the wire and the tool out of the contact cavity at the same time.
(7) If the contact is not released:
    (a) Pull the contact removal tool out of the contact cavity.
    (b) Turn the tool approximately 10 degrees.
    (c) Do Step (3) through Step (6) again.

E. Fiber Optic Terminus Removal

Refer to the procedures for Contact Terminus Removal in Subject 20-12-21.

F. Seal Plug or Seal Rod Removal

(1) Make a selection of a pair of needle nose pliers that has smooth surfaces and no sharp edges.

For training purposes only!

BOEING PROPRIETARY - Copyright © Unpublished Work - See title page for details

CAUTION: NEEDLE NOSE PLIERS WITH A ROUGH SURFACE OR A SHARP EDGE CAN CAUSE DAMAGE TO THE REAR GROMMET.

(2) Hold the end of the seal plug or seal rod tightly in the jaws of the needle nose pliers.

(3) Pull the seal plug or the seal rod out of the contact cavity in the direction that is perpendicular to the face of the rear grommet.

5. CONNECTOR ASSEMBLY

A. Unshielded Wire Preparation

Table 22
HEAT SHRINKABLE SLEEVES

Part Number or Specification	Supplier
AMS-DTL-23053/12 Class 5	An available source
RW-175	Raychem
TFE-4X	Chemplast
	Zeus

Table 23
UNSHIELDED WIRE PREPARATION

Connector	Wire O.D. (inch)	Removal Length L (inch)		Heat Shrinkable Sleeve Length (inch)	
		Target	Tolerance	Target	Tolerance
ACIS	Less than or equal to 0.061	0.20	±0.03	-	-
	More than 0.061	1.10	±0.06	1.15	±0.06
MTC100	Less than or equal to 0.061	0.20	±0.03	-	-
	More than 0.061	1.10	±0.06	1.15	±0.06
MTCPQ	Less than or equal to 0.061	0.20	±0.03	-	-
	More than 0.061	1.25	±0.06	1.50	±0.06

For training purposes only!

BOEING PROPRIETARY - Copyright © Unpublished Work - See title page for details

CINCH ACIS CONNECTORS, RAYCHEM (TYCO) MTC100, MTCPQ, AND MTCTQ CONNECTORS

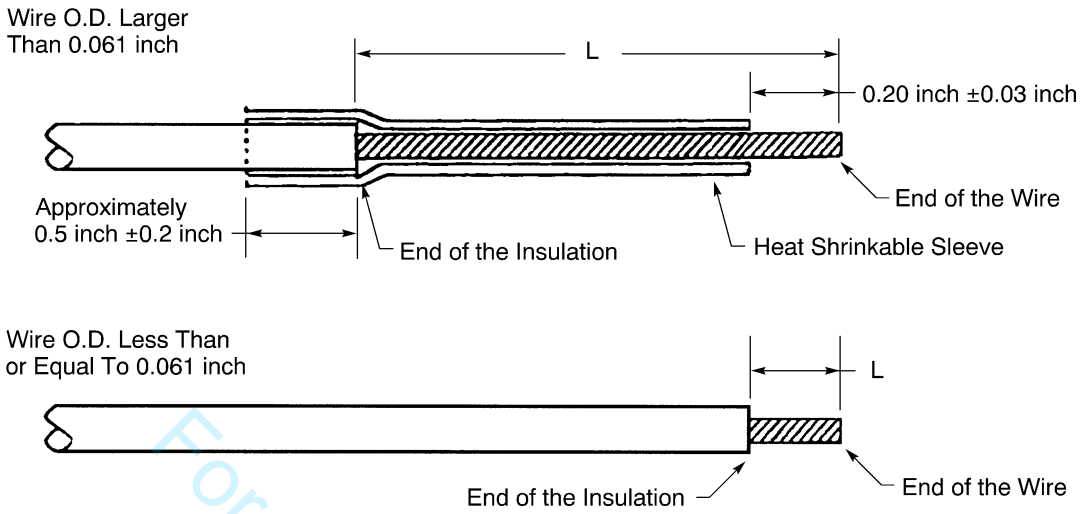

UNSHIELDED WIRE PREPARATION
Figure 31

For training purposes only!

Refer to Table 23 and Figure 31.

(1) Remove the necessary length of insulation from the end of the wire.

(2) If a heat shrinkable sleeve is specified:

(a) Make a selection of a heat shrinkable sleeve from Table 22.

NOTE: For alternate heat shrinkable sleeves, refer to Subject 20-00-11.

(b) Push the necessary length of heat shrinkable sleeve on the wire until the forward end of the sleeve is 0.20 inch 0.03 ±inch from the end of the wire.

Make sure that the sleeve makes approximately a 0.5 inch ±0.2 inch overlap with the wire insulation.

(c) Shrink the sleeve into its position. Refer to Subject 20-10-14.

(3) For size 16 and larger contact cavities:

(a) Measure the O.D. of the wire.

(b) If the O.D. of the wire is less than the minimum seal diameter of the connector grommet hole, increase the O.D. of the wire. Refer to Paragraph 1.C.

B. Shielded Cable Preparation

Table 24
OUTER JACKET REMOVAL LENGTH

Connector Series	Wire O.D. (inch)	Removal Length L (inch)	
		Target	Tolerance
ACIS	Less than or equal to 0.061	1.80	±0.05
	Larger than 0.061	2.25	±0.10

BOEING PROPRIETARY - Copyright © Unpublished Work - See title page for details

CINCH ACIS CONNECTORS, RAYCHEM (TYCO) MTC100, MTCPQ, AND MTCTQ CONNECTORS

Table 24 (continued)

Connector Series	Wire O.D. (inch)	Removal Length L (inch)	
		Target	Tolerance
MTC100	Less than or equal to 0.061	1.80	±0.05
	Larger than 0.061	2.25	±0.10
MTCPQ	Less than or equal to 0.061	2.00	±0.10
	Larger than 0.061	2.25	±0.10

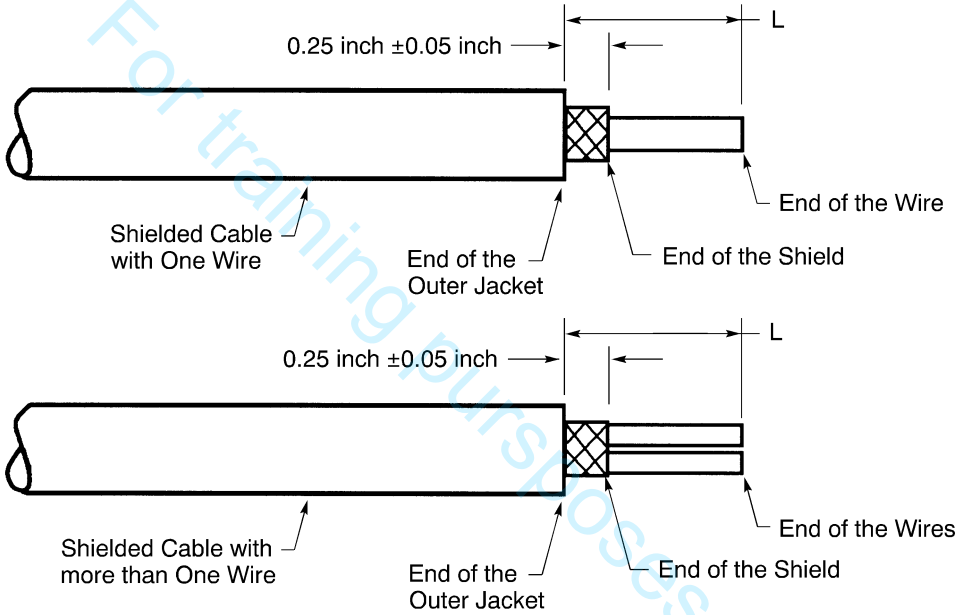

SHIELDED CABLE PREPARATION
Figure 32

For training purposes only!

Refer to Table 24 and Figure 32.

(1) Remove the necessary length of outer jacket from the end of the cable.

(2) Remove the necessary length of the shield that makes the distance from the end of the shield to the end of the outer jacket equal to 0.25 inch ±0.05 inch.

(3) Assemble the necessary shield ground wires.

Refer to:

- Paragraph 5.C. for the ACIS and MTC100 connectors
- Paragraph 5.D. for the MTCPQ connector.

(4) Prepare each wire. Refer to Paragraph 5.A.

BOEING PROPRIETARY - Copyright © Unpublished Work - See title page for details

C. Assembly of a Shield Ground Wire with a Terminal Lug

Table 25
SHIELD GROUND WIRE TERMINAL LUGS

Terminal Lug	Maximum Number of Shield Ground Wires	Supplier
321892	3	AMP
BACT12AR222	1	QPL
BACT12AC2	3	QPL
BACT12M2	3	QPL

(1) Make a selection of an AWG 22 wire for a shield ground wire. Refer to Subject 20-10-15 for the type of wire.

(2) Cut a 2.0 inch ±0.1 inch length of the wire.

(3) Assemble the shield ground wire with a solder sleeve. Refer to Subject 20-10-15.

Make sure that the shield ground wire makes an exit from the end of the solder sleeve that is adjacent to the connector. Refer to Figure 33.

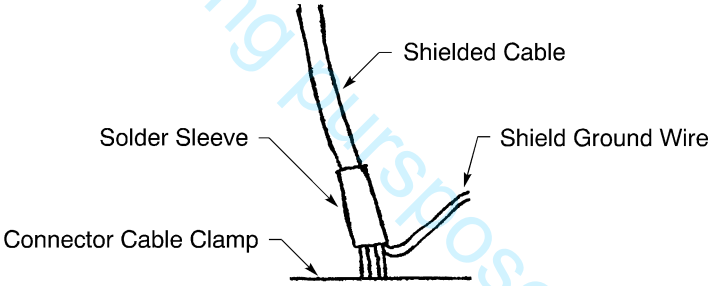

SHIELD GROUND WIRE CONFIGURATION
Figure 33

(4) Assemble a terminal lug on the end of the wire or wires:

(a) Make a selection of a terminal lug from Table 25.

(b) Remove 0.17 inch ±0.01 inch of insulation from the end of each shield ground wire.

(c) Crimp the wire or wires in the crimp barrel of the terminal lug. Refer to Subject 20-30-11.

For training purposes only!

BOEING PROPRIETARY - Copyright © Unpublished Work - See title page for details

D. Assembly of a Shield Ground Wire with a Contact

Table 26
SHIELD GROUND WIRE LENGTH

Shield Ground Wire Contact Installation	Cable Configuration	Length (inch)	
		Minimum	Maximum
Connector Contact Cavity	Shielded cable with one shield	2.5	2.8
	Shielded cable with two shields	-	4.0
	Microdot 202-3836-000	-	6.0
Ground Block Contact Cavity	Shielded cable with one shield	1.5	1.8
	Shielded cable with two shields	-	3.0
	Microdot 202-3836-000	-	5.0

Table 27
GROUND BLOCK CONTACT CRIMP TOOLS

Wire Size (AWG)	Crimp Barrel Size	Crimp Tool			
		Basic Unit		Locator	
		Part Number	Setting	Part Number	Color
22	22	M22520/2-01	4	M22520/2-09	-
		WA22	4		

(1) Make a selection of a shield ground wire. Refer to Subject 20-10-15 for the type of wire. Make that the wire is AWG 22.

(2) Cut the necessary length of the ground wire. Refer to Table 26.

(3) Assemble the shield ground wire with a solder sleeve. Refer to Subject 20-10-15.
Make sure that the shield ground wire makes an exit from the end of the solder sleeve that is:
- Not adjacent to the connector for Microdot 202-3836-000 cable; refer to Figure 34
- Adjacent to the connector for other shielded cables; refer to Figure 33.

For training purposes only

BOEING PROPRIETARY - Copyright © Unpublished Work - See title page for details

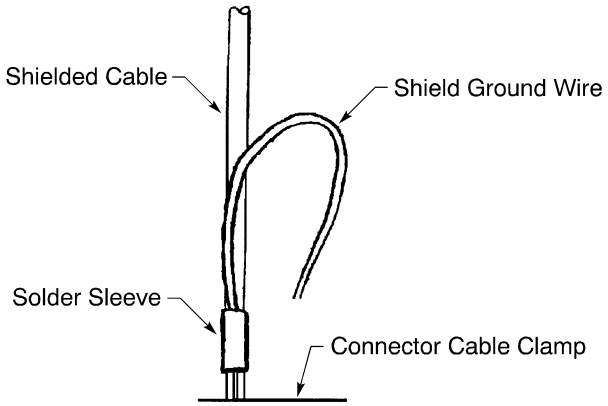

SHIELD GROUND WIRE CONFIGURATION FOR MICRODOT 202-3836-000 CABLE
Figure 34

(4) Assemble a contact on the end of the wire:

(a) Make a selection of a size 22 contact from Table 9.

(b) Make a selection of a crimp tool from Table 27.

(c) Remove 0.15 inch ±0.03 inch of insulation from the end of the wire.

(d) Crimp the wire in the crimp barrel of the contact.

E. Contact Assembly

Table 28
APPLICABLE CONDITIONS FOR THE ADJUSTMENT OF THE SIZE OF THE CONDUCTOR

Applicable Conditions		Adjustment of the Conductor Size
Wire Size (AWG)	Crimp Barrel Size	
26	20	AWG 26 filler wire
24	16	Eyelet
22	16	Eyelet

For training purposes only!

BOEING PROPRIETARY - Copyright © Unpublished Work - See title page for details

CINCH ACIS CONNECTORS, RAYCHEM (TYCO) MTC100, MTCPQ, AND MTCTQ CONNECTORS

Table 29
CONTACT CRIMP TOOLS

Wire Size (AWG)	Crimp Barrel Size	Contact Type	Crimp Tool			
			Basic Unit		Locator	
			Part Number	Setting	Part Number	Color
24	20	Pin	AFM-10	3	K817-11BE	-
			GWT-202-2204-CTA-165-166	-	-	-
			GWT-202R-2204R-CTA-165-166	-	-	-
			M22520/2-01	4	K817-11	-
			WA22	4	K817-11	-
			WA22BESS	3	K817-11BE	-
		Socket	AFM-10	3	K818-11BE	-
			GWT-202-2204-CTA-165-166	-	-	-
			GWT-202R-2204R-CTA-165-166	-	-	-
			M22520/2-01	4	K818-11	-
			WA22	4	K818-11	-
			WA22BESS	3	K818-11BE	-
22	20	Pin	AFM-10	5	K817-11BE	-
			GWT-202-2204-CTA-165-166	-	-	-
			GWT-202R-2204R-CTA-165-166	-	-	-
			M22520/2-01	5	K817-11	-
			WA22	5	K817-11	-
			WA22BESS	4	K817-11BE	-
		Socket	AFM-10	4	K818-11BE	-
			GWT-202-2204-CTA-165-166	-	-	-
			GWT-202R-2204R-CTA-165-166	-	-	-
			M22520/2-01	5	K818-11	-
			WA22	5	K818-11	-
			WA22BESS	4	K818-11BE	-

For training purposes only!

BOEING PROPRIETARY - Copyright © Unpublished Work - See title page for details

Table 29 (continued)

Wire Size (AWG)	Crimp Barrel Size	Contact Type	Crimp Tool			
			Basic Unit		Locator	
			Part Number	Setting	Part Number	Color
20	20	Pin	AFM-10	5	K817-11BE	-
			GWT-202-2204-CTA-165-166	-	-	-
			GWT-202R-2204R-CTA-165-166	-	-	-
			M22520/2-01	6	K817-11	-
			WA22	6	K817-11	-
			WA22BESS	5	K817-11BE	-
		Socket	AFM-10	5	K818-11BE	-
			GWT-202-2204-CTA-165-166	-	-	-
			GWT-202R-2204R-CTA-165-166	-	-	-
			M22520/2-01	6	K818-11	-
			WA22	6	K818-11	-
			WA22BESS	5	K818-11BE	-
	16	Pin	M22520/1-01	4	M22520/1-04	Blue
			WA27F	4	M22520/1-04	Blue
		Socket	M22520/1-01	4	M22520/1-04	Blue
			WA27F	4	M22520/1-04	Blue
18	16	Pin	M22520/1-01	5	M22520/1-04	Blue
			WA27F	5	M22520/1-04	Blue
		Socket	M22520/1-01	5	M22520/1-04	Blue
			WA27F	5	M22520/1-04	Blue
16	16	Pin	M22520/1-01	6	M22520/1-04	Blue
			WA27F	6	M22520/1-04	Blue
		Socket	M22520/1-01	6	M22520/1-04	Blue
			WA27F	6	M22520/1-04	Blue

(1) Find the applicable conditions for the adjustment of the conductor size in Table 28.

(2) If a filler wire is specified, assemble the contact with a filler wire. Refer to Paragraph 5.F.

(3) If an eyelet is specified, assemble the contact with an eyelet. Refer to Paragraph 5.G.

(4) Make a selection of a crimp tool from Table 29.

(5) Put the end of the wire in the crimp barrel of the contact. Refer to Figure 35.

For training purposes only

BOEING PROPRIETARY - Copyright © Unpublished Work - See title page for details

Make sure that:

- All of the strands of the conductor are in the crimp barrel
- The conductor can be seen in the inspection hole
- The distance from the end of the insulation to the shoulder of the contact is not more than 0.03 inch.

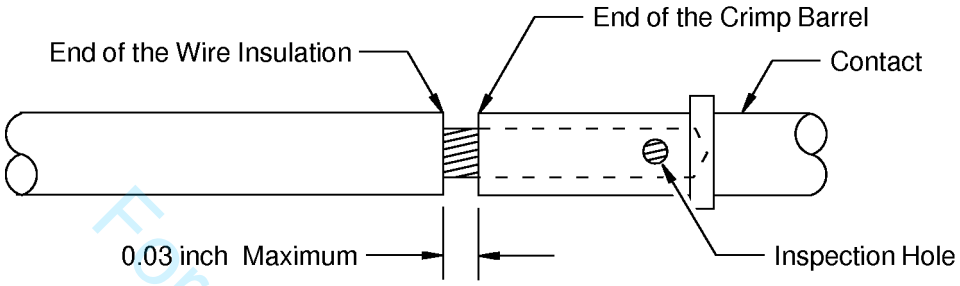

POSITION OF THE WIRE IN THE CRIMP BARREL
Figure 35

(6) Crimp the contact.

F. Contact Assembly with Filler Wire

For the conditions that are applicable for this procedure, refer to Paragraph 5.E.

Table 30
SIZE OF THE FILLER WIRE

Wire Size (AWG)	Crimp Barrel Size	Filler Wire	
		Quantity	Size (AWG)
26	20	1	26

Table 31
CONTACT CRIMP TOOLS

Wire Size (AWG)	Crimp Barrel Size	Crimp Tool			
		Basic Unit		Locator	
		Part Number	Setting	Part Number	Color
26	20	M22520/2-01	4	K818-11	-
		WA22	4	K818-11	-

(1) Make a selection of a crimp tool from Table 31.

(2) Find the quantity and the size of the filler wire in Table 30.
Make sure that the filler wire is the same wire type as the primary wire.

(3) Prepare the end of the filler wire. Refer to Paragraph 5.A.

(4) Put the end of each wire in the crimp barrel of the contact. Refer to Figure 36.

For training purposes only!

BOEING PROPRIETARY - Copyright © Unpublished Work - See title page for details

Make sure that:

- All of the strands of each conductor are in the crimp barrel
- The conductors can be seen in the inspection hole
- The distance from the end of the insulation to the shoulder of the contact is not more than 0.03 inch.

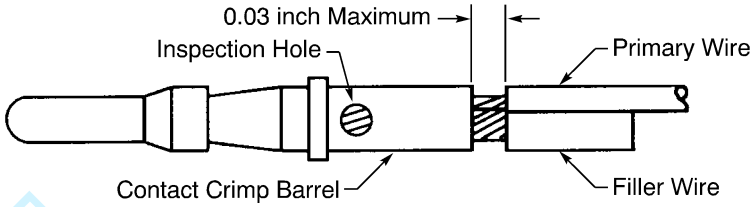

POSITION OF THE PRIMARY WIRE AND THE FILLER WIRE IN THE CRIMP BARREL
Figure 36

(5) Crimp the contact.

Make sure that:

- All of the strands of each conductor are in the crimp barrel
- The conductors can be seen in the inspection hole
- The distance from the end of the insulation to the shoulder of the contact is not more than 0.03 inch.

(6) Remove the unwanted length of the filler wire as close as possible to the end of the crimp barrel. Refer to Figure 37.

CAUTION: DO NOT CUT OR CAUSE DAMAGE TO THE STRANDS OF THE PRIMARY WIRE. THE MECHANICAL STRENGTH OF THE WIRE CAN BE DECREASED.

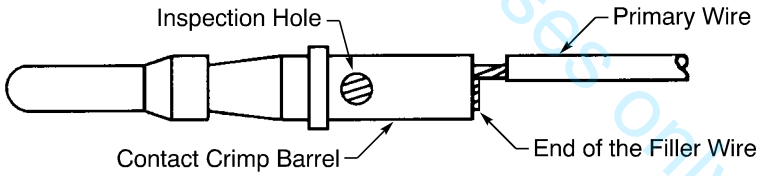

REMOVAL OF THE UNWANTED LENGTH OF THE FILLER WIRE
Figure 37

For training purposes only!

G. Contact Assembly with an Eyelet

For the conditions that are applicable for this procedure, refer to Paragraph 5.E.

Table 32
CONTACT CRIMP TOOLS

Wire Size (AWG)	Crimp Barrel Size	Crimp Tool			
		Basic Unit		Locator	
		Part Number	Setting	Part Number	Color
24	16	M22520/1-01	5	M22520/1-04	Blue

BOEING PROPRIETARY - Copyright © Unpublished Work - See title page for details

Table 32 (continued)

Wire Size (AWG)	Crimp Barrel Size	Crimp Tool			
		Basic Unit		Locator	
		Part Number	Setting	Part Number	Color
22	16	M22520/1-01	6	M22520/1-04	Blue

(1) Make a selection of a crimp tool from Table 32.

(2) Make as selection of an eyelet from Table 12.

(3) Put the eyelet in the crimp barrel of the contact.

Make sure that the shoulder of the eyelet is against the end of the crimp barrel.

(4) Put the end of the wire in the eyelet. Refer to Figure 38.

Make sure that:

- All of the strands of the conductor are in the crimp barrel
- The conductor can be seen in the inspection hole
- The distance from the end of the insulation to the shoulder of the eyelet is not more than 0.03 inch.

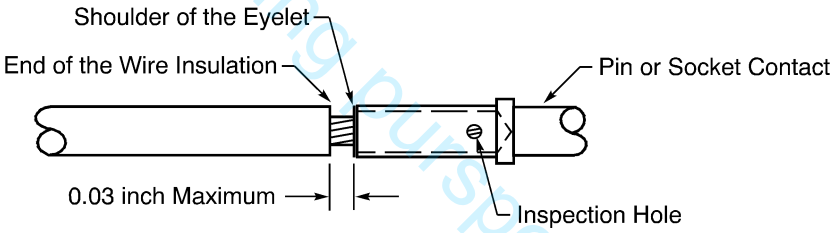

POSITION OF THE WIRE IN THE CRIMP BARREL
Figure 38

For training purposes only!

H. Contact Insertion

Table 33
CONTACT INSERTION TOOLS

Crimp Barrel Size	Insertion Tool		
	Part Number	Color	Description
20	ATBO-1062	-	Metal
	CTA-1160	Red	Plastic
	RIT22RC	-	Metal

BOEING PROPRIETARY - Copyright © Unpublished Work - See title page for details

Table 33 (continued)

Crimp Barrel Size	Insertion Tool		
	Part Number	Color	Description
16	M81969/8-07	Blue	Metal
	M81969/14-03	Blue	Metal
	MS27495A16	Blue	Metal
	11-8674-16	Blue	Metal
	11-8794-16	Blue	Metal
	RTM16-4	Blue	Metal
	ATBX1108	-	Metal
	MS27534-16	Blue	Plastic

(1) Make a selection of a contact insertion tool from Table 33.

CAUTION: DO NOT USE AN INSERTION TOOL THAT HAS:
- A BENT TIP
- A BENT BIT
- A FLARED TIP
- A BROKEN TIP
- A TIP WITH A CRACK.

WARNING: IF A DEFECTIVE INSERTION TOOL IS USED, INJURY TO THE OPERATOR CAN OCCUR.

CAUTION: A DEFECTIVE INSERTION TOOL CAN CAUSE:
- DAMAGE TO THE REAR GROMMET OF THE CONNECTOR
- DAMAGE TO THE CONTACT RETENTION CLIPS.

(2) Put the contact assembly in the insertion tool. Refer to Figure 39 and Figure 40.

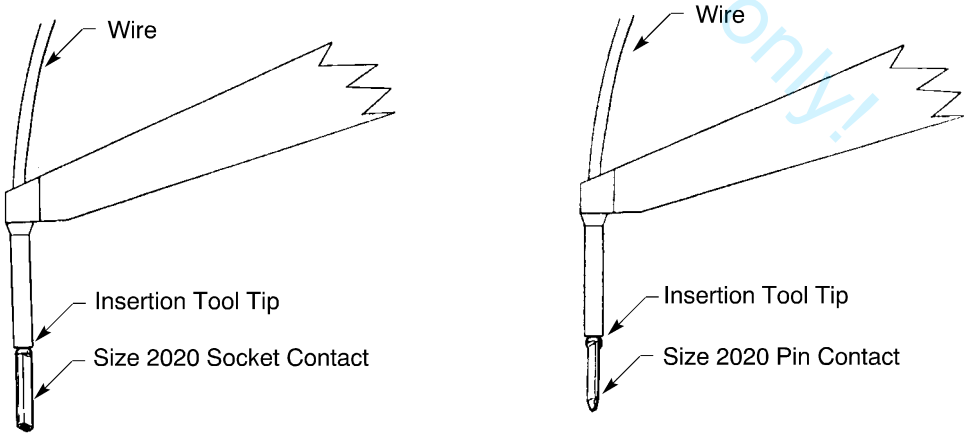

POSITION OF THE SIZE 2020 CONTACT IN THE INSERTION TOOL
Figure 39

For training purposes only!

BOEING PROPRIETARY - Copyright © Unpublished Work - See title page for details

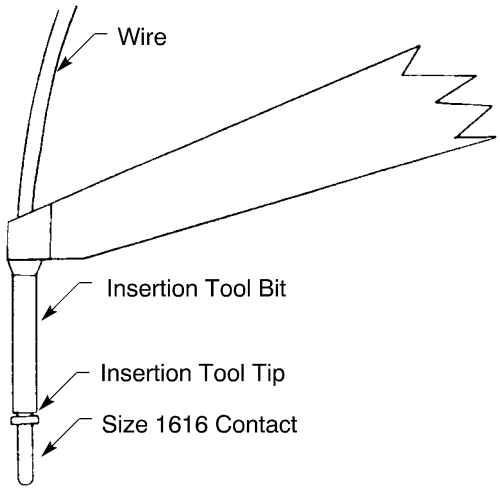

POSITION OF THE SIZE 1616 CONTACT IN THE INSERTION TOOL
Figure 40

(3) For a size 20 pin contact, align the flat surface of the contact with the longitudinal axis of the connector insert. Refer to Figure 41.

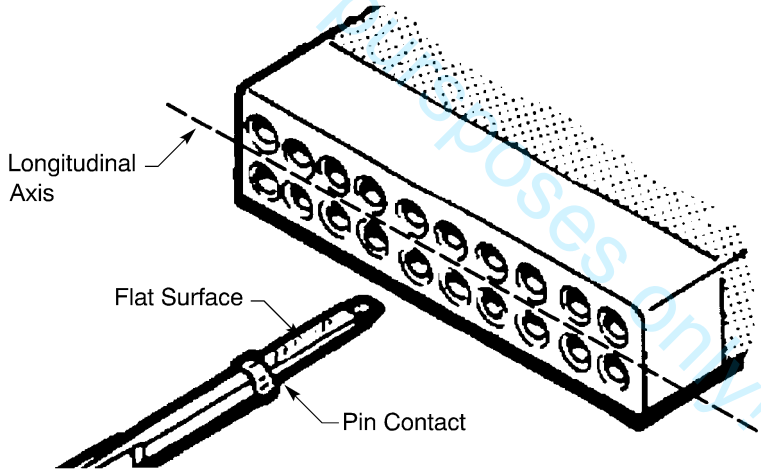

POSITION OF THE PIN CONTACT FOR INSERTION
Figure 41

(4) For a size 20 socket contact, align the flat surface of the contact with the perpendicular axis of the connector insert. Refer to Figure 42.

For training purposes only!

BOEING PROPRIETARY - Copyright © Unpublished Work - See title page for details

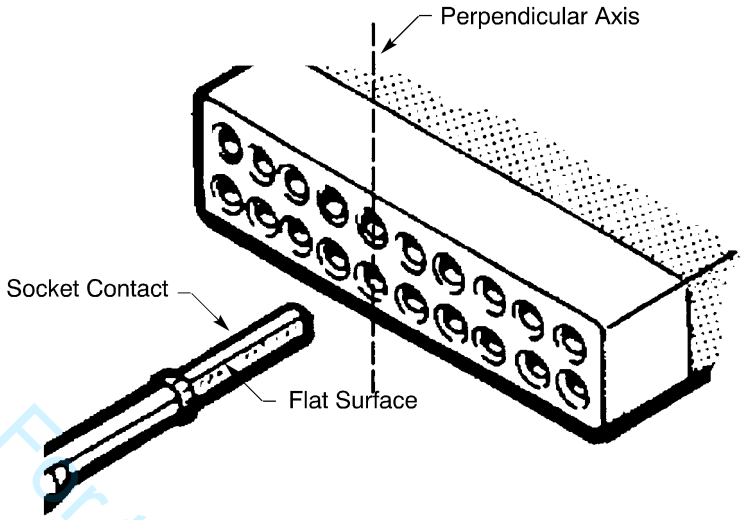

POSITION OF THE SOCKET CONTACT FOR INSERTION
Figure 42

(5) Push the tool and the contact into the contact cavity until the tool stops.

(6) Carefully remove the tool from the contact cavity.

(7) Lightly pull the wire to make sure that the contact is locked in the contact cavity.

CAUTION: DO NOT PULL THE WIRE WITH A STRONG OR A SUDDEN FORCE. THE FORCE CAN CAUSE DAMAGE TO THE CONNECTOR OR THE CONTACT.

CAUTION: DO NOT MAKE A DENT IN THE WIRE INSULATION WITH THE FINGERNAILS. DAMAGE TO THE WIRE INSULATION CAN CAUSE UNSATISFACTORY PERFORMANCE OF THE WIRE.

(8) If the contact is not locked in the contact cavity:

(a) Pull the contact from the contact cavity.

(b) Do Step (2) through Step (7) again.

I. Fiber Optic Terminus Insertion

NOTE: A contact terminus can be installed before or after the alignment sleeve insert is installed in the connector.

Refer to the procedures for Contact Terminus Insertion in Subject 20-12-21.

J. Seal of an Empty Contact Cavity and an Empty Terminus Cavity

An empty contact cavity or an empty terminus cavity must be sealed with a seal plug or a seal rod.

Refer to Subject 20-60-08.

K. Insert Installation - Size 1 Shell

NOTE: The insert that has fiber optic contact cavities can only be installed in the MTCTQ connector shells.

NOTE: The MTCTQ connector shell can only contain the insert that has fiber optic contact cavities.

BOEING PROPRIETARY - Copyright © Unpublished Work - See title page for details
For training purposes only!

Refer to Figure 43.

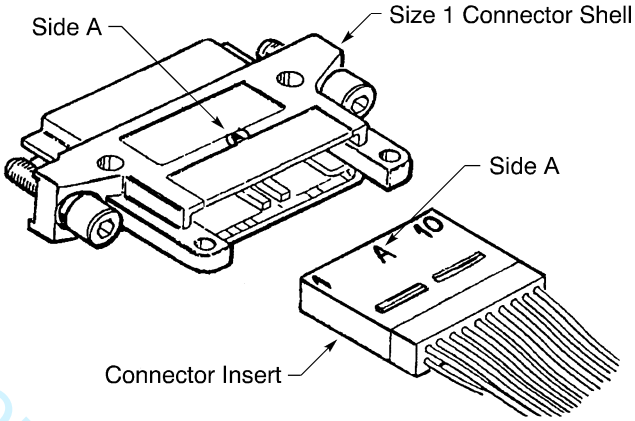

INSTALLATION OF A CONNECTOR INSERT IN A SIZE 1 SHELL
Figure 43

(1) Align Side A of the connector insert with Side A of the connector shell.
(2) Push the insert into the connector shell until it is locked in position.
(3) Pull lightly on the wires to make sure that the insert is locked in the shell.
(4) If the insert is not locked in the shell, do Step (2) and Step (3) again.

L. Insert Installation with Pin Contacts - Size 2 Shell

Refer to Figure 44.

For training purposes only!

BOEING PROPRIETARY - Copyright © Unpublished Work - See title page for details

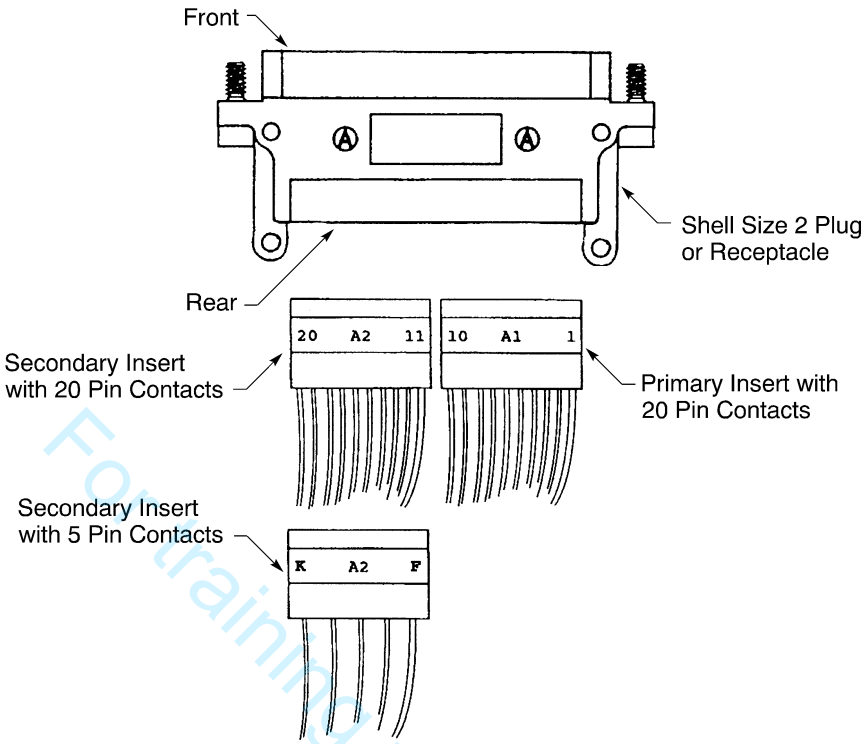

INSTALLATION OF CONNECTOR INSERTS WITH PIN CONTACTS IN A SIZE 2 SHELL
Figure 44

(1) Put the connector shell flat with Side A up.

(2) Put the primary 1-10 insert on the right side with Side A1 up.

(3) Put the secondary 11-20 or F-K insert on the left side with Side A2 up.

(4) At the same time, push each of the inserts into the connector shell until each insert is locked in position.

(5) Pull lightly on the wires to make sure that the each insert is locked in the shell.

(6) If the inserts are not locked in the shell, do Step (4) and Step (5) again.

M. Insert Installation with Socket Contacts - Size 2 Shell

Refer to Figure 45.

For training purposes only!

BOEING PROPRIETARY - Copyright © Unpublished Work - See title page for details

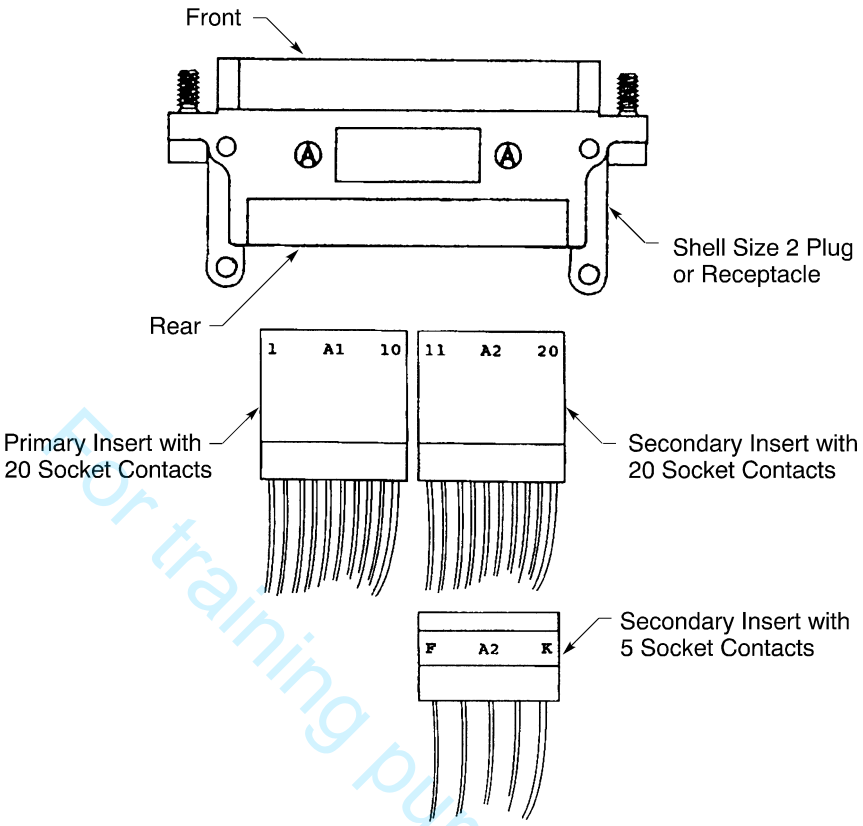

INSTALLATION OF CONNECTOR INSERTS WITH SOCKET CONTACTS IN A SIZE 2 SHELL
Figure 45

For training purposes only!

(1) Put the connector shell flat with Side A up.

(2) Put the primary 1-10 insert on the left side with Side A1 up.

(3) Put the secondary 11-20 or F-K insert on the right side with Side A2 up.

(4) At the same time, push each of the inserts into the connector shell until each insert is locked in position.

(5) Pull lightly on the wires to make sure that the each insert is locked in the shell.

(6) If the inserts are not locked in the shell, do Step (4) and Step (5) again.

N. Installation of a Cory Ground Block

For the installation of a Raychem ground block, refer to Paragraph 5.O.

Table 34
NECESSARY MATERIALS

Description	Part Number	Supplier
Thread Lock Compound	Loctite 222	Loctite
	Loctite 271	Loctite

Refer to Figure 10.

BOEING PROPRIETARY - Copyright © Unpublished Work - See title page for details

(1) Make a selection of a Cory ground block from Table 9.
(2) Make a selection of a screw from Table 8.
(3) If the connector is a plug:
  (a) Make a selection of a ground spring from Table 8.
  (b) Put the ground spring on the connector shell.
(4) Put the connector flat with Side A up.
(5) Align each hole of the ground block with the applicable hole in the shell.
(6) If the screw is not a self-lock screw:
  (a) Make a selection of a thread lock compound from Table 34.
  (b) Put one drop of thread lock compound on the threads of each screw.
(7) Install each screw.

O. Installation of a Raychem Ground Block

For the installation of a Cory ground block, refer to Paragraph 5.N.

Refer to Figure 10.

(1) Make a selection of a Raychem ground block from Table 9.
(2) Put the connector flat with Side A up.
(3) Align each hole of the ground block with the applicable hole in the shell.
(4) Install each screw.

P. Contact Insertion in the Ground Block

Table 35
GROUND BLOCK CONTACT INSERTION TOOLS

Crimp Barrel Size	Insertion Tool		
	Part Number	Color	Description
22	M81969/14-01	Green	Plastic

(1) Make a selection of a contact insertion tool from Table 35.
(2) Put the contact assembly in the insertion tool.
(3) Align the contact with the contact cavity.
(4) Push the tool and the contact straight into the contact cavity until the tool stops.
(5) Carefully remove the tool from the contact cavity.
(6) Lightly pull the wire to make sure that the contact is locked in the contact cavity.

CAUTION: DO NOT PULL THE WIRE WITH A STRONG OR A SUDDEN FORCE. THE FORCE CAN CAUSE DAMAGE TO THE GROUND BLOCK OR THE CONTACT.

CAUTION: DO NOT MAKE A DENT IN THE WIRE INSULATION WITH THE FINGERNAILS. DAMAGE TO THE WIRE INSULATION CAN CAUSE UNSATISFACTORY PERFORMANCE OF THE WIRE.

(7) If the contact is not locked in the contact cavity:
  (a) Pull the contact from the contact cavity.

For training purposes only!

BOEING PROPRIETARY - Copyright © Unpublished Work - See title page for details

(b) Do Step (2) through Step (6) again.

Q. Strain Relief Assembly

Table 36
NECESSARY PARTS AND MATERIALS

Description	Part Number	Supplier
Clamp Filler	10-62034	QPL
Thread Lock Compound	Loctite 222	Loctite
	Loctite 271	Loctite
Washer	NAS1149DN332J	QPL

These conditions are applicable:

- A maximum of six terminal lugs can be attached to one connector shell
- A maximum of three terminal lugs can be attached to one ear of the connector shell.

(1) Align the holes of each cable clamp bar with the holes in the ears of the connector shell.

(2) If a shield ground wire has a terminal lug:

(a) Put an equal quantity of terminal lugs between the clamp bars against each ear of the shell.

NOTE: If the length of the shield ground wire is not sufficient to be attached to an ear to keep the quantity equal, the terminal lugs can be attached to the same ear.

Refer to:

- Figure 46 for alternative positions of one terminal lug
- Figure 47 and Figure 48 for alternative positions of two terminal lugs
- Figure 49 for alternative positions of three terminal lugs.

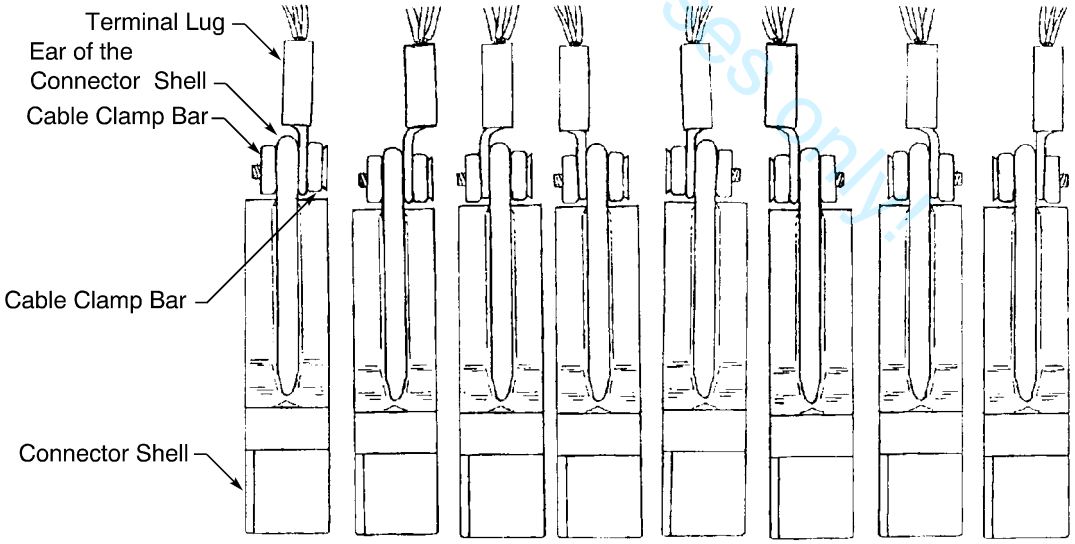

ALTERNATIVE POSITIONS FOR ONE TERMINAL LUG
Figure 46

For training purposes only!

BOEING PROPRIETARY - Copyright © Unpublished Work - See title page for details

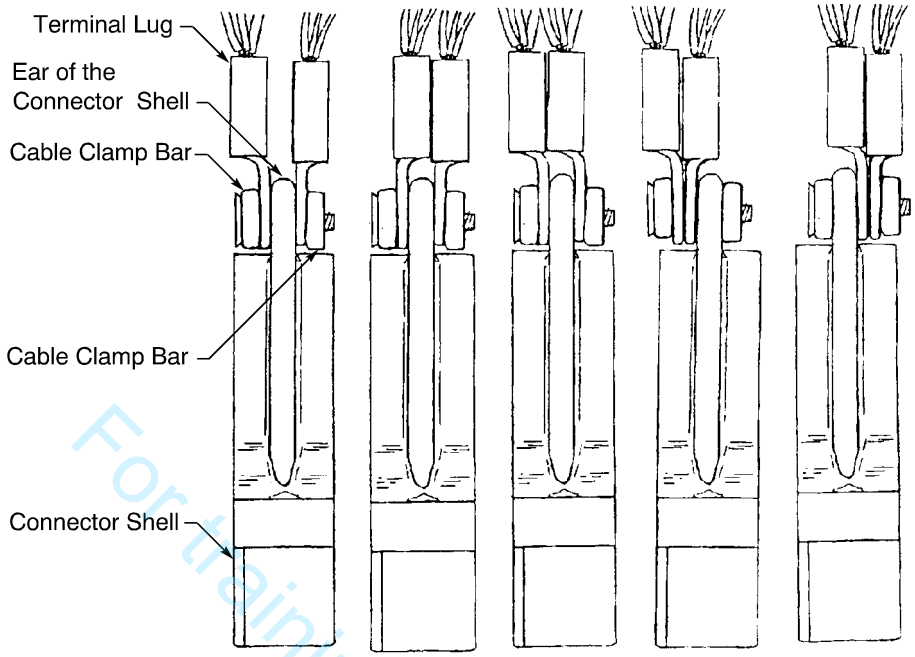

ALTERNATIVE POSITIONS FOR TWO TERMINAL LUGS
Figure 47

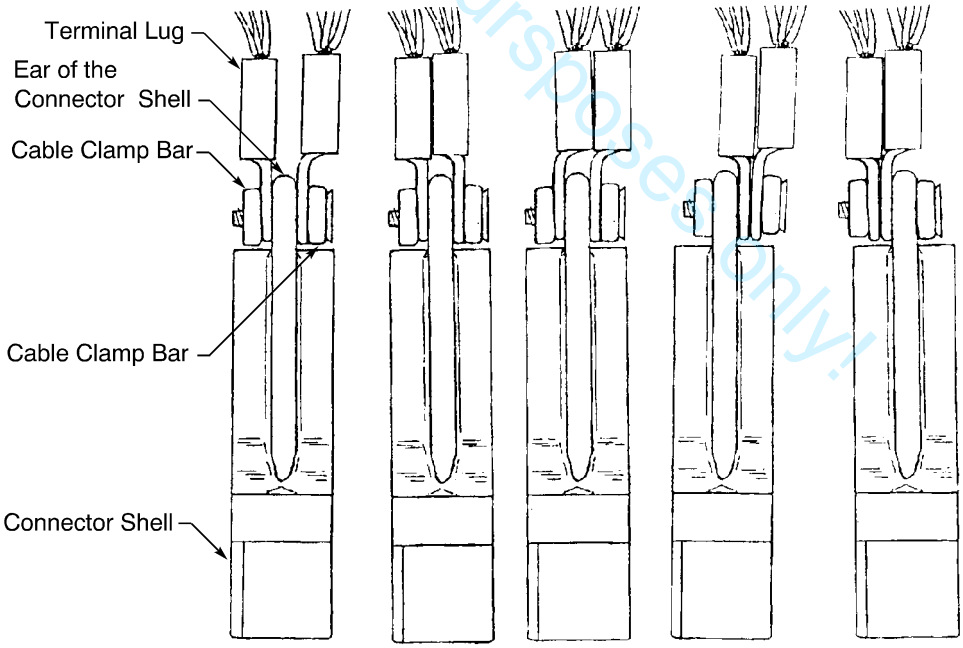

ALTERNATIVE POSITIONS FOR TWO TERMINAL LUGS
Figure 48

For training purposes only!

BOEING PROPRIETARY - Copyright © Unpublished Work - See title page for details

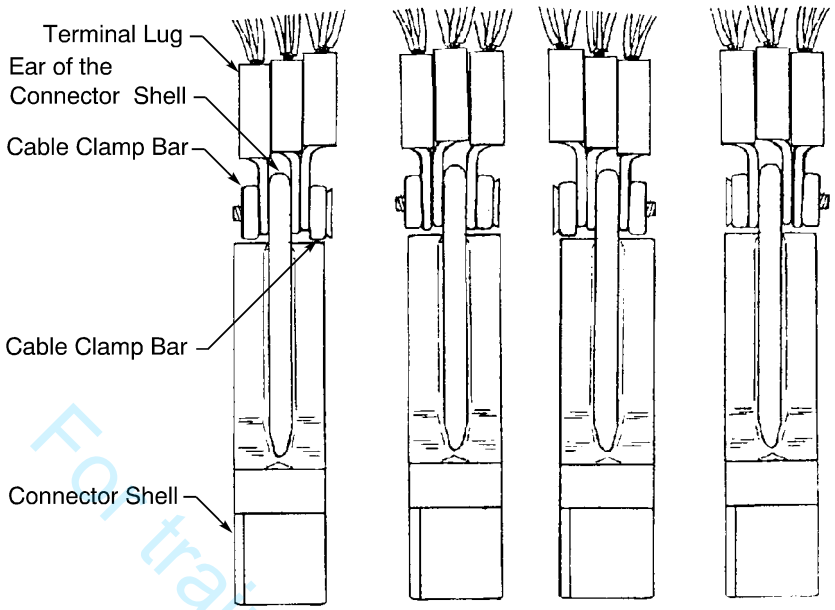

ALTERNATIVE POSITIONS FOR THREE TERMINAL LUGS
Figure 49

(b) Align the hole of each terminal lug with the hole in the ear of the shell.

(c) If the clamp bars are not parallel, put the necessary number of washers below the clamp bar at the ear where the distance between the clamp bars is smaller.

Refer to:

- Table 36 for the washers
- Table 37 for the configuration of terminal lugs and washers.

Table 37
CONFIGURATION OF TERMINAL LUGS, WASHERS AND FILLER TAPE

Total Number of Terminal Lugs	Number of Terminal Lugs on One Ear	Number of Terminal Lugs on the Other Ear	Number of Washers on the Other Ear	Number of Strips of Filler Tape
1	1	0	0	1
2	1	1	0	1
	2	0	1	1
3	2	1	0	1
	3	0	2	2
4	2	2	0	1
	3	1	1	2
5	3	2	0	2
6	3	3	0	2

(d) Put the necessary quantity of strips of filler tape on the cushion of the clamp bars.

For training purposes only!

BOEING PROPRIETARY - Copyright © Unpublished Work - See title page for details

Make sure that:

- The groove in the filler tape is against the cushion of the clamp bar
- The wires do not make an overlap.

Refer to:

- Table 36 for the filler tape
- Table 37 for the necessary quantity of strips of filler tape
- Table 38 for the length of the strips of filler tape
- Figure 50 for a cable clamp with one strip of filler tape
- Figure 51 for a cable clamp with two strips of filler tape.

Table 38
LENGTH OF SILICONE FILLER TAPE

Shell Size (inch)	Length (inch)	
	Target	Tolerance
1	1.0	±0.1
2	2.0	±0.1

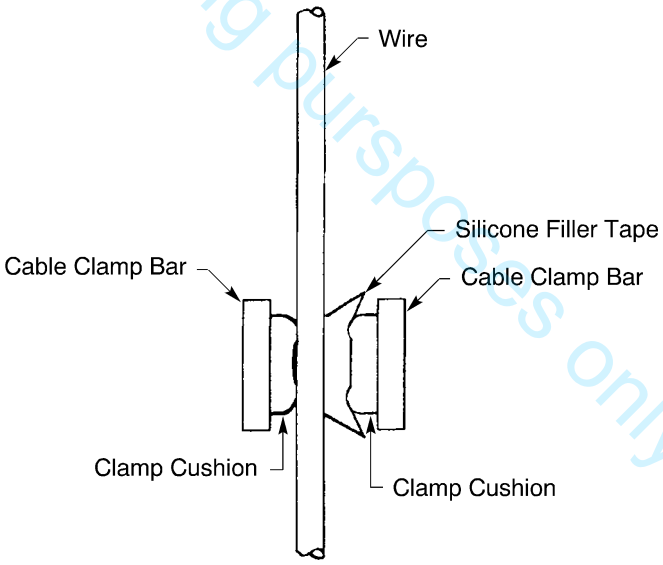

CABLE CLAMP WITH ONE STRIP OF FILLER TAPE
Figure 50

For training purposes only!

BOEING PROPRIETARY - Copyright © Unpublished Work - See title page for details

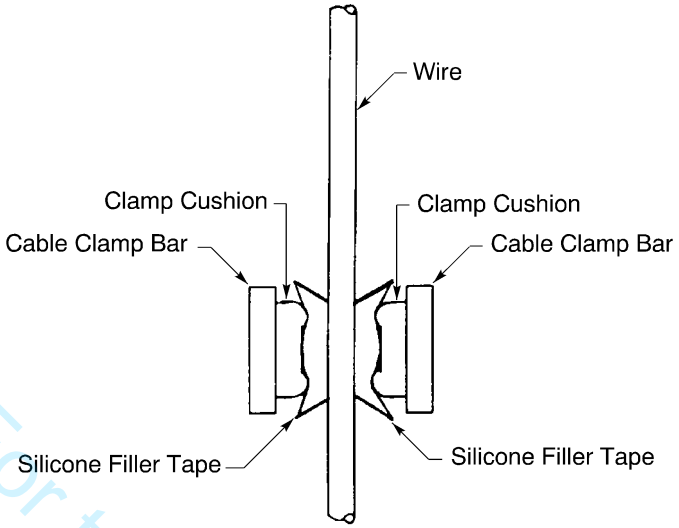

CABLE CLAMP WITH TWO STRIPS OF FILLER TAPE
Figure 51

(3) Make a selection of an installation screw from Table 6.

NOTE: 2 screws are necessary.

(4) For a NAS514P440-()P screw:

(a) Make a selection of a thread lock compound from Table 36.

(b) Put one drop of thread lock compound on the threads of the screw.

(5) If the shield ground wire has a terminal lug:

(a) Examine each ear of the connector shell.

Make sure that a terminal lug is not installed between the head of the screw and the clamp bar.

(b) Align each ground wire to make the longitudinal axis of the terminal lug point to the wires and away from the sides of the connector shell. Refer to Figure 52.

NOTE: If the terminal lugs are pointed to the side of a connector, it is not possible to tighten the jack screw when the plug and the receptacle are engaged.

For training purposes only!

BOEING PROPRIETARY - Copyright © Unpublished Work - See title page for details

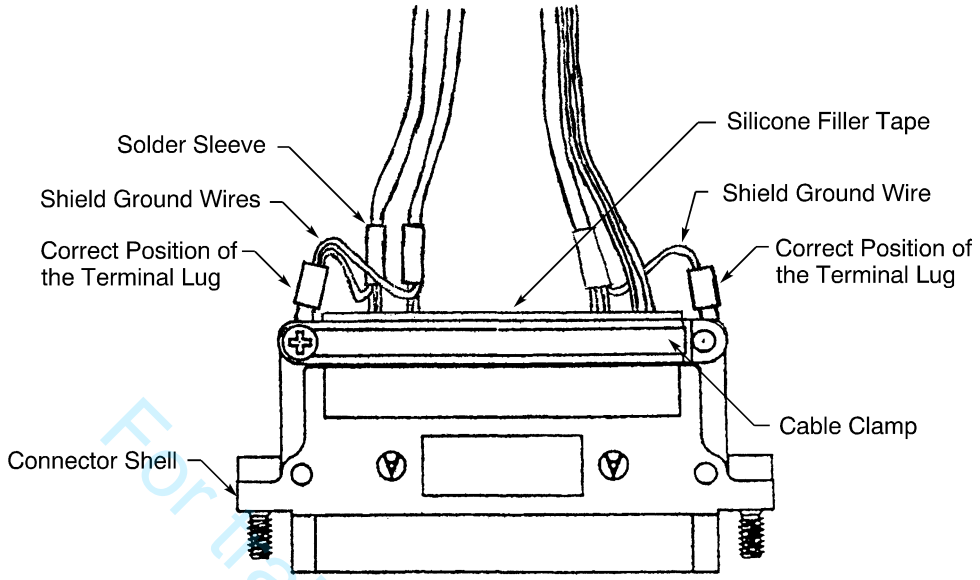

POSITION OF SHIELD GROUND WIRE TERMINAL LUGS
Figure 52

(6) Install each screw.

Make sure that:

- The wires between the cushions of the clamp bars do not make an overlap
- The end of each screw extends through the clamp bar a minimum of one and a half threads
- The distance from the edge of the cable clamp to the end of the screw head is a maximum of 0.04 inch.

(7) Torque each screw 8.5 ±0.5 inch-pounds.

6. CONNECTOR POLARIZATION AND THE CONNECTOR PART NUMBER

A. Connector Polarization and the Connector Part Number

NOTE: The polarization code in the connector part number identifies the polarization position of the key posts.

(1) Find the polarization code in the connector part number from the equipment list.

(2) For that code, find the correct connector polarization for the key posts. Refer to Figure 53.

(3) If the polarization position of the key posts on the connector do not agree with the polarization code, put the key posts in the correct position.

Refer to Paragraph 6.C.

(4) If the polarization code in the part number on the connector does not agree with the polarization positions, change the part number on the connector.

Refer to Paragraph 6.D.

For training purposes only!

BOEING PROPRIETARY - Copyright © Unpublished Work - See title page for details

B. Polarization Key Post Positions

The dark area shows the top of the key post

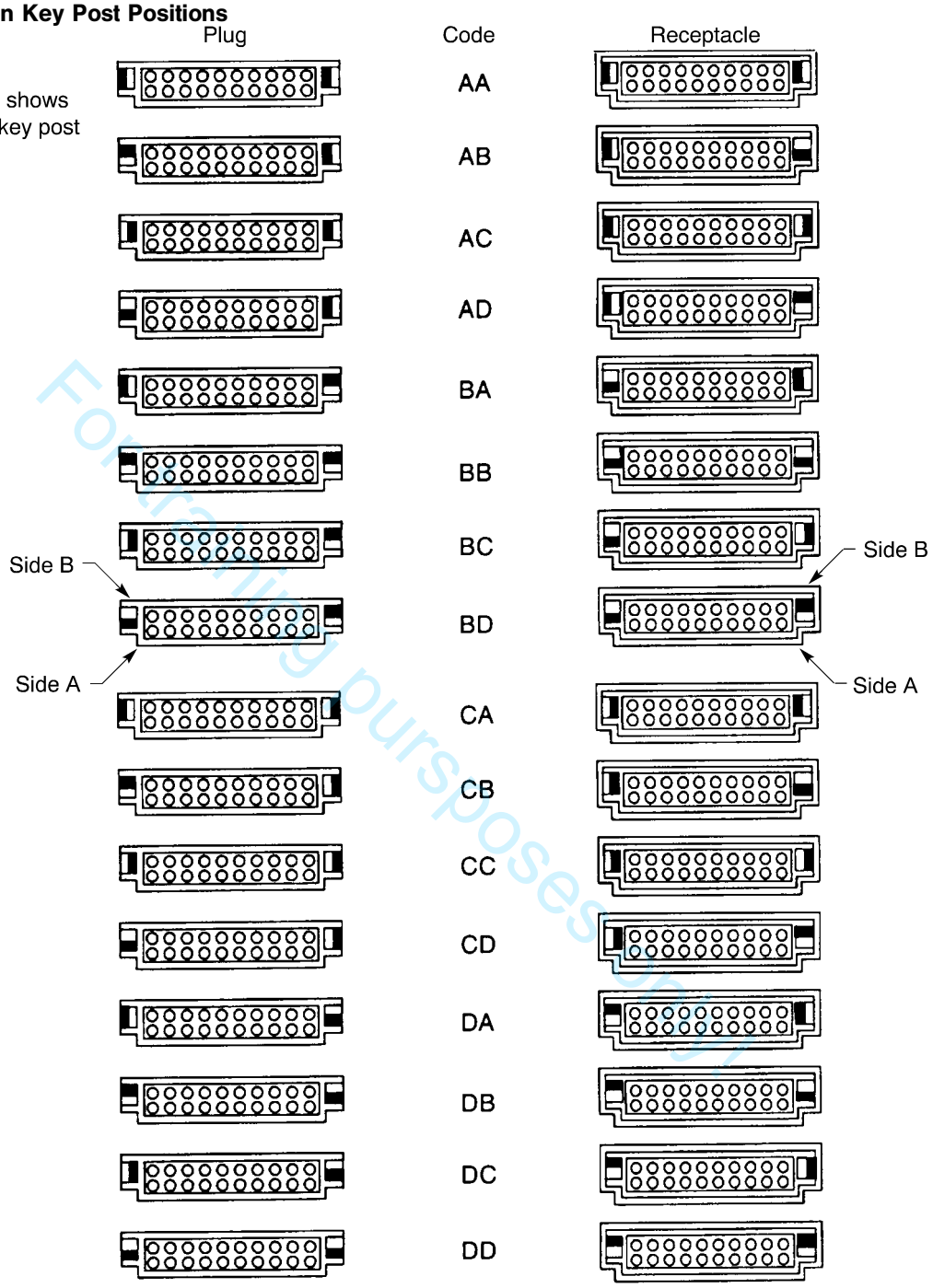

KEY POST POSITIONS
Figure 53

For training purposes only

BOEING PROPRIETARY - Copyright © Unpublished Work - See title page for details

C. Change of the Polarization Key Posts

If the position of the key posts on a connector are changed, the polarization code in the connector part number must be changed. Refer to Paragraph 6.D.

(1) Identify the polarization code in the connector part number from the equipment list.

(2) For that code, find the correct key post positions. Refer to Figure 53.

(3) Remove the incorrect polarization key post. Refer to Figure 54.

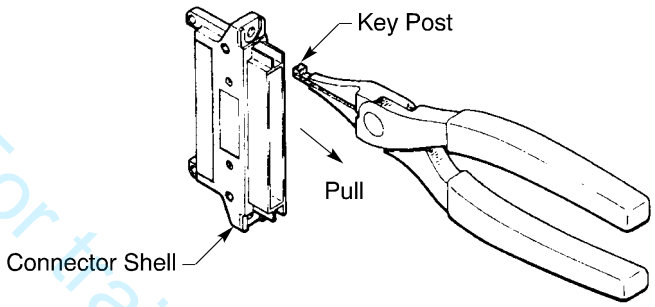

KEY POST REMOVAL
Figure 54

(a) Make a selection of a pair of long needle nose pliers that has smooth surfaces and no sharp edges.

CAUTION: A NEEDLE NOSE PLIERS WITH A ROUGH SURFACE OR A SHARP EDGE CAN CAUSE DAMAGE TO THE KEY POST.

(b) Hold the top of the key post tightly in the jaws of the pliers.

(c) Pull the pliers straight back from the face of the connector.

(4) Align the key post in the correct position with the key post slot in the connector shell. Refer to Figure 55.

For training purposes only!

BOEING PROPRIETARY - Copyright © Unpublished Work - See title page for details

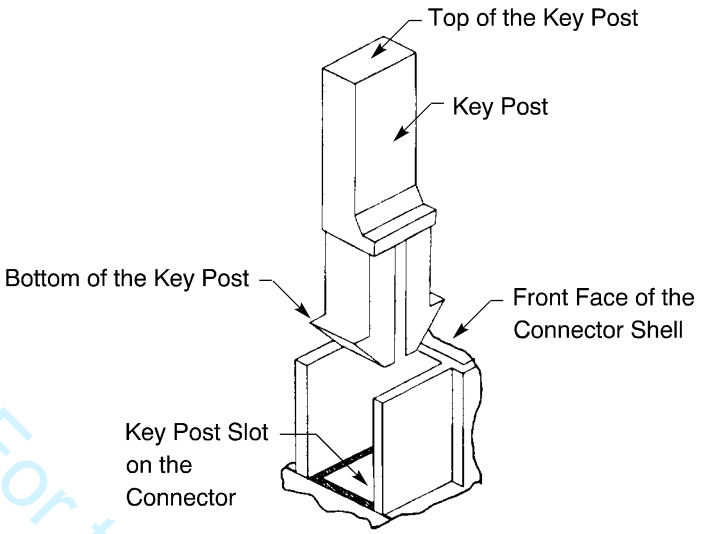

ALIGNMENT OF THE KEY POST AND THE KEY POST SLOT
Figure 55

(5) Push the key post into the slot.
Make sure that the key post is in the correct position.

(6) Do Step (3) through Step (5) again for the second key post.
Make sure that the key post is in the correct position.

D. Change of the Polarization Code, Any Part of the Connector Part Number, or the Complete Part Number, on the Connector Shell

Table 39
NECESSARY MATERIALS

Material	Part Number	Supplier
Ink	No. 68 Fast Dry	Independent
	No. 73X NW Opaque	Independent
	No. 73X Opaque	Independent
Paint, Clear	683-3-2	Akzo
	Clear Lacquer	Tartan
	EC-776	3M
	EC-776SR	3M
Pen	Permanent Ink Pen, Ultra Fine Point	Sanford Sharpie

(1) Make a selection of these necessary materials from Table 39:
- An ink or a permanent ink pen
- A clear paint.

(2) If the connector does not have a part number or a polarization code, write the part number and polarization code in the correct position on the connector shell.

BOEING PROPRIETARY - Copyright © Unpublished Work - See title page for details
For training purposes only!

Refer to the details of the applicable connector part number:

- Figure 4 for the Cinch ACIS series
- Figure 5 for the Raychem MTC100 series
- Figure 6 for the Raychem MTCPQ series.

(3) If the connector part number or polarization code is incorrect:

(a) Apply a layer of ink on the incorrect part number or polarization code on the connector shell. Make sure that the incorrect part number and polarization code cannot be read.

(b) Write the new part number or polarization code on the connector shell:

- Adjacent to the location of the incorrect part number and polarization code
- In the correct position on the connector shell.

Refer to the details of the applicable connector part number:

- Figure 4 for the Cinch ACIS series
- Figure 5 for the Raychem MTC100 series
- Figure 6 for the Raychem MTCPQ series.

(4) Let the ink dry for a minimum of 10 minutes.

(5) Apply a layer of clear paint on the part number and polarization code on the connector shell.

CAUTION: DO NOT APPLY PAINT ON THE CONTACTS. PAINT ON THE SURFACE OF A CONTACT CAN CAUSE UNSATISFACTORY ELECTRICAL PERFORMANCE OF THE CONTACT.

(6) Let the paint dry before the connector shell is touched or moved.

7. CONNECTOR INSTALLATION

A. Installation of the ACIS or MTC100 Receptacle in a Panel

Table 40
INSTALLATION PANEL WASHERS

Panel Thickness (inch)		Necessary Panel Washers
Minimum	Maximum	
0.073	0.103	0
0.042	0.072	1
0.011	0.041	2

For training purposes only!

BOEING PROPRIETARY - Copyright © Unpublished Work - See title page for details

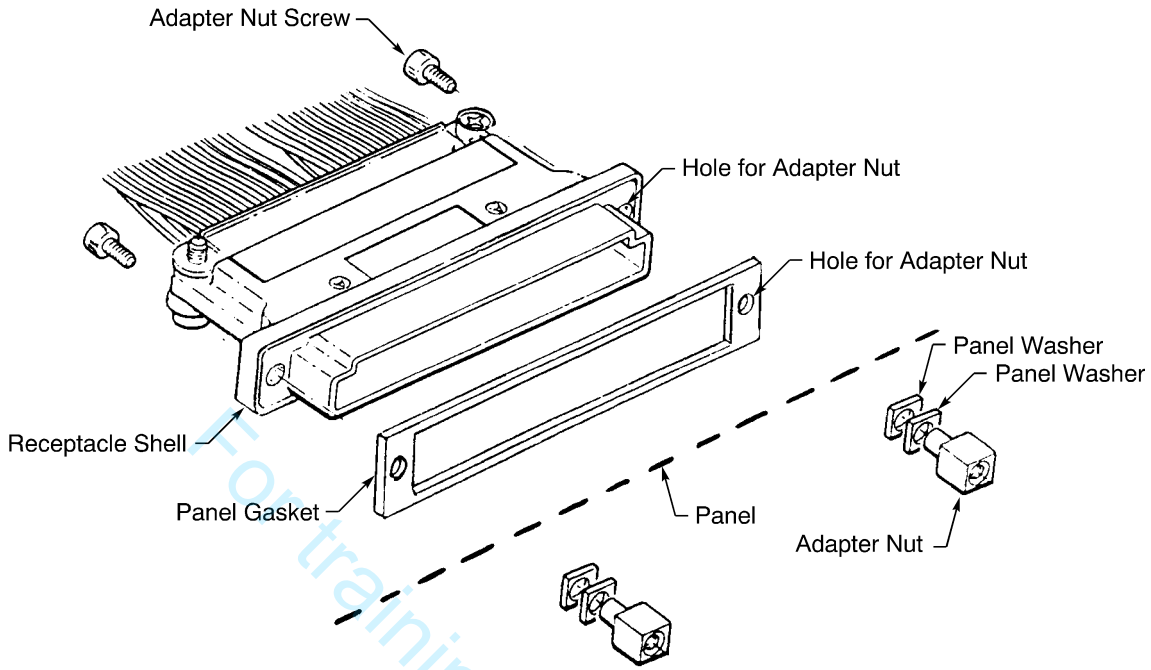

RECEPTACLE INSTALLATION IN A PANEL
Figure 56

(1) For installation with a panel gasket, put the panel gasket on the engaging end of the receptacle. Refer to Figure 56.

(2) For installation without a panel gasket:

(a) Measure the thickness of the panel.

(b) Find the number of panel washers that are necessary for each adapter nut. Refer to Table 40.

(c) Put the necessary quantity of washers on each adapter nut.

(3) From the back of the panel, push the receptacle into the connector slot in the panel.

(4) From the front of the panel, put the adapter nuts and the necessary panel washers in the end of the connector slot in the panel and into the adapter nut hole in the end of the receptacle shell.

(5) From the back of the panel, put an adapter nut screw on the end of each adapter nut.

(6) Tighten the each screw with one of these tools:

- A 7/64 inch hex-head driver
- A 7/64 inch allen wrench.

Make sure that the front surface of the adapter nuts is at the same level as the front surface of the receptacle.

(7) Torque the screws 13.5 ±1.5 inch-pounds.

For training purposes only!

BOEING PROPRIETARY - Copyright © Unpublished Work - See title page for details

B. Installation of the MTCPQ or MTCTQ Receptacle in a Panel

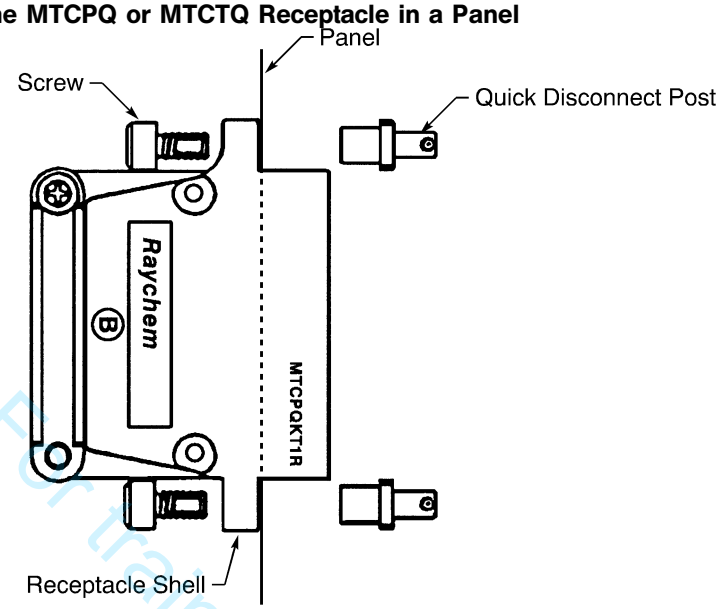

INSTALLATION OF THE RECEPTACLE
Figure 57

(1) Align the receptacle installation holes with the holes in the panel. Refer to Figure 57.

Make sure that:

- If the receptacle is installed horizontally, Side A is on top
- If the receptacle is installed vertically, contact cavity 1 is on top.

(2) Engage the threads of the screws and the quick disconnect post.

(3) Torque the screw 20.0 inch-pounds ±2.0 inch-pounds.

C. Plug and Receptacle Connection

Before mating a plug and a receptacle that have fiber optic termini, inspect and, if necessary, clean the fiber optic termini. Refer to Subject 20-12-20.

Table 41
CONNECTOR INSTALLATION TOOLS

Driver				Calibration (inch-pound)	
Handle		Tip		Target	Tolerance
Part Number	Supplier	Part Number	Supplier		
CE-1603400	Raychem	CE-1603600	Raychem	-	-
TS-35	UTICA	7/64 Hex	Any Source	9.0	±1.0

For training purposes only!

BOEING PROPRIETARY - Copyright © Unpublished Work - See title page for details

CINCH ACIS CONNECTORS, RAYCHEM (TYCO) MTC100, MTCPQ, AND MTCTQ CONNECTORS

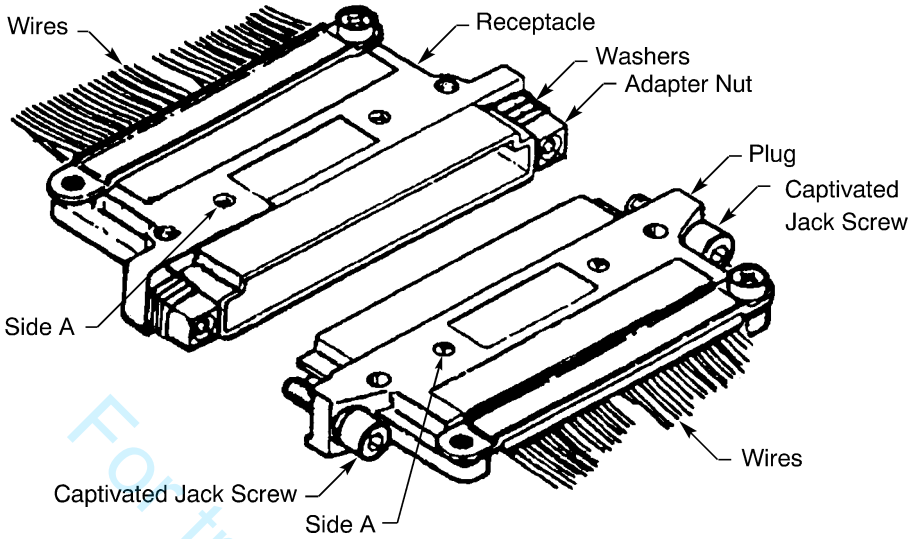

CONNECTION OF THE ASIC OR MTC100 PLUG AND RECEPTACLE
Figure 58

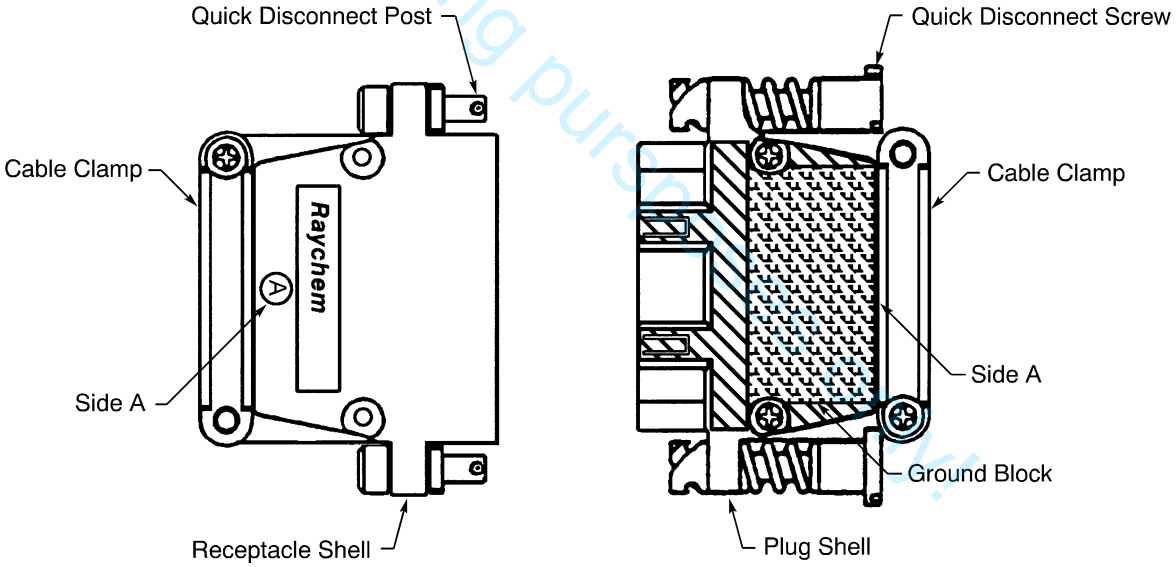

CONNECTION OF THE MTCPQ PLUG AND RECEPTACLE
Figure 59

(1) To connect an ACIS or a MTC100 plug and an inline receptacle:

I (a) Make a selection of a connection tool from Table 41.

(b) Put three washers on each adapter nut of the receptacle.

(c) Put the adapter nuts in the mounting holes of the receptacle.

For training purposes only.

BOEING PROPRIETARY - Copyright © Unpublished Work - See title page for details

(d) Tighten the adapter nut screws with one of these tools:
- A 7/64 inch hex-head driver
- A 7/64 inch allen wrench.

Make sure that the front surface of the adapter nut is level with the front surface of the receptacle.

(e) Align the front face of the plug with the front face of the receptacle. Refer to Figure 58.

Make sure that:
- Side A of the plug is on the same side as the Side A of the receptacle
- The key posts in the plug and the receptacle are in the correct positions.

(f) Push the plug into the receptacle.

(g) Turn each captivated jack screw two turns in the clockwise direction.

(h) Turn each screw again until the screw does not turn.

(2) To connect an ACIS or MTC100 plug and a receptacle that is installed in a panel:

(a) Make a selection of a connection tool from Table 41.

(b) Align the front face of the plug with the front face of the receptacle. Refer to Figure 58.

Make sure that:
- Side A of the plug is on the same side as the Side A of the receptacle
- The key posts in the plug and the receptacle are in the correct positions.

(c) Push the plug into the receptacle.

(d) Turn each captivated jack screw two turns in the clockwise direction.

(e) Turn each screw again until the screw does not turn.

(3) To connect a MTCPQ or MTCTQ plug and a receptacle:

(a) Make a selection of one of these tools:
- A 7/64 inch hex-head driver with or without a ball type end
- A 7/64 inch allen wrench with or without a ball type end
- A screwdriver.

(b) Align the front face of the plug with the front face of the receptacle. Refer to Figure 59.

Make sure that:
- Side A of the plug is on the same side as the Side A of the receptacle
- The key posts in the plug and the receptacle are in the correct positions.

(c) Push the plug into the receptacle.

(d) Put the tool on the head of one of the quick disconnect screws.

(e) At the same time, push the tool and turn the screw 1/4 turn in the clockwise direction.

(f) Put the tool on the head of the other quick disconnect screw.

(g) At the same time, push the tool and turn the screw 1/4 turn in the clockwise direction.

(h) Turn each screw again until the screw does not turn.

For training purposes only

BOEING PROPRIETARY - Copyright © Unpublished Work - See title page for details

8. APPROVED TOOL SUPPLIERS

A. Insert Removal Tools

Table 42
INSERT REMOVAL TOOL SUPPLIERS

Insert Removal Tool	Supplier
599-11 11 596	Cinch
CTA-0161	Raychem

B. Contact and Terminus Removal Tools

Table 43
CONTACT REMOVAL TOOL SUPPLIERS

Contact Removal Tool	Supplier
11-8675-16	Amphenol
11-8795-16	Amphenol
ATBO-2062	Astro
ATT 2059	Astro
CTA-1160	Raychem
DRK 237	Daniels
DRK95-16B	Daniels
M81969/14-01	QPL
M81969/14-03	QPL
M81969/8-08	QPL
MS27495R16	QPL
MS27534-16	QPL
RRX22RC	Russtech
RX16-9	Burndy

For training purposes only

C. Contact Crimp Tools

Table 44
CONTACT CRIMP TOOL SUPPLIERS

Crimp Tool	Supplier
AFM-10	Daniels
K817-11	Daniels
K817-11BE	Daniels

BOEING PROPRIETARY - Copyright © Unpublished Work - See title page for details

Table 44 (continued)

Crimp Tool	Supplier
K818-11	Daniels
K818-11BE	Daniels
GWT-202-2204-CTA-165-166	C.T. Davis Systems
GWT-202R-2204R-CTA-165-166	C.T. Davis Systems
M22520/1-01	QPL
M22520/1-04	QPL
M22520/2-01	QPL
M22520/2-09	QPL
WA22	Daniels
WA22BESS	Daniels
WA27F	Daniels

For training purposes only!

D. Contact and Terminus Insertion Tools

Table 45
CONTACT INSERTION TOOL SUPPLIERS

Insertion Tool	Supplier
11-8674-16	Amphenol
11-8794-16	Amphenol
ATBO-1062	Astro
ATBX1108	Astro
CTA-1160	Raychem
M81969/14-01	QPL
M81969/14-03	QPL
M81969/8-07	QPL
MS27495A16	QPL
MS27534-16	QPL
RIT22RC	Russtech
RTM16-4	Burndy

BOEING PROPRIETARY - Copyright © Unpublished Work - See title page for details

ASSEMBLY OF BACC65AA AND BACC65AB CONNECTORS

Paragraph		Page
1.	**GENERAL DATA**	**1**
A.	Damage Conditions - Rear Face of the Insert	1
B.	Damage Conditions - Front Face of the Insert	1
C.	Damage Conditions - BACC69A Fiber Optic Cable Assembly	1
D.	Damage Conditions - EMI Ground Springs	1
E.	Damage Conditions - Cable Clamp	1
F.	Minimum Wire O.D. for an Environmentally Sealed Connector	1
2.	**PART NUMBERS AND DESCRIPTION**	**1**
A.	Connector Shell Part Numbers	1
B.	Connector Description	2
C.	Connector Insert Part Numbers	5
D.	Size 2222, 2020, 1616, 1212, 0808, and 0505 Contact Part Numbers	5
E.	Ground Block Contact Part Numbers	5
F.	Size 5 and Size 8 Coax Contact Part Numbers	6
G.	Size 8 Twinax Contacts	6
H.	Size 8 Quadrax Contacts	6
I.	Fiber Optic Contact Terminus Part Numbers	6
J.	Fiber Optic Alignment Sleeve Insert Part Numbers	6
K.	Fiber Optic Insert Receptacle Cap Part Numbers	7
L.	Backshell Part Numbers	7
M.	Connector Assembly Component Part Numbers	9
3.	**INSERT CONFIGURATIONS**	**10**
A.	BACI10AL and BACI10AM Inserts	10
4.	**CONNECTOR DISASSEMBLY**	**10**
A.	Connector Separation	10
B.	Fiber Optic Insert Receptacle Cap Installation	13
C.	Removal of the Receptacle from a Panel	13
D.	Removal of the Alignment Sleeve Insert	14
E.	Insert Removal	14
F.	Seal Plug and Seal Rod Removal	15
G.	Contact Removal	15
H.	Contact Terminus Removal	16
I.	EMI Ground Spring Removal	16
J.	Removal of the BACC10LD Backshell Cable Clamp	17
K.	Disassembly of the Glenair 527-281ML Backshell	18
L.	Disassembly of the Radiall 617925062 Backshel	19
M.	Jackscrew and Jackpost Removal	21
5.	**CONNECTOR ASSEMBLY**	**22**
A.	Connector Jackscrew and Jackpost Installation	22

20-74-12 CONTENTS

BOEING PROPRIETARY - Copyright © Unpublished Work - See title page for details

For training purposes only!

Paragraph		Page
5.	CONNECTOR ASSEMBLY (continued)	
B.	Installation of the BACC10LD Backshell Cable Clamp	22
C.	Assembly of BACC10LT() Backshell	24
D.	Glenair 527-281ML Backshell - Cable Preparation for a Solder Sleeve Shield Termination	31
E.	Glenair 527-281ML Backshell - Cable Preparation for a Shield Pull Through Shield Termination	32
F.	Glenair 527-281ML Backshell - Connector Assembly Preparation	33
G.	Glenair 527-281ML Backshell - Backshell Assembly with Shield Ground Wires	33
H.	Glenair 527-281ML Backshell - Backshell Assembly without Shield Ground Wires	37
I.	Radiall 617925062 Backshell - Cable Preparation for a Solder Sleeve Shield Termination	39
J.	Radiall 617925062 Backshell - Cable Preparation for a Shield Pull Through Shield Termination	39
K.	Radiall 617925062 Backshell - Backshell Assembly with Shield Ground Wires	40
L.	Radiall 617925062 Backshell - Backshell Assembly without Shield Ground Wires	46
M.	Shield Ground Wire Assembly	49
N.	Shield Ground Wire Assembly for Raychem 55A6160-() Cable	51
O.	Shield Ground Wire Assembly for BMS13-60 Type 27 Class 1 Wire	53
P.	Contact Assembly	58
Q.	Ground Block Contact Assembly	58
R.	Assembly of Size 5 Power Contacts	59
S.	Size 5 Coax Contact Assembly	59
T.	Assembly of Size 8 Coax Contacts	59
U.	Twinax Cable Preparation and Contact Assembly	59
V.	Size 8 Quadrax Contact Assembly	59
W.	Contact Insertion	59
X.	Insertion of Fiber Optic Contact Termini	61
Y.	Size 5 Coax Contact Insertion	61
Z.	Insertion of Size 8 Coax and Size 8 Twinax Contacts	61
AA.	Installation of Size 8 Quadrax Contacts	61
AB.	Seal of an Empty Contact Cavity	61
AC.	Seal of an Empty Contact Terminus Cavity	61
AD.	EMI Ground Spring Installation	61
AE.	Insert Installation	62
AF.	Installation of the Fiber Optic Alignment Sleeve Insert	63
AG.	Shield Terminator Band Installation	63
6.	CONNECTOR POLARIZATION	63
A.	Connector Polarization	63
B.	Polarization Key and Polarization Keyway Positions	64

For training purposes only!

20-74-12 CONTENTS

BOEING PROPRIETARY - Copyright © Unpublished Work - See title page for details

ASSEMBLY OF BACC65AA AND BACC65AB CONNECTORS

Paragraph		Page
6.	**CONNECTOR POLARIZATION (continued)**	
C.	Change of the Polarization Key and Keyway Positions	65
D.	Change of the Polarization Code in the Part Number on the Connector	67
7.	**INSPECTION AND CLEANING OF A FIBER OPTIC ALIGNMENT SLEEVE INSERT**	**68**
A.	Inspection and Cleaning of a Fiber Optic Alignment Sleeve Insert	68
8.	**CONNECTOR INSTALLATION**	**68**
A.	Connector Equipment Identification Number	68
B.	Installation of the Receptacle in a Panel	70
C.	Installation of the Receptacle with a Ground Block	72
D.	Installation of the Receptacle with a Ground Block in an Unpressurized Area	74
E.	Plug and Receptacle Connection	74
F.	Fiber Optic Insert Receptacle Cap Removal	76
9.	**APPROVED TOOL SUPPLIERS**	**77**
A.	Contact Removal Tools	77
B.	Contact Crimp Tools	77
C.	Contact Insertion Tools	77
D.	Contact Terminus Removal Tools	77
E.	Contact Terminus Insertion Tools	78
F.	Special Tools	78

For training purposes only!

BOEING PROPRIETARY - Copyright © Unpublished Work - See title page for details

ASSEMBLY OF BACC65AA AND BACC65AB CONNECTORS

1. GENERAL DATA

A. Damage Conditions - Rear Face of the Insert

Refer to Subject 20-74-02.

B. Damage Conditions - Front Face of the Insert

Refer to Subject 20-74-02.

C. Damage Conditions - BACC69A Fiber Optic Cable Assembly

The cable assembly must be replaced when one of these conditions occur:

- The fiber optic cable has damage that makes the cable assembly unserviceable; refer to Subject 20-12-20
- The fiber optic contact terminus has damage; refer to Subject 20-12-20.

D. Damage Conditions - EMI Ground Springs

The EMI Ground Springs must be replaced when one or more of the ground spring fingers is bent or broken.

E. Damage Conditions - Cable Clamp

The cable clamp must be replaced if:

- The clamp has a crack
- A wire harness tie tab is broken.

Refer to Figure 21.

F. Minimum Wire O.D. for an Environmentally Sealed Connector

Refer to Subject 20-74-02.

2. PART NUMBERS AND DESCRIPTION

A. Connector Shell Part Numbers

Table 1
CONNECTOR SHELL PART NUMBERS

Boeing Standard	Type
BACC65AA()	Plug
BACC65AB()	Receptacle

For training purposes only.

BOEING PROPRIETARY - Copyright © Unpublished Work - See title page for details

ASSEMBLY OF BACC65AA AND BACC65AB CONNECTORS

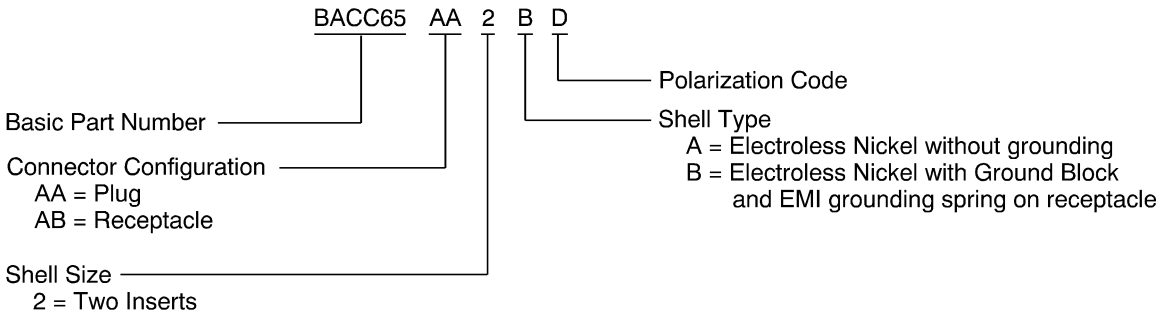

BACC65AA() AND BACC65AB() PART NUMBER STRUCTURE
Figure 1

Table 2
APPROVED SUPPLIERS OF BOEING STANDARD CONNECTOR SHELLS

Connector Shell	Supplier
BACC65AA()	Radiall
BACC65AB()	Radiall

For training purposes only.

B. Connector Description

Refer to:

- Figure 2 for the configuration of the BACC65AA() plug and BACC65AB() receptacle
- Figure 3 for the BACC65AA() plug
- Figure 4 for the BACC65AB() receptacle
- Figure 5 for the BACC65AA() plug with a ground block
- Figure 6 for the BACC65AB() receptacle with a ground block.

The BACC65AA and BACC65AB connectors have these technical features:

- A rectangular metal shell
- A ground block
- EMI ground springs on the receptacle with a ground block
- A center jackscrew and jackpost for the retention of the plug and receptacle
- 6 polarization positions
- The polarization key is part of the jackpost for the receptacle
- The polarization keyway is part of the jackscrew for the plug
- 2 removable inserts
- Rear release, rear removal, crimp type contacts
- Rear release, rear removal, fiber optic termini
- A removable strain relief cable clamp, or EMI backshell.

BOEING PROPRIETARY - Copyright © Unpublished Work - See title page for details

ASSEMBLY OF BACC65AA AND BACC65AB CONNECTORS

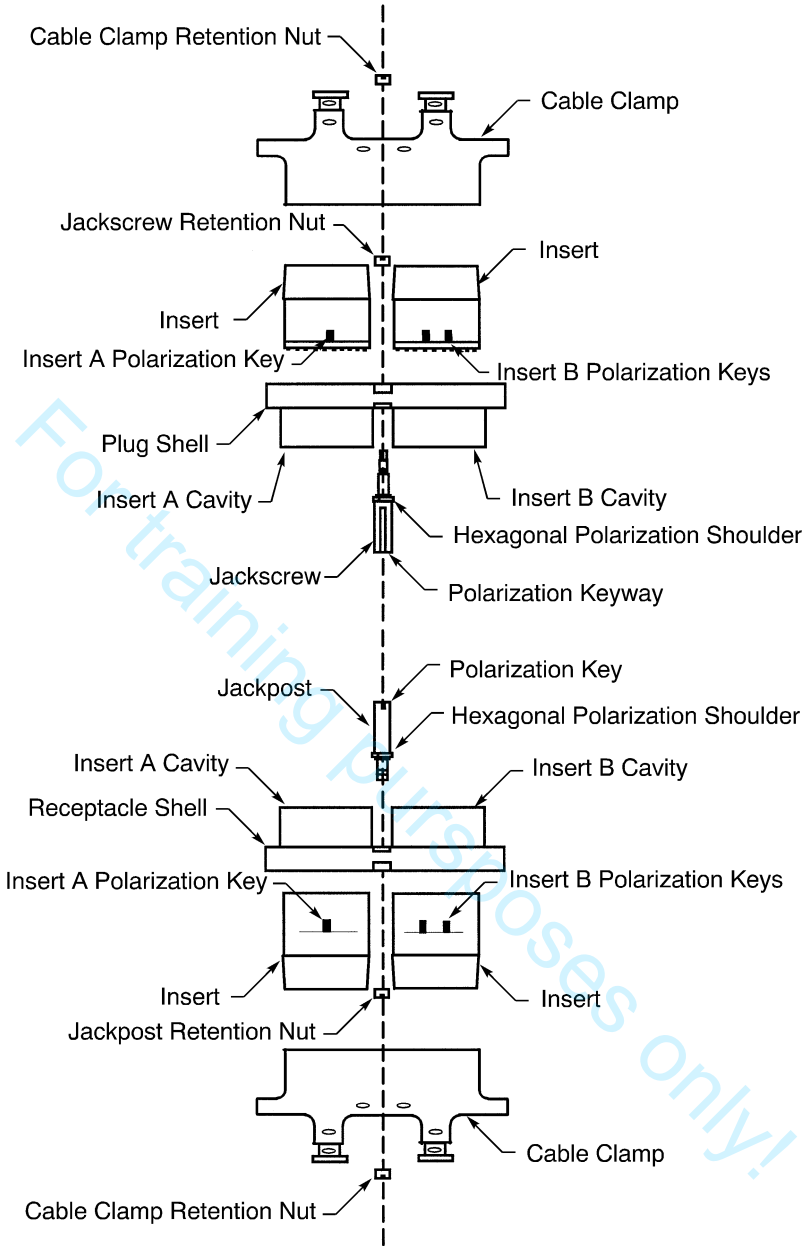

BACC65AA() AND BACC65AB() CONNECTOR CONFIGURATION
Figure 2

For training purposes only!

BOEING PROPRIETARY - Copyright © Unpublished Work - See title page for details

ASSEMBLY OF BACC65AA AND BACC65AB CONNECTORS

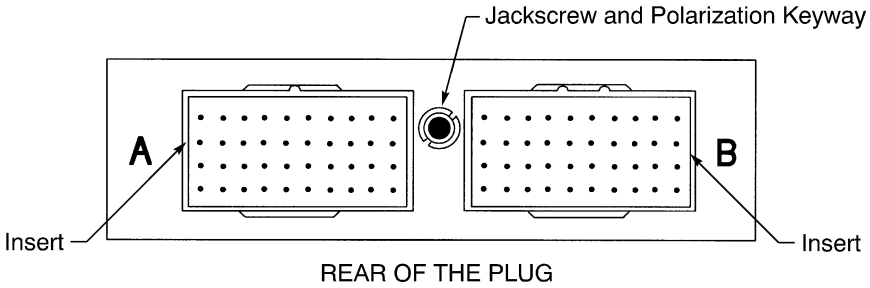

BACC65AA() PLUG
Figure 3

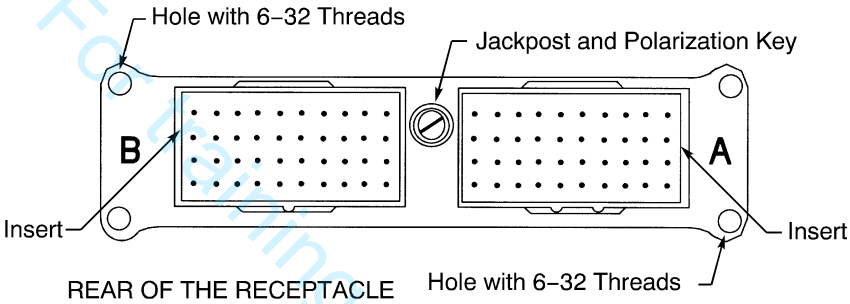

BACC65AB() RECEPTACLE
Figure 4

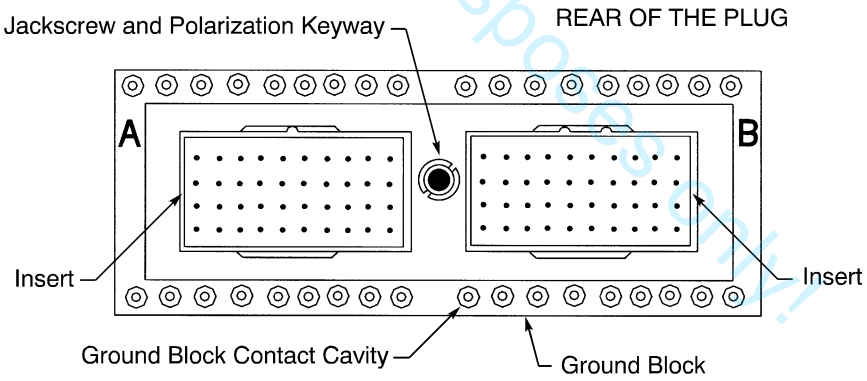

BACC65AA() PLUG WITH A GROUND BLOCK
Figure 5

For training purposes only!

BOEING PROPRIETARY - Copyright © Unpublished Work - See title page for details

ASSEMBLY OF BACC65AA AND BACC65AB CONNECTORS

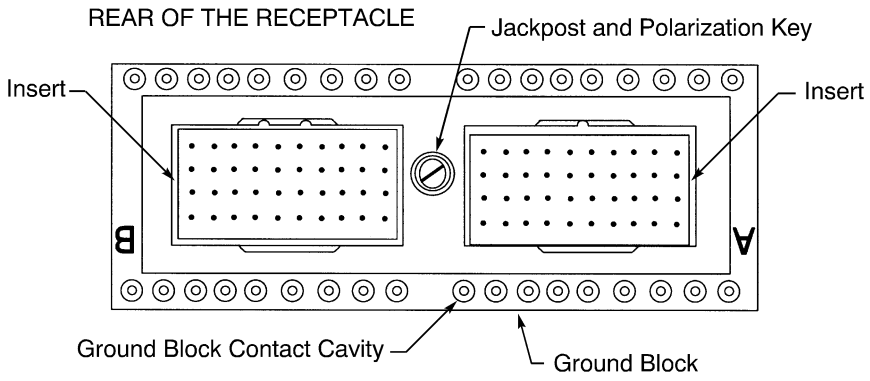

BACC65AB() RECEPTACLE WITH A GROUND BLOCK
Figure 6

For training purposes only!

C. Connector Insert Part Numbers

Refer to Subject 20-74-02.

D. Size 2222, 2020, 1616, 1212, 0808, and 0505 Contact Part Numbers

Refer to Subject 20-74-02.

E. Ground Block Contact Part Numbers

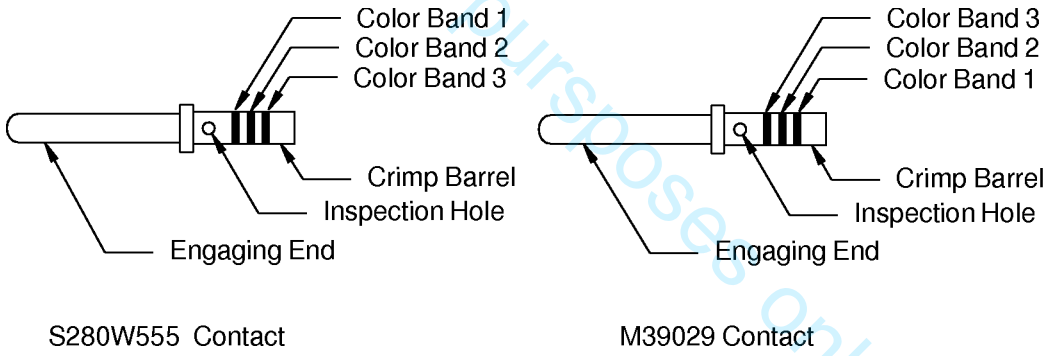

GROUND BLOCK CONTACTS
Figure 7

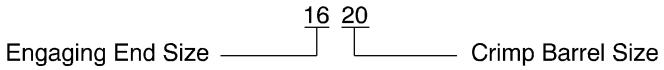

EXAMPLE OF A CONTACT SIZE
Figure 8

BOEING PROPRIETARY - Copyright © Unpublished Work - See title page for details

Table 3
GROUND BLOCK CONTACT PART NUMBERS

Contact Size		Contact Type	Part Number	Supplier	Color Code	
Engaging End	Crimp Barrel				Band	Color
16	20	Pin	M39029/1-101	QPL	1	Brown
					2	Black
					3	Brown
			S280W555-920	Boeing	1	Red
					2	Red
					3	Red
	18	Pin	S280W555-918	Boeing	1	Red
					2	White
					3	Red

Table 4
APPROVED SUPPLIERS OF BOEING STANDARD GROUND BLOCK CONTACTS

Contact	Supplier
S280W555-920	FCI/Burndy
	Tri Star
S280W555-918	FCI/Burndy
	Tri Star

F. Size 5 and Size 8 Coax Contact Part Numbers

Refer to Subject 20-74-02.

G. Size 8 Twinax Contacts

Refer to Subject 20-74-02.

H. Size 8 Quadrax Contacts

Refer to Subject 20-74-02.

I. Fiber Optic Contact Terminus Part Numbers

Refer to Subject 20-74-02.

J. Fiber Optic Alignment Sleeve Insert Part Numbers

Refer to Subject 20-74-02.

For training purposes only!

BOEING PROPRIETARY - Copyright © Unpublished Work - See title page for details

ASSEMBLY OF BACC65AA AND BACC65AB CONNECTORS

K. Fiber Optic Insert Receptacle Cap Part Numbers

Table 5
FIBER OPTIC INSERT RECEPTACLE CAP PART NUMBERS

Connector Type	Part Number	Supplier
Receptacle	617954023	Radiall

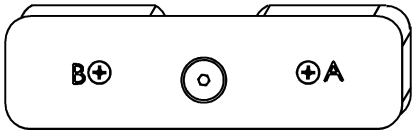

FIBER OPTIC INSERT RECEPTACLE CAP
Figure 9

L. Backshell Part Numbers

Table 6
BACKSHELL PART NUMBERS

Component	Boeing Standard	Part Number	Reference
Strain Relief Backshell	BACC10LD()	-	Figure 10
EMI Backshell	BACC10LT()	-	Figure 11
	-	527-281ML	Figure 12
	-	617925062	Figure 13

Table 7
APPROVED SUPPLIERS OF BOEING STANDARD BACKSHELLS

Part Number	Supplier
BACC10LD()	Radiall
BACC10LT()	Glenair

Table 8
APPROVED SUPPLIERS OF OTHER BACKSHELLS

Part Number	Supplier
527-281ML	Glenair
617925062	Radiall

For training purposes only!

BOEING PROPRIETARY - Copyright © Unpublished Work - See title page for details

ASSEMBLY OF BACC65AA AND BACC65AB CONNECTORS

Table 9
ALTERNATIVE PART NUMBERS FOR BOEING STANDARD BACKSHELLS

Specified Backshell	Alternative Backshell	
	Part Number	Supplier
BACC20LT()	527-260()	Glenair

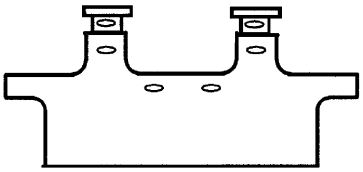

BACC10LD1 BACKSHELL CABLE CLAMP
Figure 10

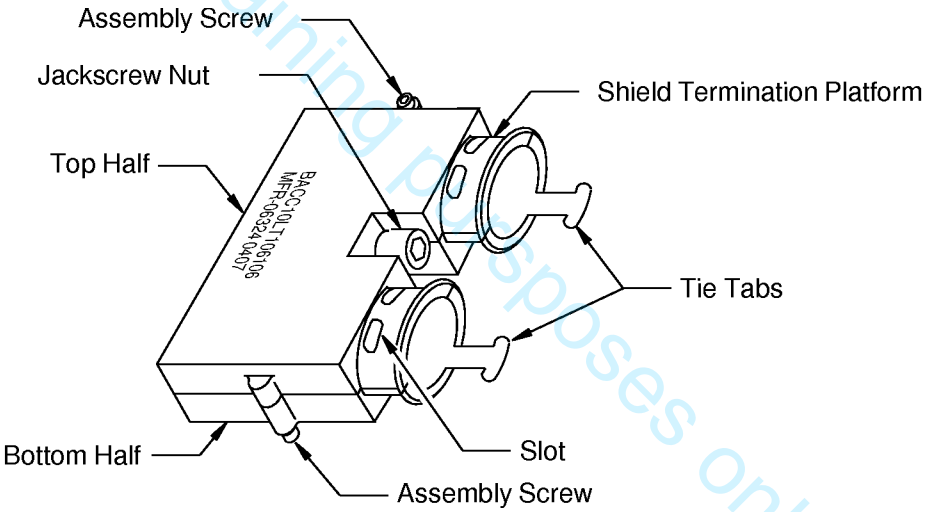

BACC10LT106106 EMI BACKSHELL
Figure 11

For training purposes only!

BOEING PROPRIETARY - Copyright © Unpublished Work - See title page for details

ASSEMBLY OF BACC65AA AND BACC65AB CONNECTORS

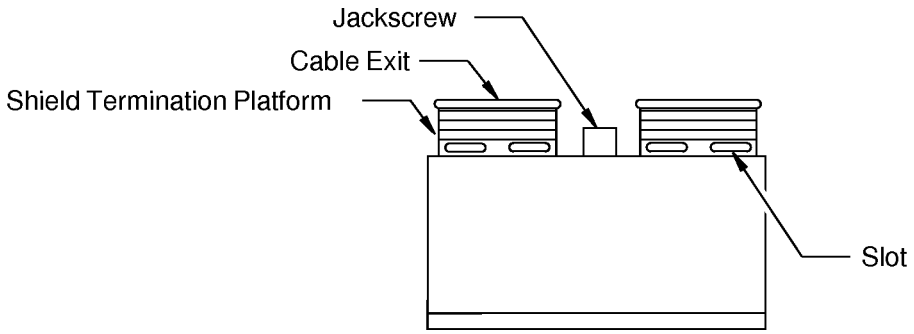

GLENAIR 527-281ML EMI BACKSHELL
Figure 12

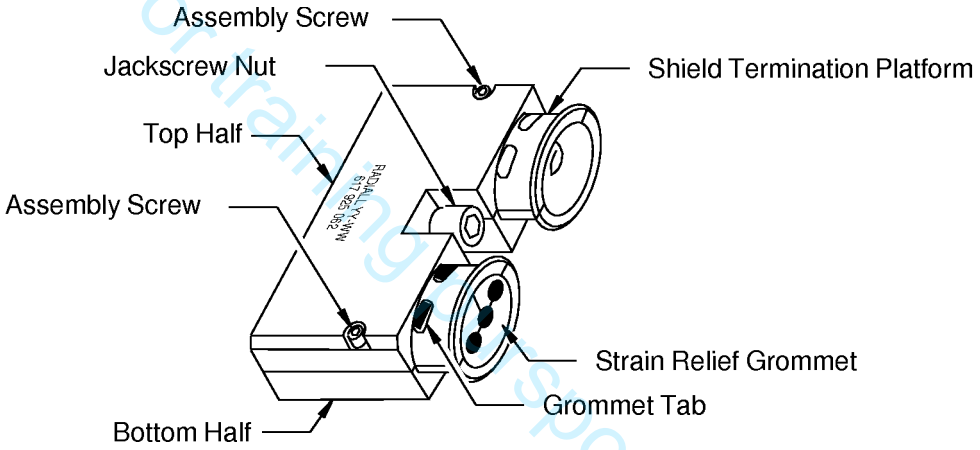

RADIALL 617925062 EMI BACKSHELL
Figure 13

For training purposes only!

M. Connector Assembly Component Part Numbers

Table 10
CONNECTOR ASSEMBLY COMPONENT PART NUMBERS

Component	Connector Type	Boeing Standard
Ground Spring, EMI	Receptacle	BACC65AH1
Jackpost	Receptacle	BACC65AG1
Jackscrew	Plug	BACC65AF1

Table 11
APPROVED SUPPLIERS OF BOEING STANDARD CONNECTOR ASSEMBLY COMPONENTS

Component	Supplier
BACC65AG1	Radiall
BACC65AF1	Radiall

BOEING PROPRIETARY - Copyright © Unpublished Work - See title page for details

Table 11 (continued)

Component	Supplier
BACC65AH1	RadiaII

3. **INSERT CONFIGURATIONS**

A. **BACI10AL and BACI10AM Inserts**

Refer to Subject 20-74-02.

4. **CONNECTOR DISASSEMBLY**

A. **Connector Separation**

Table 12
NECESSARY TOOLS

Tool	Type	Size (inch)
Driver	Allen Wrench	9/64
	Screwdriver, Hex	9/64

(1) Make a selection of a driver from Table 12.

(2) Turn the jackscrew on the plug counterclockwise with the driver until it is disengaged. Refer to Figure 14.

For training pursposes only!

BOEING PROPRIETARY - Copyright © Unpublished Work - See title page for details

ASSEMBLY OF BACC65AA AND BACC65AB CONNECTORS

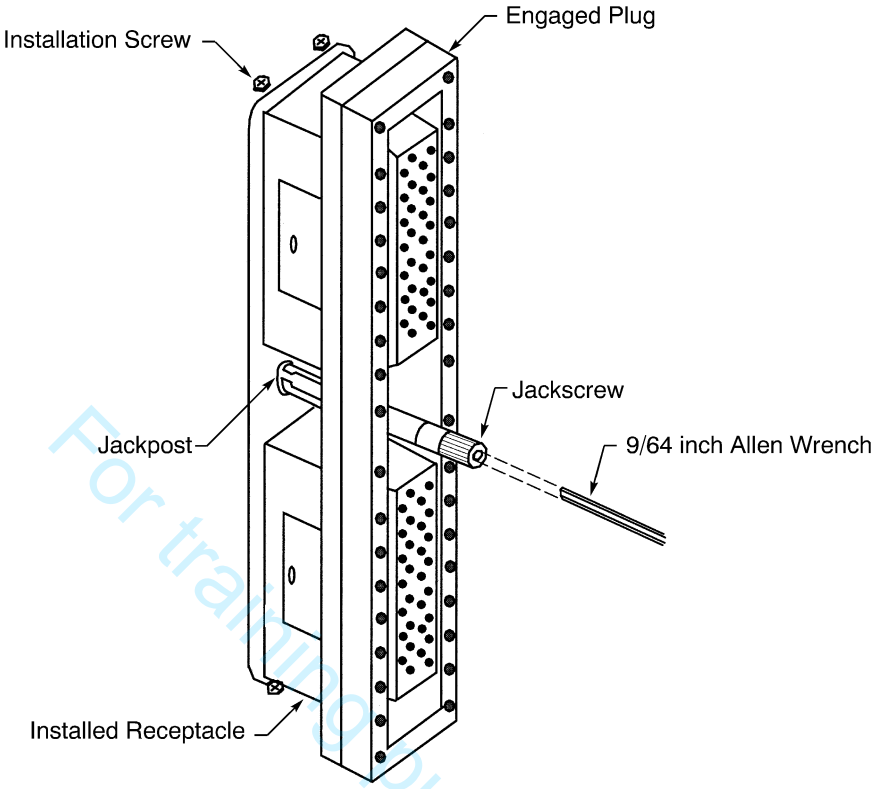

ALIGNMENT OF THE WRENCH
Figure 14

(3) Pull the plug from the receptacle. Refer to Figure 15.
Make sure to keep the plug aligned with the receptacle during their separation.

For training purposes only!

BOEING PROPRIETARY - Copyright © Unpublished Work - See title page for details

ASSEMBLY OF BACC65AA AND BACC65AB CONNECTORS

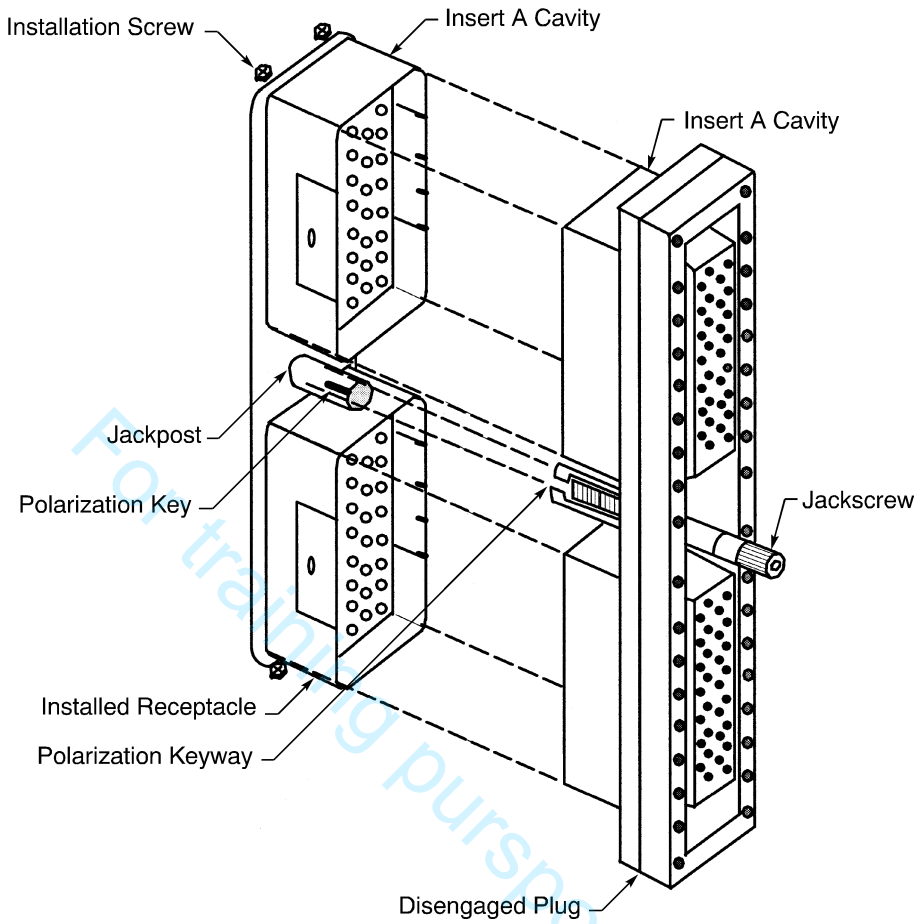

SEPARATION OF THE PLUG AND THE RECEPTACLE
Figure 15

(4) For a receptacle with a fiber optic insert, install a protective cap. Refer to Paragraph 4.B..

NOTE: A sealed clean plastic bag is a satisfactory alternative for the protection from contamination.

CAUTION: THE CONNECTOR WITH A FIBER OPTIC CONTACT TERMINUS MUST HAVE PROTECTION FROM CONTAMINATION WHEN THE CONNECTOR IS NOT CONNECTED. CONTAMINATION CAN CAUSE UNSATISFACTORY PERFORMANCE OF THE CONNECTOR.

(5) For a plug connector with a fiber optic insert, put the plug in a clean plastic bag.

CAUTION: THE CONNECTOR WITH A FIBER OPTIC CONTACT TERMINUS MUST HAVE PROTECTION FROM CONTAMINATION WHEN THE CONNECTOR IS NOT CONNECTED. CONTAMINATION CAN CAUSE UNSATISFACTORY PERFORMANCE OF THE CONNECTOR.

For training purposes only

BOEING PROPRIETARY - Copyright © Unpublished Work - See title page for details

B. Fiber Optic Insert Receptacle Cap Installation

Table 13
NECESSARY TOOLS

Tool	Type	Size (inch)
Driver	Allen Wrench	9/64
	Screwdriver, Hex	9/64
Torque	Allen Wrench	9/64
	Screwdriver, Hex	9/64

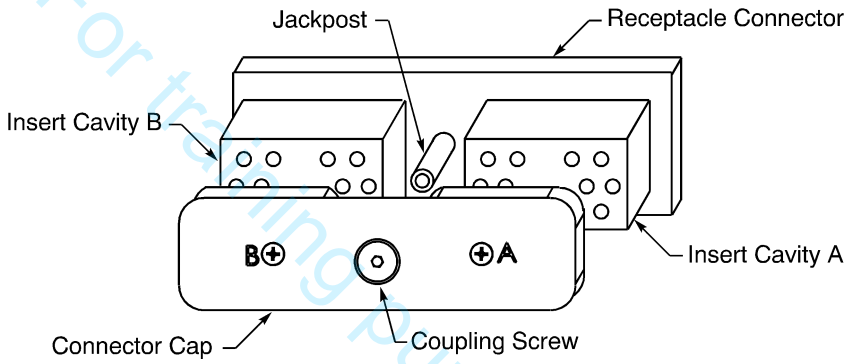

INSTALLATION OF THE CAP
Figure 16

(1) Make a selection of these tools from Table 13:
- A driver
- A torque tool.

NOTE: The driver can have a ball type end.

(2) Align the cap with the face of the engaging face of the receptacle.
Make sure that the end of the cap that has threads is pointed to the face of the receptacle.

(3) Fully engage the threads of the installation screw and the screw hole in the receptacle.

(4) Torque the screw to 7 inch-pounds ±1 inch-pound.

C. Removal of the Receptacle from a Panel

Table 14
NECESSARY TOOLS

Tool	Type	Size (inch)
Driver	Phillips Head Screwdriver	-
	Socket Wrench	1/4

(1) Make a selection of a driver from Table 14.

BOEING PROPRIETARY - Copyright © Unpublished Work - See title page for details
For training purposes only.

(2) Remove the plastic tie straps or wire harness ties that:
- Hold the wire harness to structure
- Are less than 9 inches from the connector.

(3) Remove the four installation screws. Refer to Figure 17.

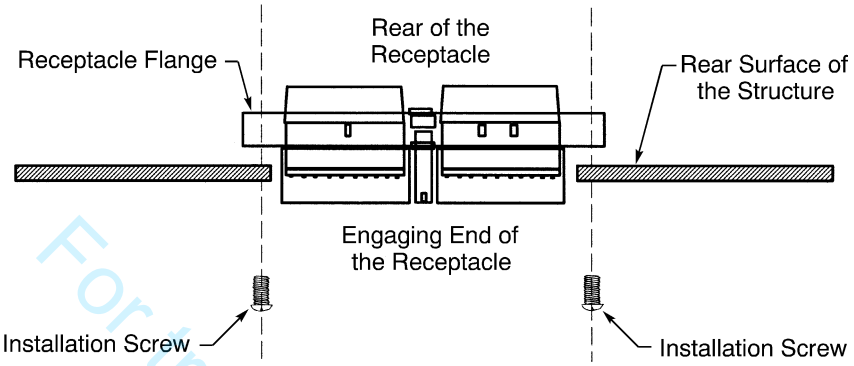

REMOVAL OF THE RECEPTACLE
Figure 17

(4) Discard the four screws.

(5) Pull the connector from the structure.

D. Removal of the Alignment Sleeve Insert

Refer to Subject 20-74-02.

E. Insert Removal

NOTE: It is not necessary to remove the insert contacts, or a strain relief cable clamp before an insert is removed.

NOTE: It is necessary to remove an EMI backshell before an insert can be removed.

Table 15
INSERT REMOVAL TOOLS

Tool	Part Number
Insert Removal Tool	282 521 002

(1) Make a selection of an insert removal tool from Table 15.

(2) If the connector has:
- A cable clamp, remove the plastic tie straps or the wire harness ties from the clamp
- A ground block, remove the ground block contacts from the ground block. Refer to Paragraph 4.G..

(3) From the rear of the connector, align the two ends of the removal tool with the shorter sides of the insert. Refer to Figure 18.

For training purposes only.

BOEING PROPRIETARY - Copyright © Unpublished Work - See title page for details

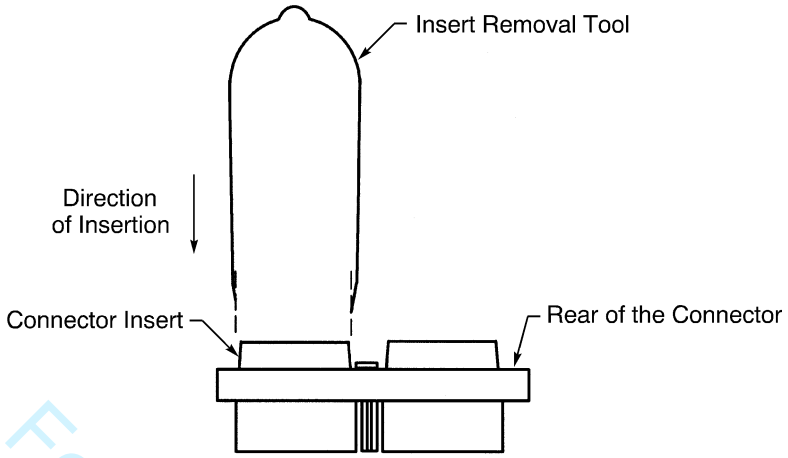

ALIGNMENT OF THE INSERT REMOVAL TOOL
Figure 18

(4) Carefully push the removal tool between the insert cavity and the insert.
Make sure to keep the tool aligned with the insert.

(5) Push the two sides of the tool at the same time into the connector.

(6) Pull the insert removal tool and the insert out of the connector shell. Refer to Figure 19.
Make sure that the connector shell and the insert stay aligned during their separation.

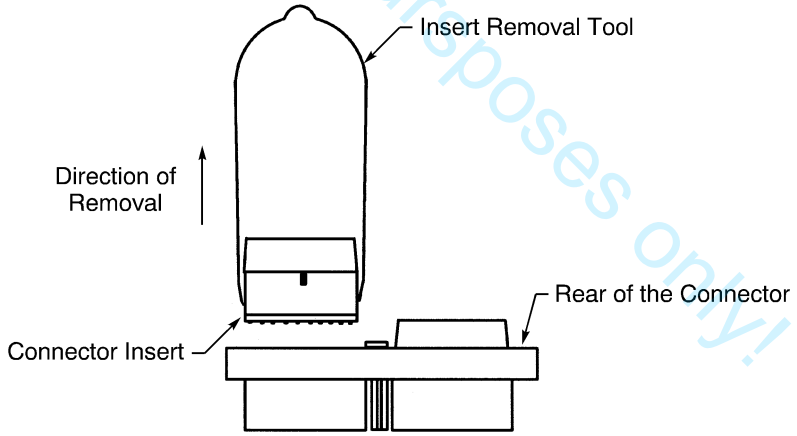

REMOVAL OF THE INSERT
Figure 19

For training purposes only!

F. Seal Plug and Seal Rod Removal

Refer to Subject 20-74-02.

G. Contact Removal

This paragraph gives the procedure to remove size 16 ground block contacts from the connector ground block.

Refer to Subject 20-74-02. to remove contacts from the connector insert.

BOEING PROPRIETARY - Copyright © Unpublished Work - See title page for details

Table 16
REMOVAL TOOLS FOR SIZE 16 GROUND BLOCK CONTACTS

Ground Block Contact Cavity Size	Removal Tool	
	Part Number	Color
16	ATR2080	-
	ATR2079	-
	M81969/14-11	White
	RRX20B	-

(1) Make a selection of a contact removal tool from Table 16 for the ground block contacts.

CAUTION: DO NOT USE A REMOVAL TOOL THAT HAS A DEFECT. A REMOVAL TOOL THAT HAS A DEFECT CAN CAUSE DAMAGE TO THE GROMMET OR THE RETENTION CLIP.

(2) Remove the plastic tie straps or the wire harness ties that are less than 6 inches from the connector.

(3) Put the tip of the removal tool on the wire near the grommet or the ground block.

(4) Axially align the removal tool and the contact cavity.

(5) Carefully push the removal tool into the contact cavity until it stops.
Make sure to keep the removal tool and the contact cavity aligned.

(6) Carefully pull the wire and the removal tool out of the contact cavity at the same time.
Make sure to keep the removal tool and the contact cavity aligned.

(7) If the contact is not released:
(a) Pull the contact removal tool out of the contact cavity.
(b) Turn the removal tool approximately 90 degrees.
(c) Do Step (3) through Step (6) again.

H. Contact Terminus Removal

Refer to Subject 20-74-02.

I. EMI Ground Spring Removal

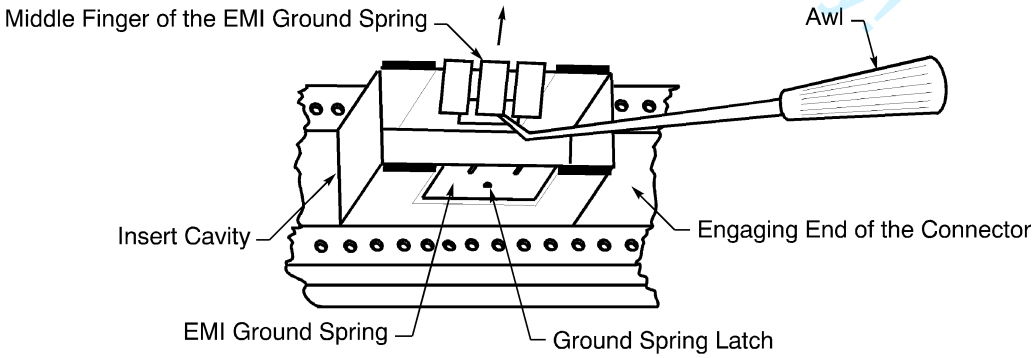

EMI GROUND SPRING REMOVAL
Figure 20

For training purposes only!

BOEING PROPRIETARY - Copyright © Unpublished Work - See title page for details

ASSEMBLY OF BACC65AA AND BACC65AB CONNECTORS

Refer to Figure 20.

(1) Make a selection of a tool with a small sharp point at a right angle to the handle.

NOTE: An awl is a satisfactory tool.

(2) Carefully put the tip of the tool between the inner wall of the insert cavity and the bottom of the middle finger of the ground spring.

(3) Push the tip of the tool through the slot against the ground spring latch that is behind the ground spring fingers.

(4) Pull the ground spring away from the insert cavity.

J. Removal of the BACC10LD Backshell Cable Clamp

Table 17
CABLE CLAMP REMOVAL TOOLS

Tool	Type	Size (inch)	Part Number
Driver	Retention Nut Wrench	-	282664
	Socket Wrench	1/4	-

For training purposes only!

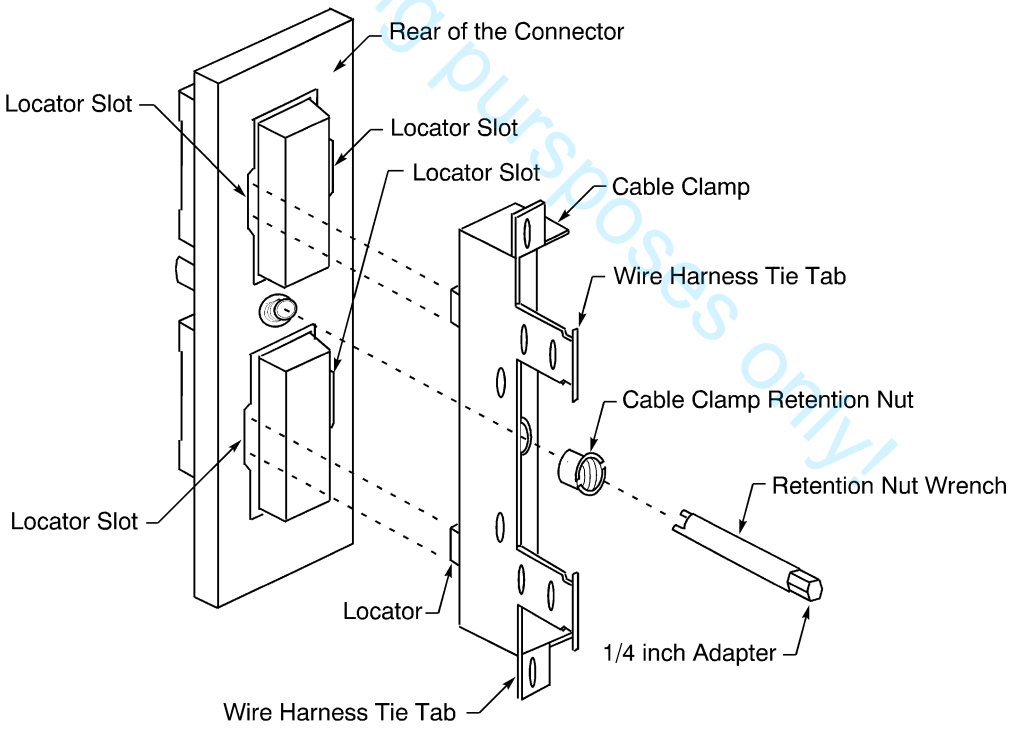

CABLE CLAMP REMOVAL
Figure 21

Refer to Figure 21:

BOEING PROPRIETARY - Copyright © Unpublished Work - See title page for details

(1) Make a selection of these tools from Table 17.
- A retention nut wrench
- A socket wrench.

(2) Remove the plastic tie straps or the wire harness tie from the cable clamp.

(3) If the connector has a ground block, and the ground block has contacts that are installed, remove the contacts from the ground block. Refer to Paragraph 4.G.

(4) If the inserts are installed and have wired contacts, remove the inserts from the connector. Refer to Paragraph 4.E.

(5) Put the retention nut wrench with the socket wrench on the cable clamp retention nut.

(6) Turn the wrench counterclockwise until the threads of the cable clamp retention nut are disengaged with the threads of the jackscrew or jackpost.

(7) Pull the cable clamp from the connector.

Make sure to keep the connector shell and the cable clamp aligned during their separation.

K. Disassembly of the Glenair 527-281ML Backshell

Table 18
NECESSARY TOOLS

Tool	Type	Part Number
Screwdriver	Flat Blade	An available source
Diagonal Cutters	-	An available source

(1) Make a selection of a screwdriver from Table 18.

(2) Remove the overall heat shrinkable sleeve from the wire harness. Refer to Subject 20-10-14.

(3) Remove the layers of silicone tape from the wire harness.

(4) Remove the layers of silicone tape from the shield termination platforms.

(5) If applicable, remove the layers of PTFE tape from the shield termination platforms.

(6) If applicable, remove the shield terminator band from the shield termination platforms:

(a) Make a selection of a diagonal cutters from Table 18.

(b) Hold the buckle of the shield terminator band with the cutters. Refer to Figure 22.

For training purposes only!

BOEING PROPRIETARY - Copyright © Unpublished Work - See title page for details

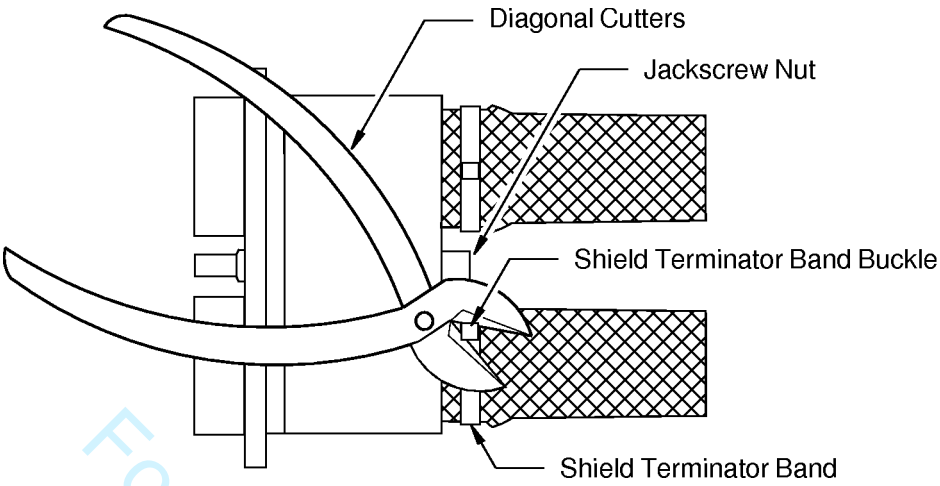

REMOVAL OF THE SHIELD TERMINATOR BAND
Figure 22

(c) Rotate the cutters and lift the buckle of the band away from the backshell until the buckle releases or the band breaks.

(d) Remove the band.

(7) Loosen the jackscrew nut.

(8) Remove the backshell from the connector.

L. Disassembly of the Radiall 617925062 Backshel

Table 19
NECESSARY TOOLS

Tool	Size (inch)	Supplier
Diagonal Cutter	-	An available source
Screw Bit, Hex	5/64	An available source
	5/16	An available source
Screwdriver, Hex	5/64	An available source
	5/16	An available source
Torque Tool, Hex	-	An available source

(1) Make a selection of these tools from Table 19.
- A 5/64 hex screw bit
- A 5/16 hex screw bit
- A 5/64 hex screwdriver
- A 5/16 hex screwdriver
- A screw bit.

(2) Remove the layers of silicone tape from the backshell and the wire harness.

(3) If the backshell has shield terminations:

BOEING PROPRIETARY - Copyright © Unpublished Work - See title page for details
For training purposes only

ASSEMBLY OF BACC65AA AND BACC65AB CONNECTORS

(a) Remove the layer of silicone tape from the shield termination platform.

(b) Remove the PTFE tape from the shield termination platform.

(c) Make a selection of a diagonal cutters from Table 19.

(d) Hold the buckle of the shield terminator band with the cutters. Refer to Figure 23

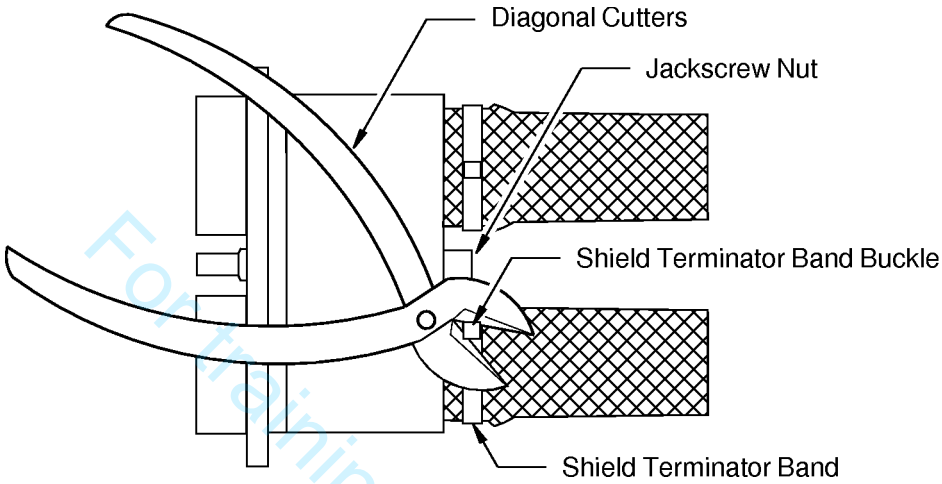

REMOVAL OF THE SHIELD TERMINATOR BAND
Figure 23

(e) Rotate the cutters and lift the buckle of the band away from the backshell until the buckle releases or the band breaks.

(f) Remove the band.

(4) Remove the two backshell assembly screws at the rear of the connector.
Refer to Figure 24.

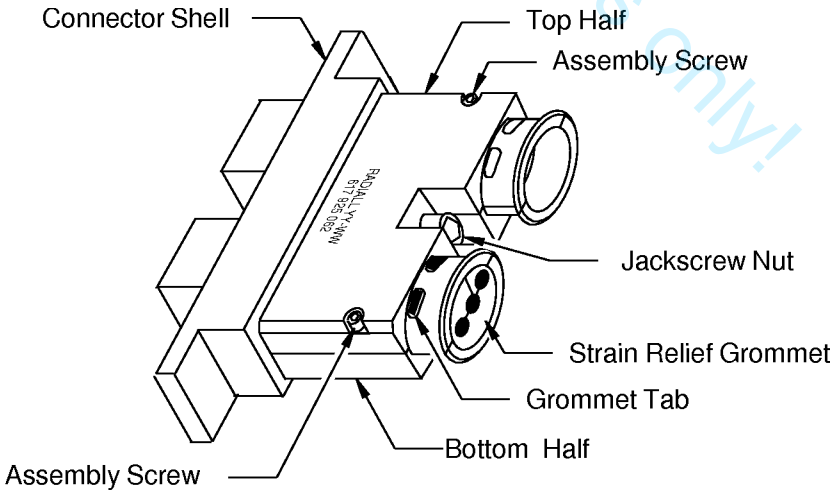

LOCATION AND IDENTIFICATION OF BACKSHELL ITEMS
Figure 24

For training purposes only!

BOEING PROPRIETARY - Copyright © Unpublished Work - See title page for details

(5) Remove the top half of the backshell.

(6) Loosen the jackscrew nut a small amount with a screwdriver.

(7) Carefully pull each wire out of the wire slot through the slit of the grommet.
Make sure that lateral force is not applied to the contact assembly in the insert.

CAUTION: IF TOO MUCH LATERAL FORCE IS APPLIED TO A CONTACT ASSEMBLY IN THE INSERT, DAMAGE TO THE INSERT CAN OCCUR.

(8) Disengage the jackscrew nut from the jackscrew of the connector.

(9) Remove the bottom half of the backshell from the connector.

M. Jackscrew and Jackpost Removal

For training purposes only!

Table 20
JACKSCREW AND JACKPOST REMOVAL TOOLS

Tool	Type	Size (inch)	Part Number
Driver	Retention Nut Wrench	-	282664
	Socket Wrench	1/4	-

(1) Make a selection of these tools from Table 20.
- A retention nut wrench
- A socket wrench.

(2) Make a selection of a socket wrench from Table 20.

(3) If a cable clamp is installed, remove it. Refer to Paragraph 4.J.

(4) Put the retention nut wrench with the socket wrench on the retention nut on the rear of the connector. Refer to Figure 25.

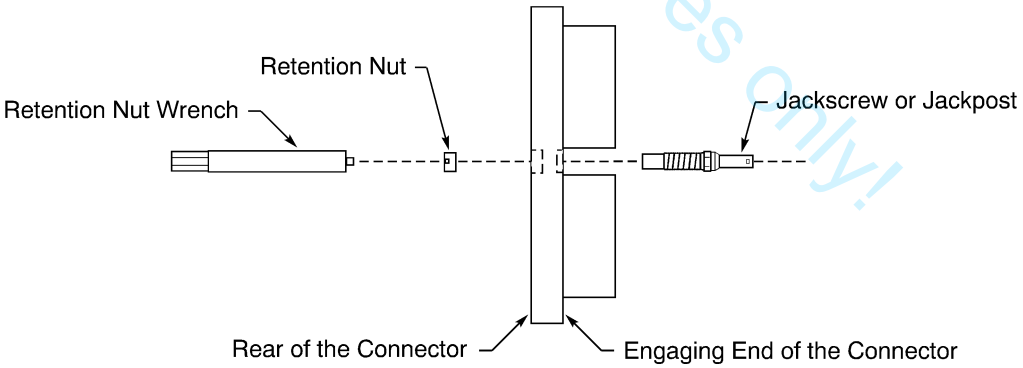

JACKSCREW AND JACKPOST REMOVAL
Figure 25

(5) Turn the wrench counterclockwise until the threads of the retention nut are disengaged with the threads of the jackscrew or jackpost.

(6) Pull the jackscrew or jackpost from engaging side of the connector. Refer to Figure 25.

BOEING PROPRIETARY - Copyright © Unpublished Work - See title page for details

Make sure to keep the jackscrew or the jackpost perpendicular to the connector shell during the separation.

5. CONNECTOR ASSEMBLY

A. Connector Jackscrew and Jackpost Installation

Polarization of the connector must be done before the installation of the cable clamp.

Refer to Paragraph 6..

B. Installation of the BACC10LD Backshell Cable Clamp

The cable clamp:

- Must be installed on the connector before the installation of an insert with assembled contacts
- Can be installed before or after the installation of an insert with unwired contacts.

Table 21
NECESSARY MATERIALS

Material	Part Number	Supplier
Thread Lock Compound	222	Loctite
Tape	Scotch 70	3M

Table 22
NECESSARY TOOLS

Tool	Type	Size (inch)	Part Number
Driver	Retention Nut Wrench	-	282664
Torque	Socket Torque Wrench	1/4	-

For training purposes only!

BOEING PROPRIETARY - Copyright © Unpublished Work - See title page for details

ASSEMBLY OF BACC65AA AND BACC65AB CONNECTORS

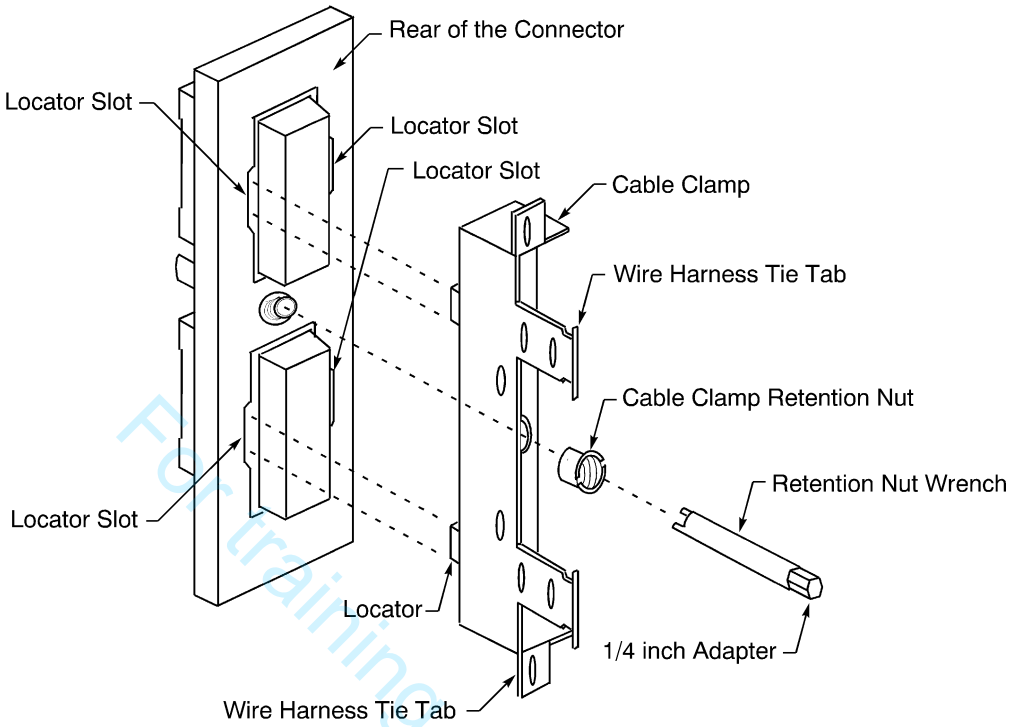

CABLE CLAMP INSTALLATION
Figure 26

Refer to Figure 26.

(1) Make a selection of these tools from Table 22.
- Retention nut wrench
- Socket torque wrench.

(2) Make a selection of these materials from Table 21.
- Thread lock compound
- Tape.

(3) Align the four locators on the cable clamp with the four slots on the rear of the connector.

(4) Put the cable clamp on the rear side of the connector. Make sure that the locators are in the slots.

(5) Put a drop of the thread lock compound on a minimum of two threads of the cable clamp retention nut included with the cable clamp.

(6) Engage the threads of the cable clamp retention nut with the threads of the jackscrew.

(7) Torque the cable clamp retention nut 7 inch-pounds ±1 inch-pound.

(8) Wind two layers of tape around one of the wire harnesses where the harness is against a wire harness tie tab.

(9) Assemble a wire harness tie or install a plastic tie strap on the wire harness and the wire harness tie tab. Refer to Subject 20-10-11.

(10) Do Step (8) and Step (9) for the other wire harness.

For training purposes only!

BOEING PROPRIETARY - Copyright © Unpublished Work - See title page for details

C. Assembly of BACC10LT() Backshell

Table 23
NECESSARY MATERIALS

Material	Part Number	Supplier
Silicone Tape	A-A-59163, Type I	Refer to Subject 20-00-11

Table 24
NECESSARY PARTS

Part	Part Number	Supplier
Shield Terminator Band	BACB42F4	Refer to Subject 20-00-11
	BACB42F6	Refer to Subject 20-00-11

(1) Remove 1.9 inches ±0.2 inch of the outer jacket from the end of the shielded cable. Refer to Figure 27.

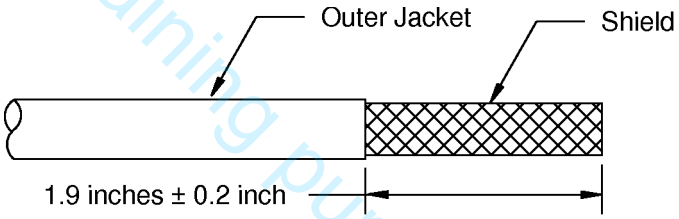

CABLE JACKET REMOVAL LENGTH
Figure 27

(2) If a shield ground wire is necessary, assemble a shield ground wire on the end of the cable.
- Refer to Subject 20-10-15 for the assembly of a solder sleeve shield ground wire
- Refer to Subject 20-10-15 for the assembly of a shield pull through shield ground wire.

Make sure the shield ground wire points rearward, away from the end of the cable. Refer to Figure 28.

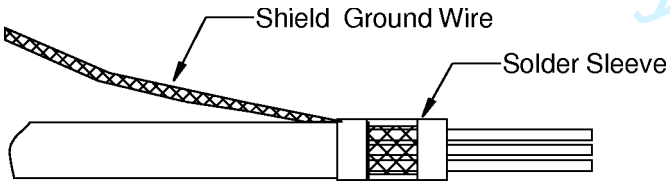

POSITION OF THE SHIELD GROUND WIRE
Figure 28

(3) If a shield ground wire is not necessary, assemble a shield dead end on the end of the cable. Refer to Subject 20-10-15.

(4) Assemble the contacts on the conductors. Refer to Subject 20-74-02.

(5) Install the contacts into the connector insert(s). Refer to Subject 20-74-02.

For training purposes only!

BOEING PROPRIETARY - Copyright © Unpublished Work - See title page for details

ASSEMBLY OF BACC65AA AND BACC65AB CONNECTORS

(6) Make a selection of a Grade B, Class 1 heat shrinkable sleeve from Subject 20-00-11.

(7) Put an approximately 0.5 inch length of the heat shrinkable sleeve on each tie tab.

(8) Shrink the sleeve on each tie tab.

Refer to:

- Figure 29
- Subject 20-10-14 for the procedure to shrink the sleeve.

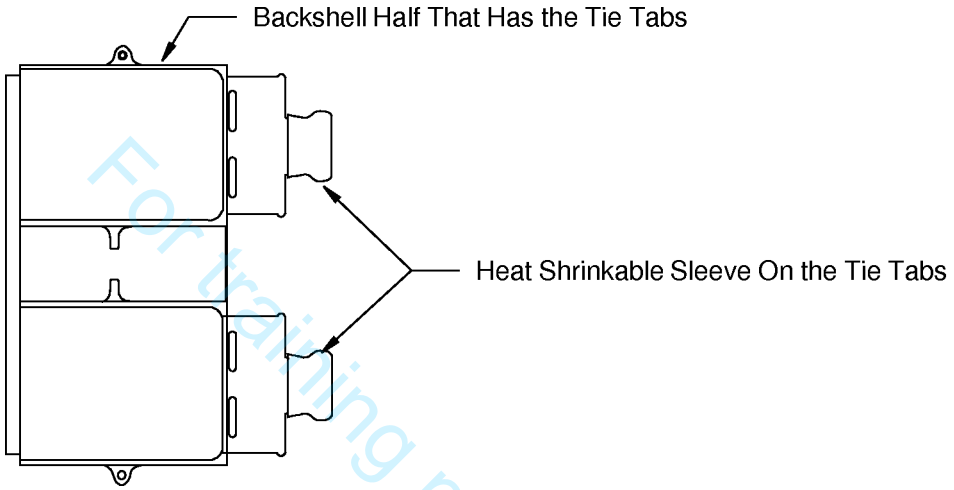

HEAT SHRINKABLE SLEEVE ON THE BACKSHELL TIE TABS
Figure 29

(9) Put the backshell half that has the tie tabs on the rear of the connector.

When you view the backshell from the rear, make sure that:

- Insert cavity A is at the top
- The backshell tie tabs are on the left side.

(10) Install the jack nut supplied with the backshell. Refer to Figure 30.

For training purposes only!

BOEING PROPRIETARY - Copyright © Unpublished Work - See title page for details

ASSEMBLY OF BACC65AA AND BACC65AB CONNECTORS

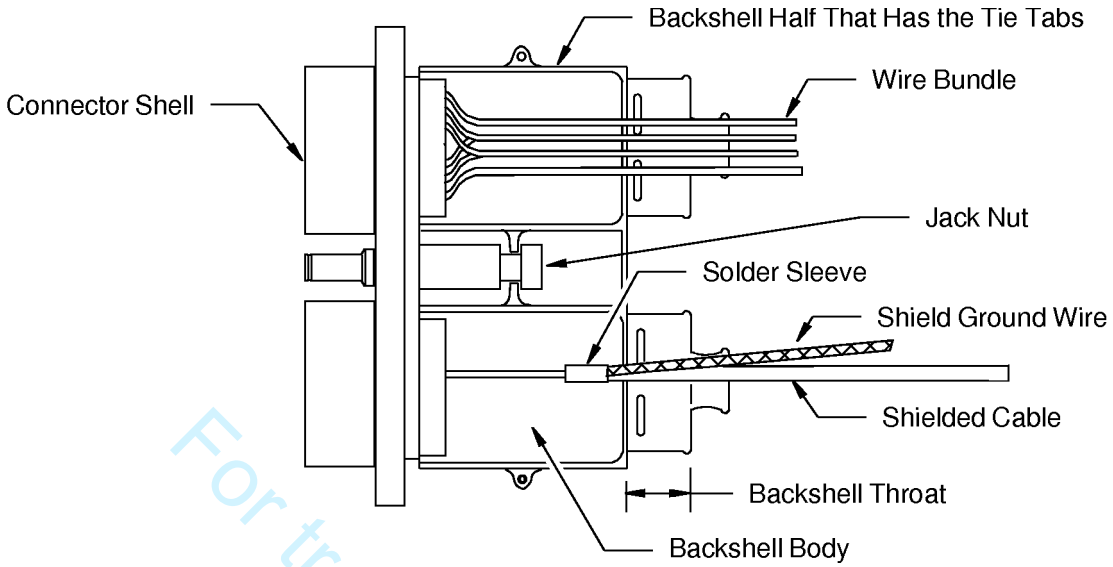

LOCATION OF THE JACK NUT
Figure 30

(11) Put the backshell half that does not have tie tabs on the assembly. Refer to Figure 31.

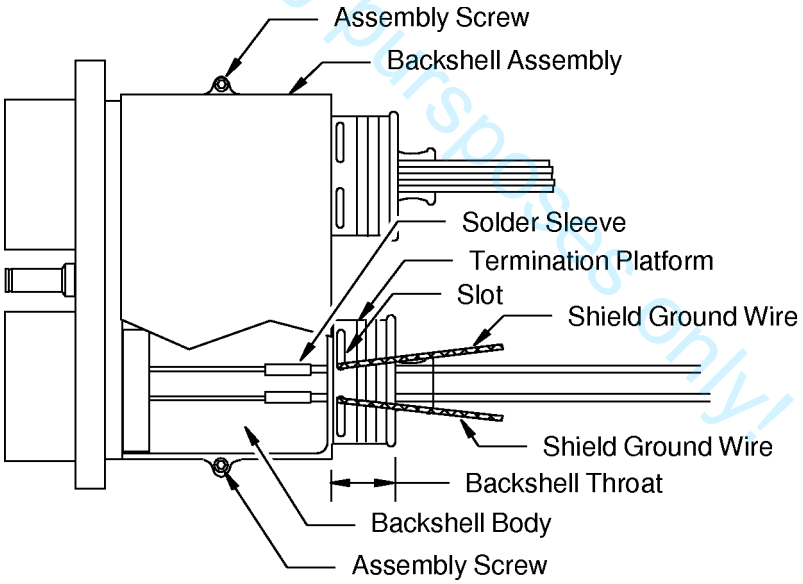

POSITION OF THE SHIELD GROUND WIRES THROUGH THE SLOTS IN THE SHIELD TERMINATION PLATFORM
Figure 31

(12) Put the ends of the shield ground wires through a slot of one of the two halves of the backshell. Refer to Figure 31.

(13) If the wire harness does not have an overall shield:

(a) Carefully pull the end of each shield ground wire to remove unwanted slack.

BOEING PROPRIETARY - Copyright © Unpublished Work - See title page for details
For training purposes only!

Make sure that the solder sleeves stay fully inside the backshell body, and are not in the throat of the backshell. Refer to Figure 31.

(b) Tighten the two assembly screws with a 3/32 inch hex wrench and torque 6 to 8 inch-pounds.

(c) Tighten the jack nut with a 1/4 inch hex wrench and torque 16 inch-pounds to 18 inch-pounds.

(d) Make sure that a shield ground wire does not make an overlap with another shield ground wire on the termination platform.

(e) Make a selection of a Shield Terminator Band from Table 24.

(f) Install the band on the termination platform.

Refer to:

- Figure 32
- Paragraph 5.AG. for the procedure to install the band.

Make sure that:

- The band buckle is located at the outside edge of the shield termination platform
- The band buckle is against the shield termination platform
- The band buckle does not make an overlap with a shield ground wire
- The band buckle does not make an overlap with a slot of the shield termination platform
- The band buckle does not make an overlap with the collar of the shield termination platform.

For training purposes only!

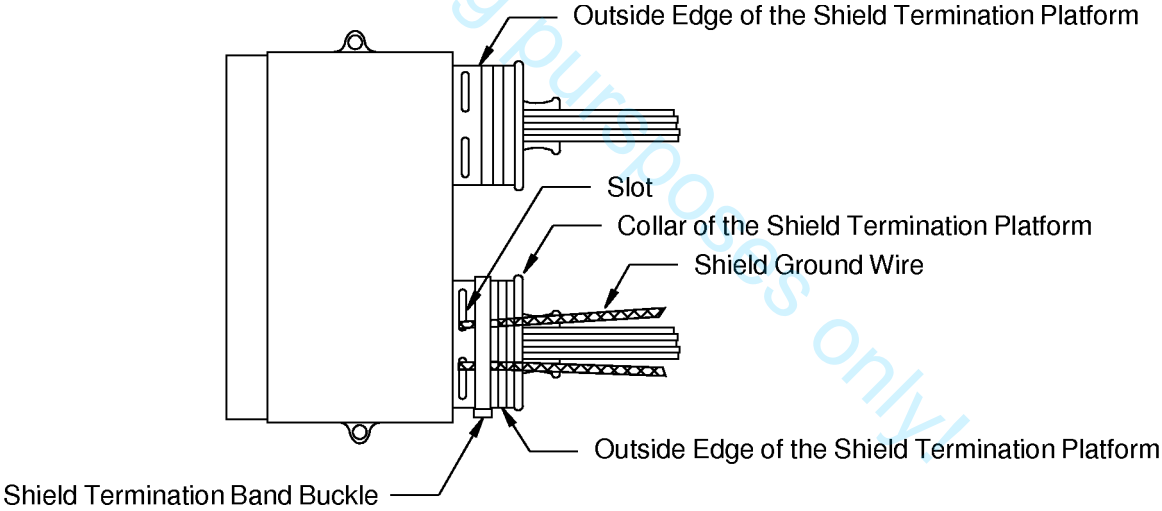

POSITION OF THE SHIELD TERMINATOR BAND ON THE SHIELD TERMINATION PLATFORM
Figure 32

(g) Remove the necessary length of from the end of the shield ground wires. Refer to Figure 33.

Make sure that the distance between the end of the shield ground wires and the cable exit is 2.50 inches +0.25 inch -0.75 inch.

BOEING PROPRIETARY - Copyright © Unpublished Work - See title page for details

ASSEMBLY OF BACC65AA AND BACC65AB CONNECTORS

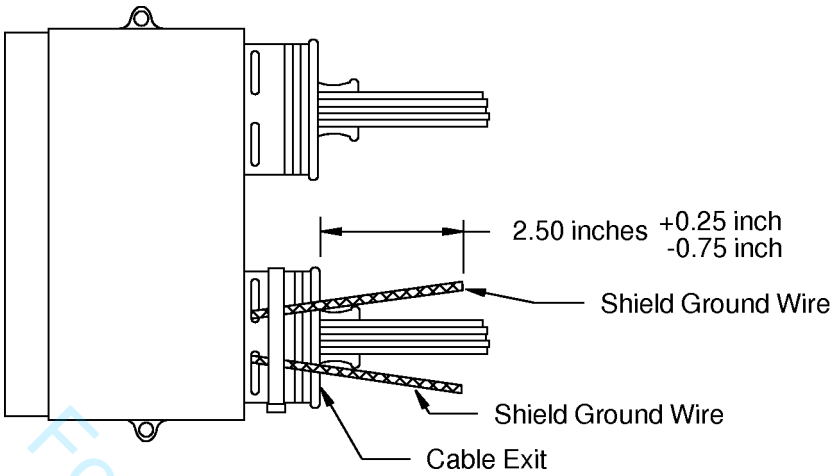

LENGTH OF THE SHIELD GROUND WIRES
Figure 33

(h) Make a selection of a Grade B, Class 1 heat shrinkable sleeve from Subject 20-00-11.

(i) Put a 3.00 inch ±0.10 inch length of the heat shrinkable sleeve over the end of each shield ground wire.

Make sure that the sleeve has the smallest diameter that can be put on the shield ground wire.

(j) Shrink the heat shrinkable sleeve on each shield ground wire.

Make sure that the heat shrinkable sleeve is not on the backshell termination platform.

Refer to:

- Figure 34
- Subject 20-10-14.

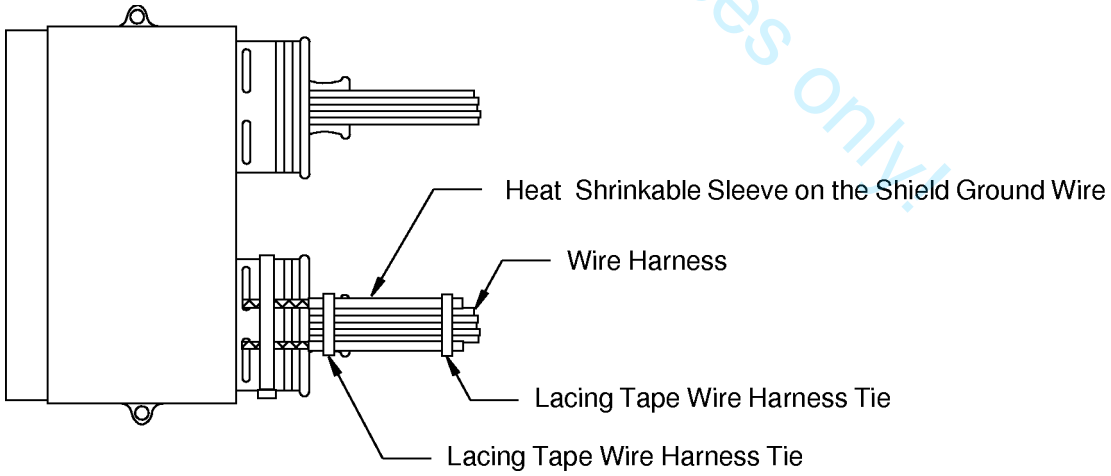

CONFIGURATION OF THE SHIELD GROUND WIRES
Figure 34

(k) Align the shield ground wires and the wire harness. Refer to Figure 34.

BOEING PROPRIETARY - Copyright © Unpublished Work - See title page for details
For training purposes only.

Make sure that a shield ground wire does not make an overlap with another shield ground wire.

(l) Assemble a lacing tape wire harness tie on the end of the shield ground wire(s) and the wire harness. Refer to Figure 34.

Make sure that the distance from the end of the shield ground wire to the wire harness tie is 0.25 inch to 0.50 inch.

(m) Assemble a lacing tape wire harness tie on the wire harness and the backshell tie tab. Refer to Figure 34.

Make sure that shield ground wires are not on the outside of the tie tab.

(n) Make a selection of a tape from Table 23.

(o) Wind three to five layers of the tape on the termination platform and the band.

(14) If the wire harness has an overall shield:

(a) Carefully pull the end of each shield ground wire until the unwanted slack is removed.

Make sure that the solder sleeves stay fully inside the backshell body, and are not inside the throat of the backshell. Refer to Figure 31.

(b) Make sure that a shield ground wire does not make an overlap with another shield ground wire on the termination platform.

(c) Remove the necessary length of from the end of the shield ground wires. Refer to Figure 35.

Make sure that the distance between the end of the shield ground wires and the cable exit is 2.50 inches +0.25 inch -0.75 inch.

For training purposes only!

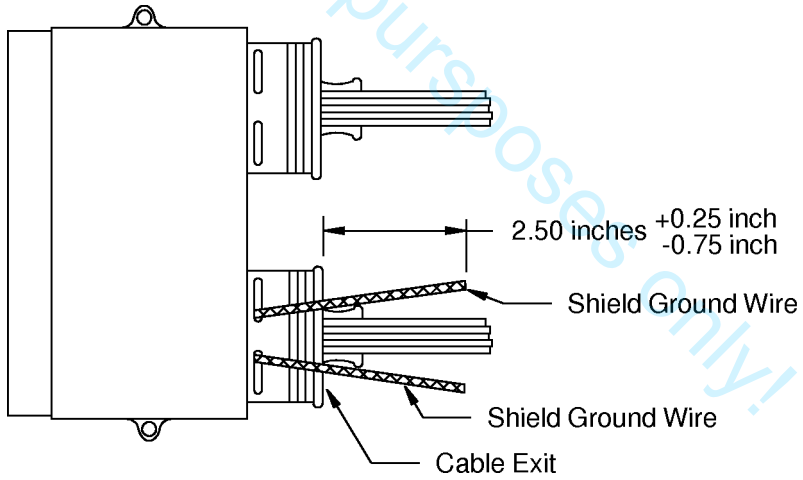

LENGTH OF THE SHIELD GROUND WIRES
Figure 35

(d) Make a selection of a Grade B, Class 1 heat shrinkable sleeve from Subject 20-00-11.

(e) Put a 3.00 inch ±0.10 inch length of the heat shrinkable sleeve over the end of each shield ground wire.

Make sure that the sleeve has the smallest diameter that can be put on the shield ground wire.

(f) Shrink the heat shrinkable sleeve on each shield ground wire.

Make sure that the heat shrinkable sleeve is not on the backshell termination platform.

BOEING PROPRIETARY - Copyright © Unpublished Work - See title page for details

ASSEMBLY OF BACC65AA AND BACC65AB CONNECTORS

Refer to:

- Figure 36
- Subject 20-10-14.

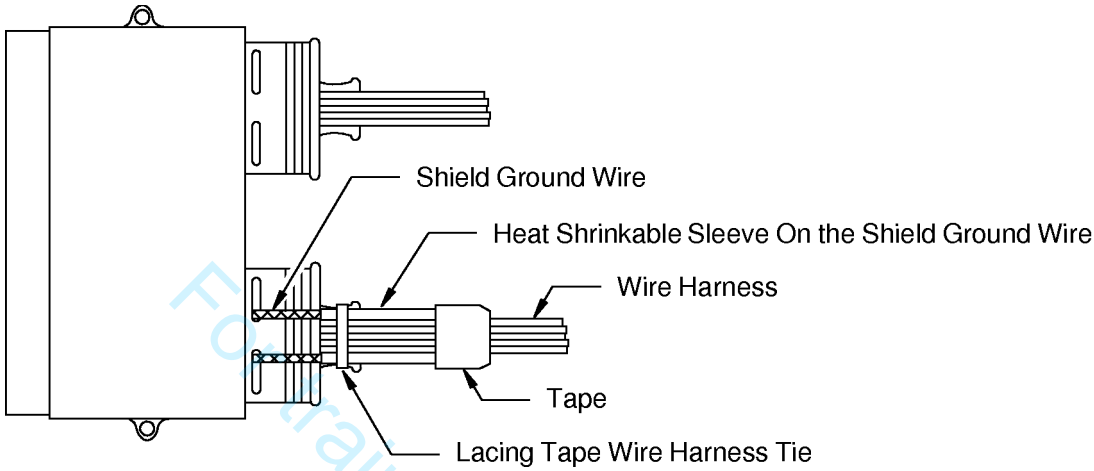

CONFIGURATION OF THE SHIELD GROUND WIRES
Figure 36

(g) Align the shield ground wires and the wire harness. Refer to Figure 36.

Make sure that a shield ground wire does not make an overlap with another shield ground wire.

(h) Make a selection of a tape from Table 23.

(i) Wind three to five layers of the tape on the wire harness and on the end(s) of the shield ground wire(s). Refer to Figure 36.

(j) Assemble a lacing tape wire harness tie on the wire harness and the backshell tie tab. Refer to Figure 36.

Make sure that shield ground wires are not on the outside of the tie tab.

(k) Put the overall shield of the wire harness on the shield termination platform on the backshell. Refer to Figure 37.

Make sure that the distance from the rear of the backshell body to the edge of the overall shield is 0.10 ± 0.03 inch.

For training purposes only!

BOEING PROPRIETARY - Copyright © Unpublished Work - See title page for details

ASSEMBLY OF BACC65AA AND BACC65AB CONNECTORS

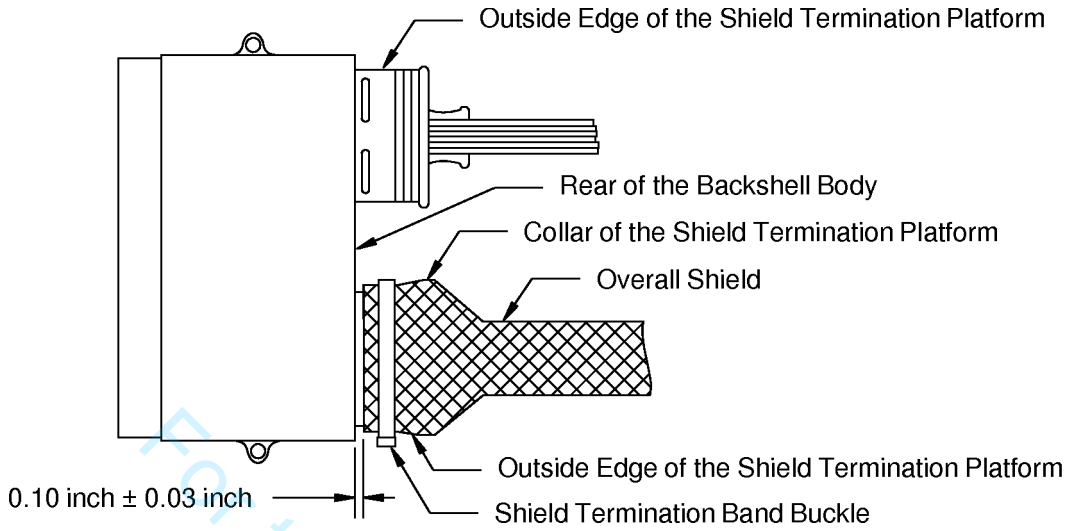

POSITION OF THE SHIELD TERMINATION BAND AND THE OVERALL SHIELD
Figure 37

(l) Make a selection of a Shield Terminator Band from Table 24.

(m) Install the band on the overall shield on the shield termination platform

Refer to:

- Figure 37
- Paragraph 5.AG. for the procedure to install the band.

Make sure that:

- The maximum distance from the rear of the backshell body to the edge of the overall shield is 0.10 inch ± 0.03 inch
- The band buckle is located at the outside edge of the shield termination platform
- The band buckle is against the shield termination platform
- The band buckle does not make an overlap with a slot of the shield termination platform
- The band buckle does not make an overlap with the collar of the shield termination platform.

(n) Make a selection of a tape from Table 23.

(o) Wind three to five layers of the tape on termination platform and the shield terminator band.

D. Glenair 527-281ML Backshell - Cable Preparation for a Solder Sleeve Shield Termination

(1) Put an approximately 3.0 inch length of the larger heat shrinkable sleeve on the wire harness.

(2) Remove 2.0 inches ±0.10 inch of the jacket from the end of the cable.

Refer to:

- Figure 38 for the cable jacket removal length
- Subject 20-00-15 for the procedure to remove the cable jacket.

For training purposes only!

BOEING PROPRIETARY - Copyright © Unpublished Work - See title page for details

ASSEMBLY OF BACC65AA AND BACC65AB CONNECTORS

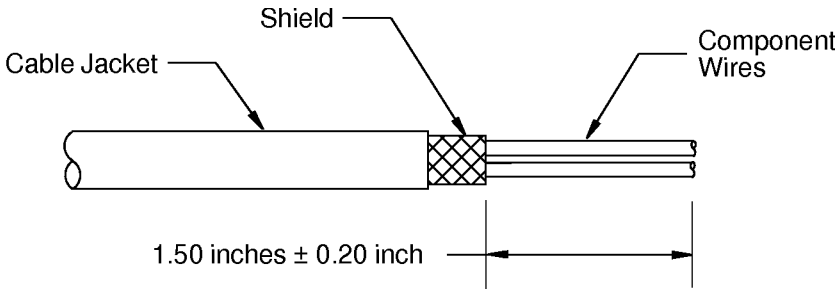

CABLE PREPARATION
Figure 38

(3) Assemble an uninsulated shield ground wire at the end of the cable jacket. Refer to Subject 20-10-15.

Make sure that the free end of the shield ground wire is pointed rearward, away from the end of the wires.

(4) Remove the necessary length from the end of each component wire to make the distance from the end of the shield to the end of the wire equal to 1.50 inches ±0.20 inch.

E. Glenair 527-281ML Backshell - Cable Preparation for a Shield Pull Through Shield Termination

(1) Put an approximately 3.0 inch length of the larger heat shrinkable sleeve on the wire harness.

(2) Remove 4.5 inches ±0.25 inch of the jacket from the end of the cable.

Refer to:

- Figure 39
- Subject 20-00-15 for the procedure to remove the cable jacket.

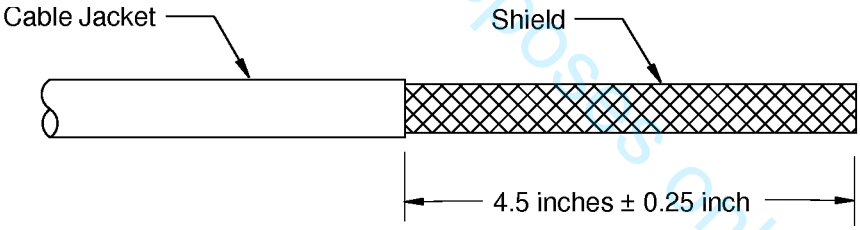

CABLE JACKET REMOVAL
Figure 39

(3) Assemble the uninsulated shield ground wire.

Refer to:

- Figure 40
- Subject 20-10-15 for the procedure to assemble the shield ground wire.

For training purposes only!

BOEING PROPRIETARY - Copyright © Unpublished Work - See title page for details

ASSEMBLY OF BACC65AA AND BACC65AB CONNECTORS

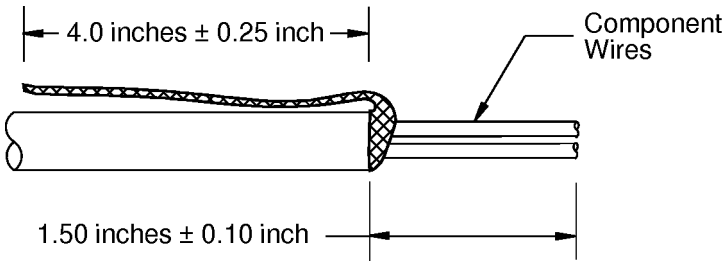

SHILED PULL THROUGH SHIELD GROUND WIRE
Figure 40

(4) Remove the necessary length from the end of the each component wire to make the distance from the end of the shield to the end of the wire equal to 1.50 inches ±0.10 inch.

F. Glenair 527-281ML Backshell - Connector Assembly Preparation

NOTE: The backshell must be put on the cable or cables before the contacts are installed in the connector insert.

(1) Put the backshell on the wire harness.

Make sure that the engaging end of the backshell is pointed forward toward the end of the wire harness.

(2) Move the backshell rearward away from the end of the wire harness.

G. Glenair 527-281ML Backshell - Backshell Assembly with Shield Ground Wires

Table 25
NECESSARY TOOLS

Tool	Type	Supplier
Screw Bit	Flat Blade	An available source
Torque Driver	Hex	An available source

(1) Make a selection of these tools from Table 25.
- A torque driver
- A screw bit.

(2) Put the shield ground wires of the applicable wire harness through the applicable slots in the shield termination platform of the backshell.

Make sure that a solder sleeve does not go through the slot.

(3) If the slot does not have sufficient space for the shield ground wires, fold the remaining shield ground wires back on the wire harness through the cable exit of the backshell.

(4) Align the forward end of the backshell and the rear of the connector shell. Refer to Figure 41.

For training purposes only!

BOEING PROPRIETARY - Copyright © Unpublished Work - See title page for details

ASSEMBLY OF BACC65AA AND BACC65AB CONNECTORS

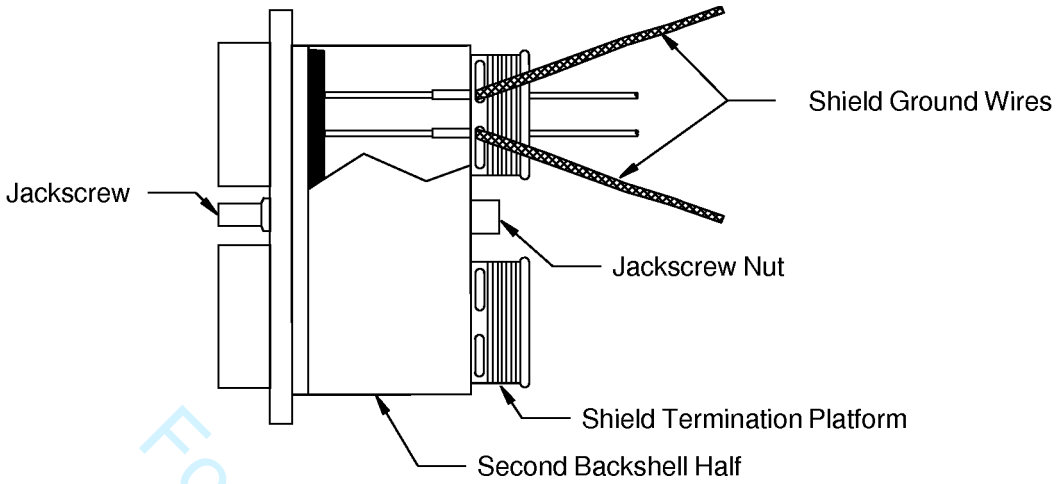

POSITION OF THE BACKSHELL ON THE CONNECTOR SHELL
Figure 41

(5) Engage the threads of the jackscrew nut and the jackscrew.

(6) Torque the jackscrew nut 16 inch-pounds to 18 inch-pounds

(7) For the shield ground wires that are in the slots

(a) Lightly pull the end of each shield ground wire in the slot.

For a solder sleeve shield termination, make sure that the solder sleeve does not go through the slot.

(b) Put the shield ground wires across the shield termination platform at approximately equal intervals around its circumference. Refer to Figure 42.

Make sure that a shield ground wire does not make an overlap with a different shield ground wire on the platform.

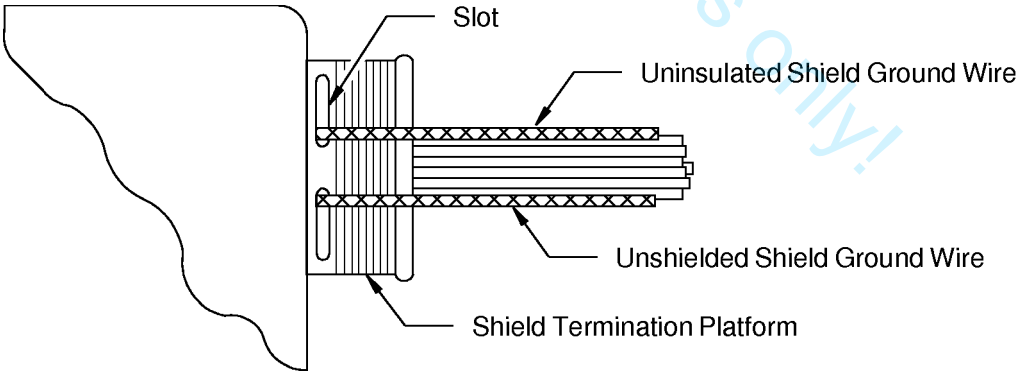

POSITION OF THE SHIELD GROUND WIRES ON THE SHIELD TERMINATION PLATFORM
Figure 42

(8) For the shield ground wires that are folded back on the wire harness:

(a) Lightly pull the end of each shield ground wire in cable exit of the backshell.

For training purposes only!

BOEING PROPRIETARY - Copyright © Unpublished Work - See title page for details

(b) Fold the shield ground wire forward across the shield termination platform between the shield ground wires that are in the slots.

Make sure that a shield ground wire does not make an overlap with a different shield ground wire on the platform.

(9) Install the shield terminator band on the shield ground wires at the rear of the slot on each shield termination platform.

Refer to:

- Figure 43 for position of the band.
- Paragraph 5.AG. for the procedure to install the band.

Make sure that:

- The buckle of the band is flat against the platform
- The buckle of the band does not make an overlap with the shield ground wires
- The buckle of the band does not make an overlap with the slots on the platform
- The buckle of the band does not make an overlap with the collar of the platform
- The shield ground wires are tight against the platform
- The distance between the rear edge of the cable exit and each shield ground wire that is folded forward is between 0.30 inch and 0.50 inch.

For training purposes only!

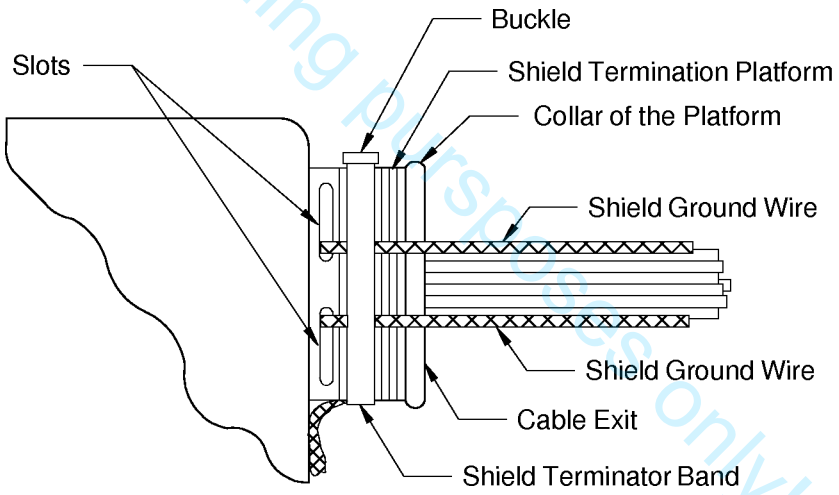

POSITION OF THE SHIELD TERMINATOR BAND ON THE SHIELD GROUND WIRES
Figure 43

(10) For the shield ground wires that are in the slots:

(a) Remove the necessary length of each shield ground wire to make the distance from the shield terminator band to the end of the shield ground wire equal to 2.5 inches ±0.10 inch.

(b) Cut a 3.00 inch ±0.10 inch length of the specified heat shrinkable sleeve for each shield ground wire.

(c) Install a heat shrinkable sleeve on each shield ground wire.

Make sure that the heat shrinkable sleeve does not make an overlap with the rear edge of the shield termination platform.

BOEING PROPRIETARY - Copyright © Unpublished Work - See title page for details

ASSEMBLY OF BACC65AA AND BACC65AB CONNECTORS

Refer to:

- Figure 44
- Subject 20-10-14 for the procedure to install the sleeve.

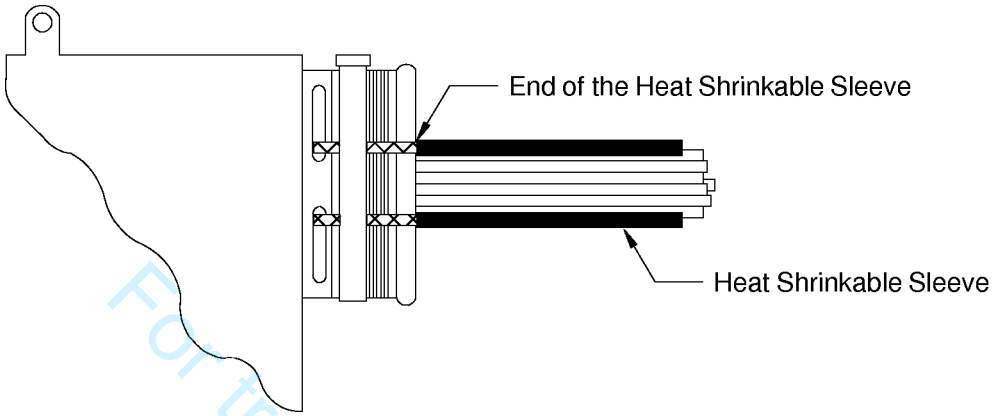

POSITION OF THE HEAT SHRINKABLE SLEEVES ON THE SHIELD GROUND WIRES
Figure 44

(11) For the shield ground wires that are folded forward across the shield termination platform, cut the end of the shield ground wire 0.10 inch ±0.05 inch from the forward edge of the shield terminator band.

(12) Put the necessary layers of the Type II silicone tape on the wire harness until the diameter of the wire harness is a small amount less than the outer diameter of the rear end of the backshell. Refer to Figure 45.

Make sure that each layer of tape:

- Starts at the rear edge of the backshell
- Extends 2.7 inches to 2.9 inches from the backshell
- Has a 50 percent overlap with the other layers
- Does not make an overlap with the backshell.

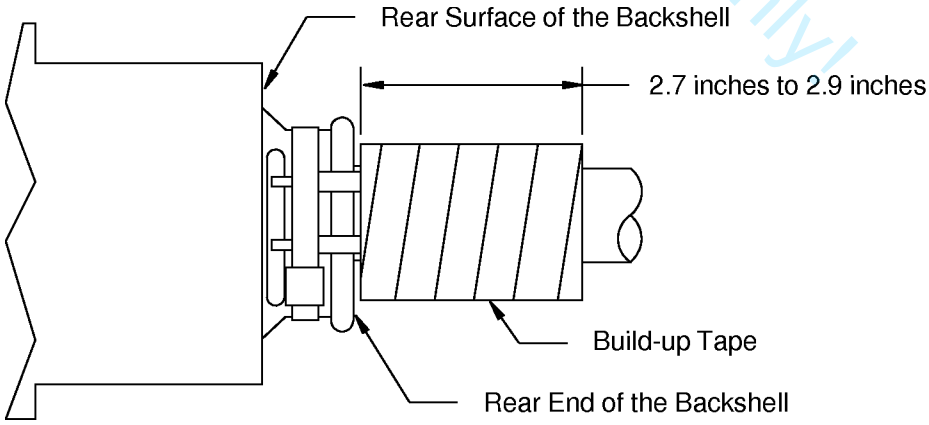

POSITION OF THE LAYER OF TAPE ON THE WIRE HARNESS
Figure 45

For training purposes only!

BOEING PROPRIETARY - Copyright © Unpublished Work - See title page for details

(13) Put 1 to 2 layers of the PTFE tape on the shield terminator band.

Make sure that:

- The center of the tape is aligned with the center of the band
- The edges of the tape are approximately aligned

(14) Put 2 to 3 layers of the Type I silicone tape on the PTFE tape.

Make sure that:

- The center of the tape is aligned with the center of the band
- The edges of the tape are approximately aligned
- The termination slots cannot be seen.

(15) Push the 3.0 inch length of heat shrinkable sleeve forward until the forward edge of the sleeve is against the rear surface of the backshell. Refer to Figure 46.

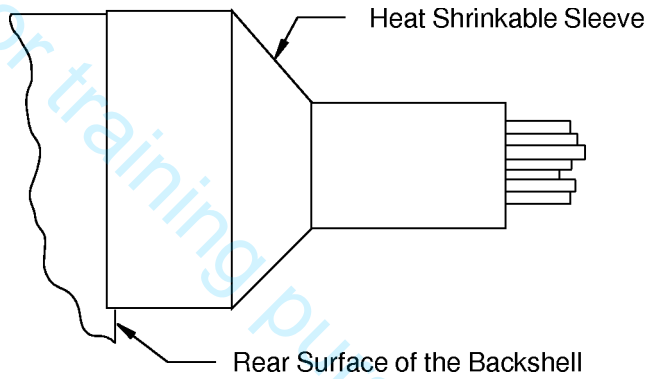

POSITION OF THE OVERALL SLEEVE ON THE BACKSHELL AND ON THE WIRE HARNESS
Figure 46

(16) Shrink the sleeve into its position. Refer to Subject 20-10-14.

H. Glenair 527-281ML Backshell - Backshell Assembly without Shield Ground Wires

Table 26
NECESSARY TOOLS

Tool	Type	Supplier
Screw Bit	Flat Blade	An available source
Torque Driver	Hex	An available source

(1) Make a selection of these tools from Table 26.

- A torque driver
- A screw bit.

(2) Put an approximately 3.0 inch length of the heat shrinkable sleeve on the wire harness.

(3) Align the forward end of the backshell and the rear of the connector shell. Refer to Figure 47.

For training purposes only!

BOEING PROPRIETARY - Copyright © Unpublished Work - See title page for details

ASSEMBLY OF BACC65AA AND BACC65AB CONNECTORS

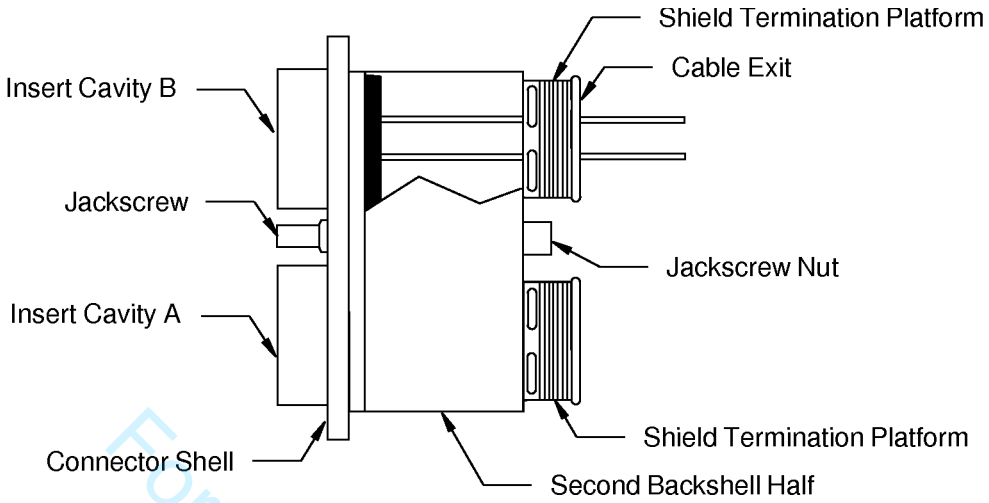

POSITION OF THE BACKSHELL ON THE CONNECTOR SHELL
Figure 47

(4) Engage the threads of the jackscrew nut and the jackscrew.

(5) Torque the jackscrew nut 16 inch-pounds to 18 inch-pounds.

(6) Put the necessary layers of the Type II silicone tape on the wire harness until the diameter of the wire harness is a small amount less than the outer diameter of the rear end of the backshell. Refer to Figure 48.

Make sure that each layer of tape:

- Starts at the rear edge of the backshell
- Extends 2.7 inches to 2.9 inches from the backshell
- Has a 50 percent overlap with the other layers
- Does not make an overlap with the backshell

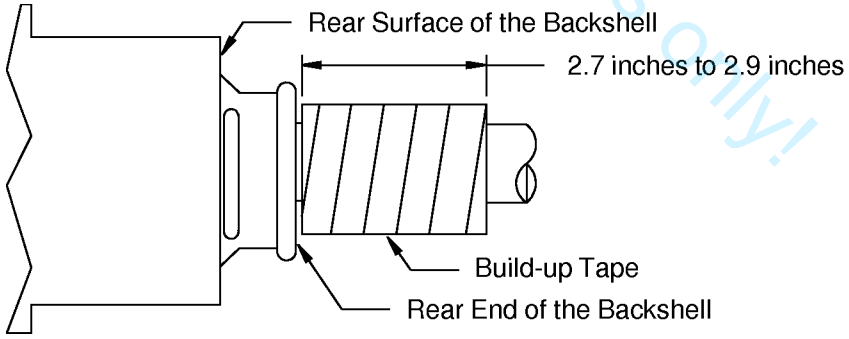

POSITION OF THE LAYER OF TAPE ON THE WIRE HARNESS
Figure 48

(7) Put 1.5 to 2 layers of the Type I silicone tape on the shield termination platform.

For training purposes only!

BOEING PROPRIETARY - Copyright © Unpublished Work - See title page for details

Make sure that:

- The center of the tape is aligned with the center of the shield termination platform
- The edges of the tape are approximately aligned.

(8) Push the 3.0 inch length of heat shrinkable sleeve forward until the forward edge of the sleeve is against the rear surface of the backshell.

(9) Shrink the sleeve into its position. Refer to Subject 20-10-14.

I. Radiall 617925062 Backshell - Cable Preparation for a Solder Sleeve Shield Termination

(1) Put the specified solder sleeve on the cable.

Make sure that the shield ground wire is pointed rearward away from the end of the cable.

(2) Remove 2.0 inches ±0.1 inch of the jacket from the end of the cable.

Refer to:

- Figure 49
- Subject 20-00-15 for the procedure to remove the cable jacket.

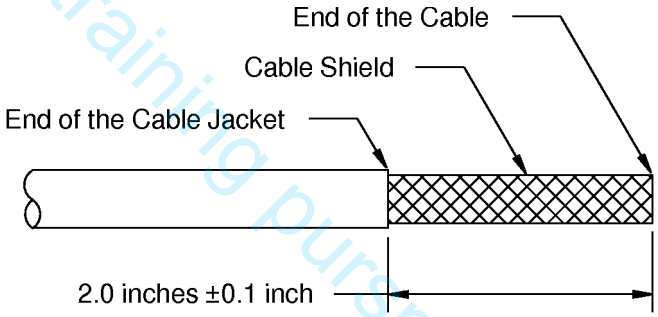

CABLE JACKET REMOVAL
Figure 49

(3) Assemble an uninsulated shield ground wire at the end of the cable jacket. Refer to Subject 20-10-15

(4) Remove the necessary length from the end of each component wire to make the distance from the end of the shield to the end of the wire equal to 1.5 inches ±0.2 inch. Refer to Figure

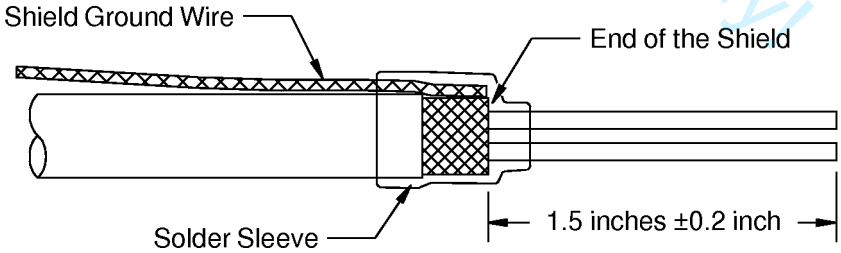

LENGTH OF THE COMPONENT WIRES
Figure 50

J. Radiall 617925062 Backshell - Cable Preparation for a Shield Pull Through Shield Termination

(1) Remove 4.50 inches ±0.25 inch of the jacket from the end of the cable.

For training purposes only!

BOEING PROPRIETARY - Copyright © Unpublished Work - See title page for details

ASSEMBLY OF BACC65AA AND BACC65AB CONNECTORS

Refer to:

- Figure 51
- Subject 20-00-15 for the procedure to remove the cable jacket.

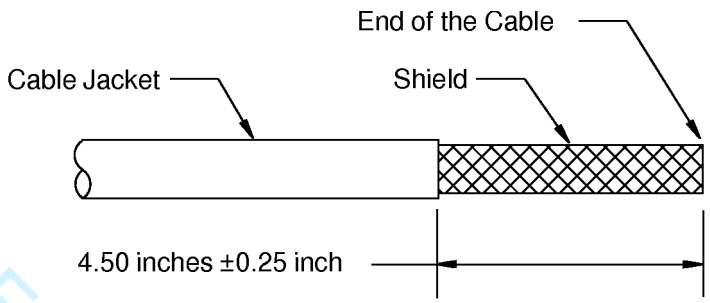

CABLE JACKET REMOVAL
Figure 51

(2) Assemble the shield pull through shield ground wire. Refer to Subject 20-10-15.

(3) Remove the necessary length from the end of the each component wire to make the distance from the end of the shield to the end of the wire equal to 1.5 inches ±0.1 inch. Refer to Figure 52.

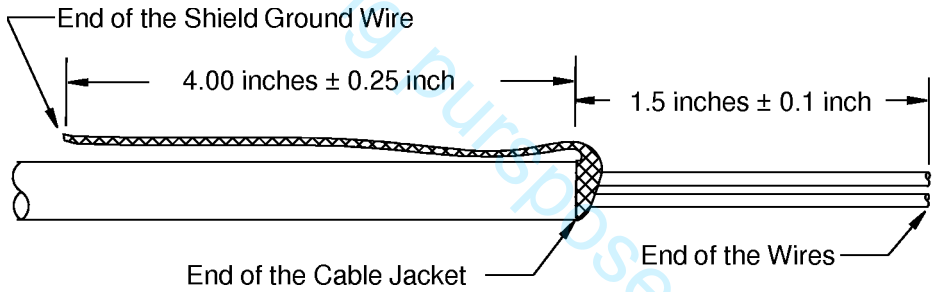

LENGTH OF THE COMPONENT WIRES
Figure 52

For training purposes only!

K. Radiall 617925062 Backshell - Backshell Assembly with Shield Ground Wires

This section gives the procedure to assemble the Radiall 617925062 backshell with a cable that has shield terminator band shield terminations.

For the procedure to assemble the Radiall 617925062 backshell with a cable that does not have shield terminator band shield terminations, refer to Paragraph 5.L..

Table 27
NECESSARY TOOLS

Tool	Size (inch)	Supplier
Screw Bit, Hex	5/64	An available source
	5/16	An available source
Screwdriver, Hex	5/64	An available source

BOEING PROPRIETARY - Copyright © Unpublished Work - See title page for details

ASSEMBLY OF BACC65AA AND BACC65AB CONNECTORS

Table 27 (continued)

Tool	Size (inch)	Supplier
-	5/16	An available source
Torque Tool, Hex	-	An available source

(1) Make a selection of these tools from Table 27.
- A 5/64 hex screw bit
- A 5/16 hex screw bit
- A 5/64 hex screwdriver
- A 5/16 hex screwdriver
- A hex torque tool.

(2) Put a strain relief grommet in the applicable cable exit of the bottom half of the backshell. Refer to Figure 53.

Make sure that the slit in the grommet is on top.

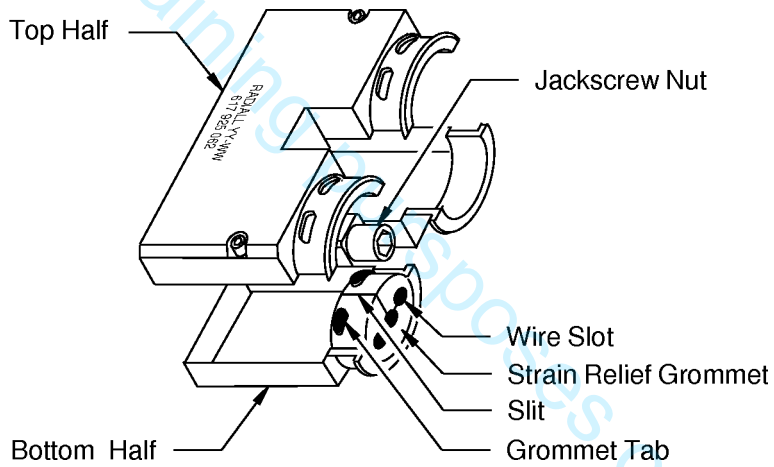

POSITION OF THE STRAIN RELIEF GROMMET IN THE BACKSHELL HALF
Figure 53

(3) Put the forward end of the backshell against the rear of the connector shell.

(4) Carefully push each wire through the slit of the grommet and into the applicable wire slot in the grommet.

Make sure that lateral force is not applied to the contact assembly in the insert.

CAUTION: IF TOO MUCH LATERAL FORCE IS APPLIED TO A CONTACT ASSEMBLY IN THE INSERT, DAMAGE TO THE INSERT CAN OCCUR.

(5) Engage the jackscrew nut of the backshell and the jackscrew of the connector shell. Refer to Figure 54.

For training purposes only!

BOEING PROPRIETARY - Copyright © Unpublished Work - See title page for details

ASSEMBLY OF BACC65AA AND BACC65AB CONNECTORS

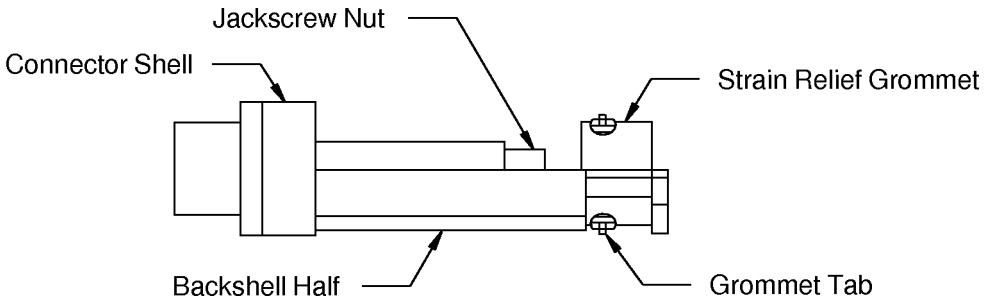

POSITION OF THE BOTTOM HALF OF THE BACKSHELL ON THE CONNECTOR SHELL
Figure 54

(6) Tighten the jackscrew nut a small amount with a screwdriver.

(7) Torque the jackscrew nut 9 inch-pounds to 12 inch-pounds.

(8) Put the shield ground wires of the cables of the wire harness in the applicable slots in the shield termination platform.

For a solder sleeve shield termination, make sure that the solder sleeve does not go through the slot.

(9) If the slot does not have sufficient space for the shield ground wires, fold the remaining shield ground wires back on the wire harness through the cable exit of the backshell.

(10) For the shield ground wires that are in the slots:

(a) Lightly pull the end of each shield ground wire in the slot.

For a solder sleeve shield termination, make sure that the solder sleeve does not go through the slot.

(b) Put the shield ground wires across the shield termination platform at approximately equal intervals around its circumference. Refer to Figure 55.

Make sure that a shield ground wire does not make an overlap with a different shield ground wire on the platform.

For training purposes only!

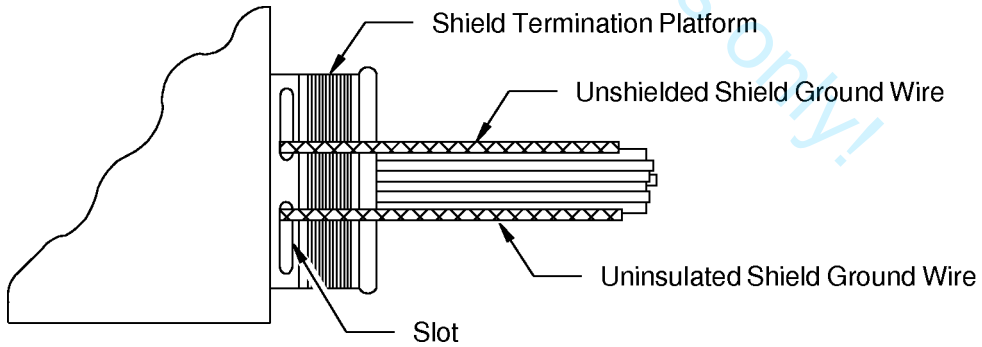

POSITION OF THE SHIELD GROUND WIRES ON THE SHIELD TERMINATION PLATFORM
Figure 55

(11) For the shield ground wires that are folded back on the wire harness:

(a) Lightly pull the end of each shield ground wire in cable exit of the backshell.

(b) Fold the shield ground wire forward across the shield termination platform between the shield ground wires that are in the slots.

BOEING PROPRIETARY - Copyright © Unpublished Work - See title page for details

Make sure that a shield ground wire does not make an overlap with a different shield ground wire on the platform.

(12) Put the top half of the backshell on the bottom half. Refer to Figure 56.

Make sure that each grommet tab of the strain relief grommet is in the applicable hole of the shield termination platform.

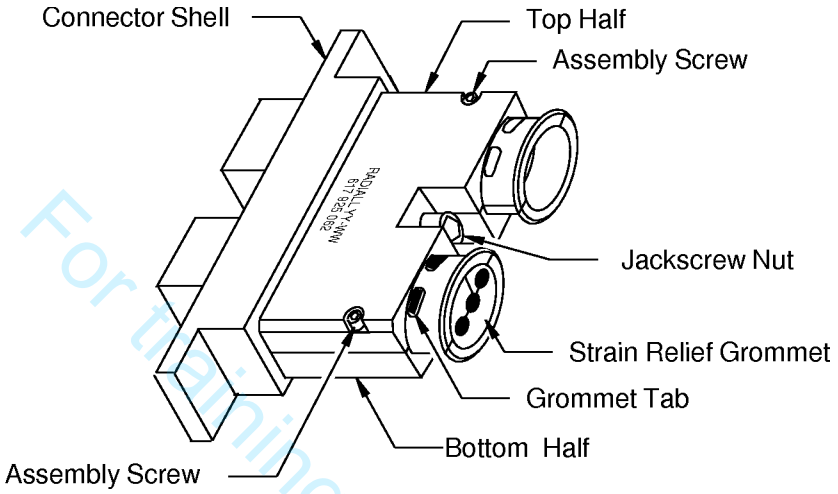

POSITION OF THE TOP HALF OF THE BACKSHELL ON THE ASSEMBLY
Figure 56

(13) Engage the threads of each assembly screw and the hole in the backshell half.

(14) Torque each of the assembly screw 6 inch-pounds to 8 inch-pounds.

(15) Install the shield terminator band on the shield ground wires at the rear of the slot on the shield termination platform.

Refer to:

- Figure 57 for position of the band
- Paragraph 5.AG. for the procedure to install the band.

Make sure that:

- The buckle of the band is flat against the platform
- The buckle of the band does not make an overlap with the shield ground wires
- The buckle of the band does not make an overlap with the slots on the platform
- The buckle of the band does not make an overlap with the collar of the platform
- The shield ground wires are tight against the platform
- The distance between the rear edge of the cable exit and each shield ground wire that is folded forward is between 0.3 inch and 0.5 inch.

For training purposes only!

BOEING PROPRIETARY - Copyright © Unpublished Work - See title page for details

ASSEMBLY OF BACC65AA AND BACC65AB CONNECTORS

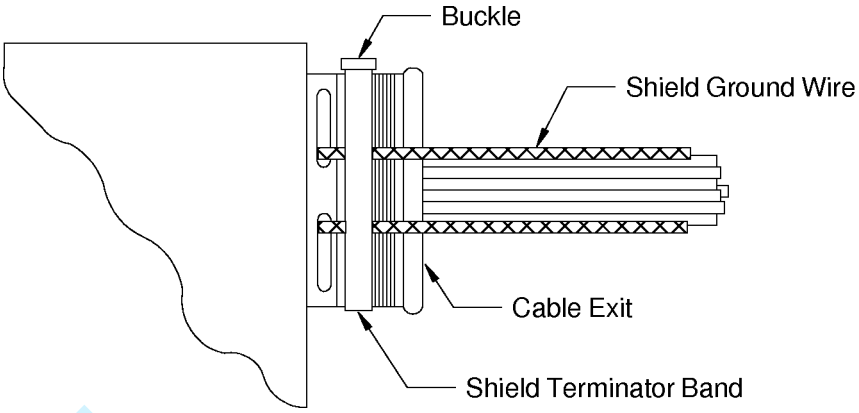

POSITION OF THE SHIELD TERMINATOR BAND ON THE SHIELD GROUND WIRES
Figure 57

(16) For the shield ground wires that are in the slots, remove the necessary length from each shield ground wire to make the distance from the cable exit to the end of the shield ground wire equal to 1.5 inches ±0.1 inch. Refer to Figure 58.

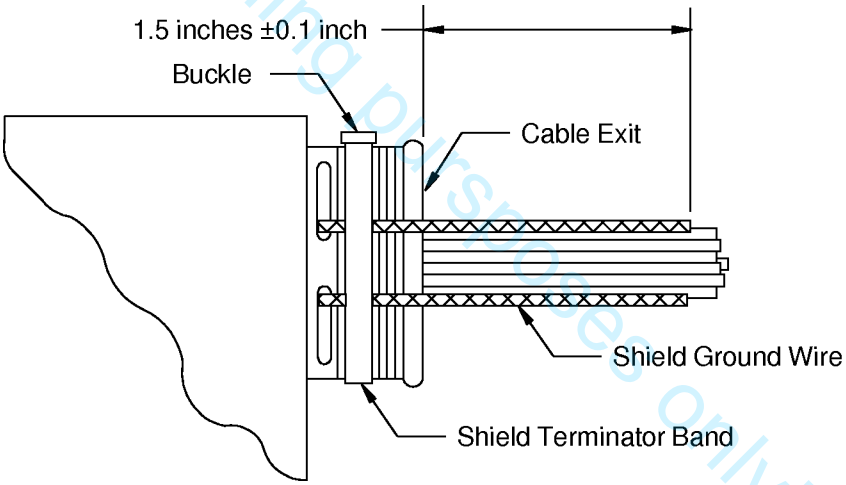

LENGTH OF THE SHIELD GROUND WIRES
Figure 58

(17) For the shield ground wires that are folded forward across the shield termination platform, cut the end of the shield ground wire 0.10 inch ±0.05 inch from the forward edge of the shield terminator band.

(18) Put the necessary layers of Type I silicone tape on the wire harness and the shield ground wires at the rear of the cable exit. Refer to Figure 59.

For training purposes only!

BOEING PROPRIETARY - Copyright © Unpublished Work - See title page for details

Make sure that:

- The layers of tape make an approximately 100 percent overlap
- If the O.D. of the wire harness is equal to or larger than 75 percent of the O.D. of the cable exit, a minimum of two layers of tape are put on
- If the O.D. of the wire harness is smaller than 75 percent of the O.D. of the cable exit, the necessary layers of tape are put on to make the O.D. of the wire harness approximately equal to 75 percent of the O.D. of the cable exit.

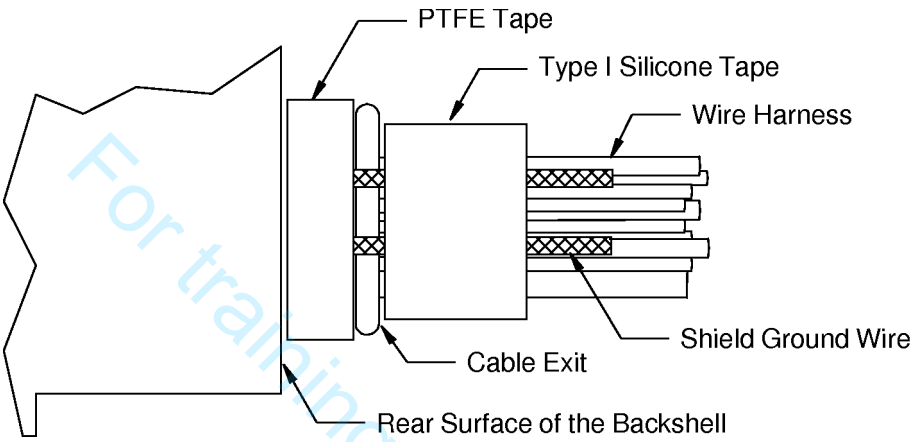

POSITION OF THE TAPE ON THE WIRE HARNESS
Figure 59

(19) Put 1 to 2 layers of PTFE tape on the shield terminator band.

Make sure that:

- The center of the tape and the center of the band are approximately aligned
- The edges of the tape are approximately aligned.

(20) Put a layer of Type II silicone tape on the wire harness and the shield ground wires. Refer to Figure 60.

Make sure that the layer of tape:

- Starts approximately 0.25 inch rearward from the end of the longest shield ground wire
- Ends at the rear surface of the backshell
- Makes approximately a 50 percent overlap.

For training purposes only!

BOEING PROPRIETARY - Copyright © Unpublished Work - See title page for details

ASSEMBLY OF BACC65AA AND BACC65AB CONNECTORS

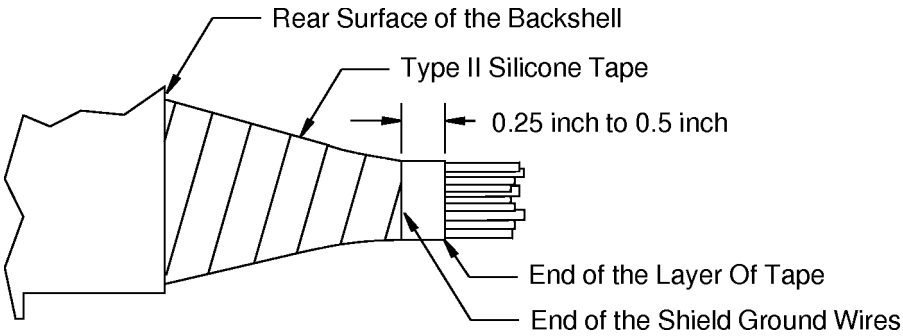

POSITION OF THE TAPE ON THE WIRE HARNESS
Figure 60

(21) Put a second layer of Type II silicone tape on the first layer of tape. Refer to Figure 60.

Make sure that the layer of tape:

- Starts at the rear surface of the backshell
- Extends 0.25 inch to 0.5 inch farther than the longest shield ground wire
- Makes approximately a 50 percent overlap
- At the rear end, makes approximately a 100 percent overlap.

L. Radiall 617925062 Backshell - Backshell Assembly without Shield Ground Wires

Table 28
NECESSARY TOOLS

Tool	Type (inch)	Supplier
Screw Bit, Hex	5/64	An available source
	5/16	An available source
Screwdriver, Hex	5/64	An available source
	5/16	An available source
Torque Tool, Hex	-	An available source

(1) Make a selection of these tools from Table 28.

- A 5/64 hex screw bit
- A 5/16 hex screw bit
- A 5/64 hex screwdriver
- A 5/16 hex screwdriver
- A hex torque tool.

(2) Put a strain relief grommet in the applicable cable exit of the bottom half of the backshell. Refer to Figure 61.

Make sure that the slit in the grommet is on top.

For training purposes only!

BOEING PROPRIETARY - Copyright © Unpublished Work - See title page for details

ASSEMBLY OF BACC65AA AND BACC65AB CONNECTORS

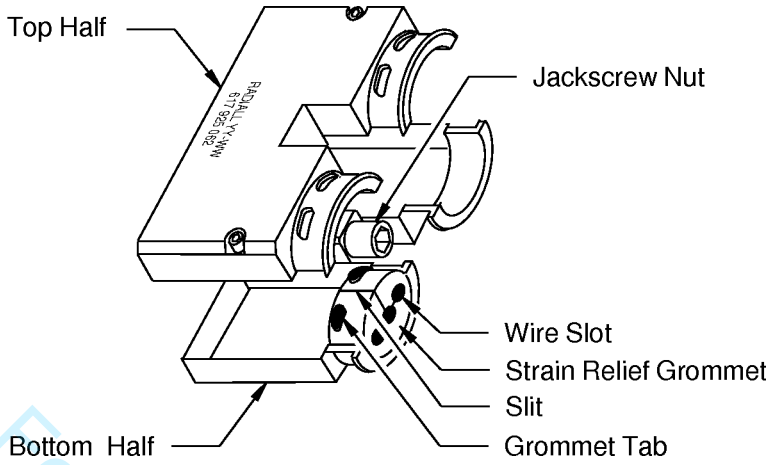

POSITION OF THE STRAIN RELIEF GROMMET IN THE BACKSHELL HALF
Figure 61

(3) Put the forward end of the backshell against the rear of the connector shell.

(4) Carefully push each wire through the slit of the grommet and into the applicable wire slot in the grommet.

Make sure that lateral force is not applied to the contact assembly in the insert.

CAUTION: IF TOO MUCH LATERAL FORCE IS APPLIED TO A CONTACT ASSEMBLY IN THE INSERT, DAMAGE TO THE INSERT CAN OCCUR.

(5) Engage the jackscrew nut of the backshell and the jackscrew of the connector shell. Refer to Figure 62.

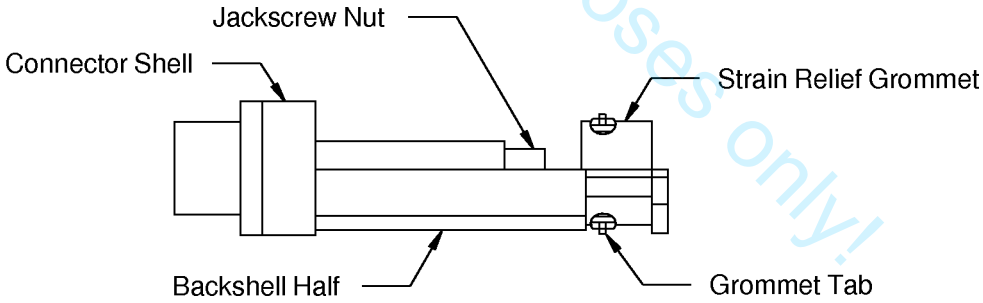

POSITION OF THE BOTTOM HALF OF THE BACKSHELL ON THE CONNECTOR SHELL
Figure 62

(6) Tighten the jackscrew nut a small amount with a screwdriver.

(7) Torque the jackscrew nut 9 inch-pounds to 12 inch-pounds.

(8) Put the top half of the backshell on the bottom half. Refer to Figure 63.

Make sure that each grommet tab of the strain relief grommet is in the applicable hole of the shield termination platform.

For training purposes only!

BOEING PROPRIETARY - Copyright © Unpublished Work - See title page for details

ASSEMBLY OF BACC65AA AND BACC65AB CONNECTORS

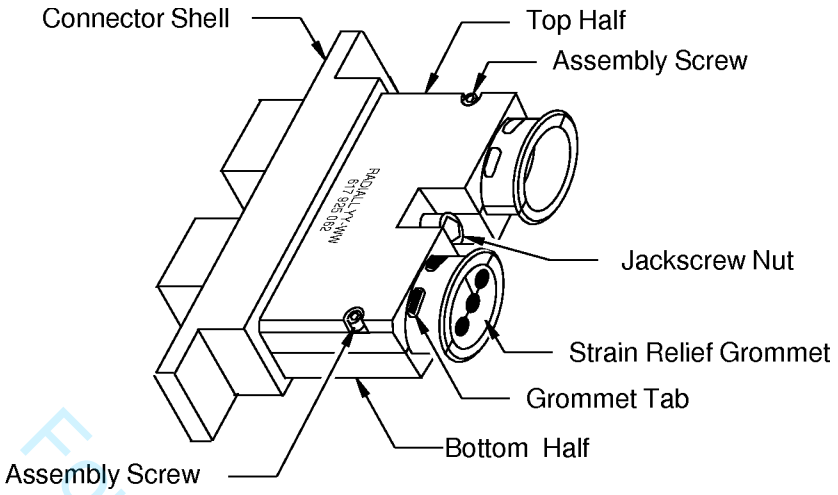

POSITION OF THE TOP HALF OF THE BACKSHELL ON THE ASSEMBLY
Figure 63

(9) Engage the threads of each assembly screw and the hole in the backshell half.

(10) Torque each of the assembly screw 6 inch-pounds to 8 inch-pounds.

(11) Put the necessary layers of Type I silicone tape on the wire harness at the rear of the cable exit. Refer to Figure 64.

Make sure that:

- The layers of tape make an approximately 100 percent overlap
- If the O.D. of the wire harness is equal to or larger than 75 percent of the O.D. of the cable exit, a minimum of two layers of tape are put on
- If the O.D. of the wire harness is smaller than 75 percent of the O.D. of the cable exit, the necessary layers of tape are put on to make the O.D. of the wire harness approximately equal to 75 percent of the O.D. of the cable exit.

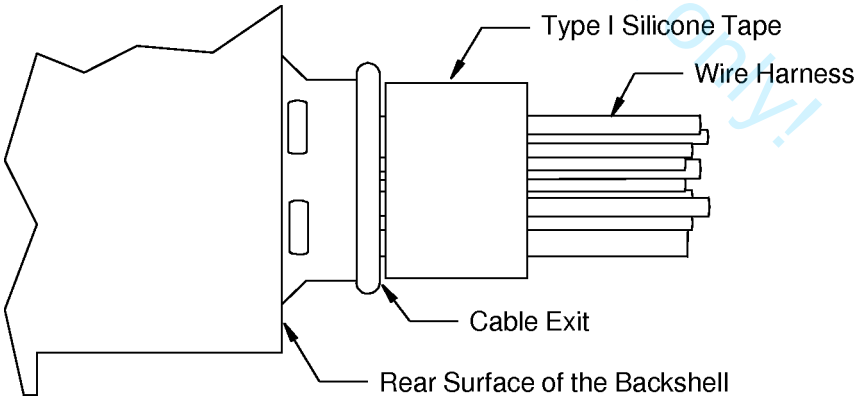

POSITION OF THE LAYER OF TAPE ON THE WIRE HARNESS
Figure 64

(12) Put a layer of Type II silicone tape on the wire harness. Refer to Figure 65.

For training purposes only!

BOEING PROPRIETARY - Copyright © Unpublished Work - See title page for details

Make sure that the layer of tape:

- Starts approximately 2 inches rearward from the cable exit of the backshell
- Ends at the rear surface of the backshell
- Makes approximately a 50 percent overlap.

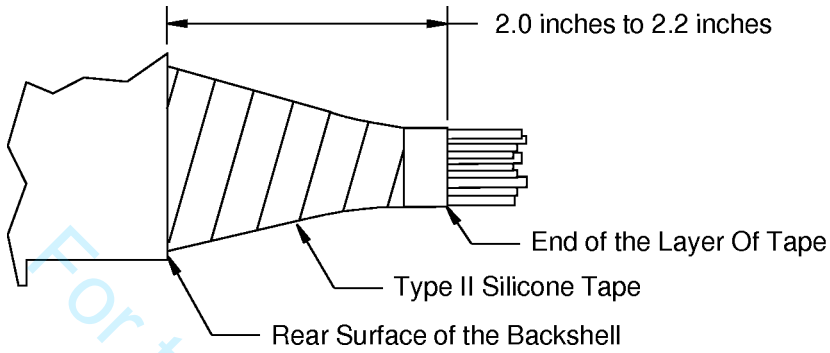

POSITION OF THE TAPE ON THE WIRE HARNESS
Figure 65

(13) Put a second layer of Type II silicone tape on the first layer of tape. Refer to Figure 65.

Make sure that the layer of tape:

- Starts at the rear surface of the backshell
- Extends 2.0 inches to 2.2 inches rearward
- Makes approximately a 50 percent overlap
- At the rear end, makes approximately a 100 percent overlap.

M. Shield Ground Wire Assembly

This paragraph gives the procedure to assemble a shield ground wire and a contact for installation in:

- The connector ground block
- The connector insert.

For the procedure to assemble the shield ground wires for:

- Raychem 55A6160-() cable, refer to Paragraph 5.N.
- BMS13-60 Type 27 Class 1 wire, refer to Paragraph 5.O.

(1) Remove 2.5 inches ±0.1 inch of the cable jacket from the end of the cable. Refer to Figure 66.

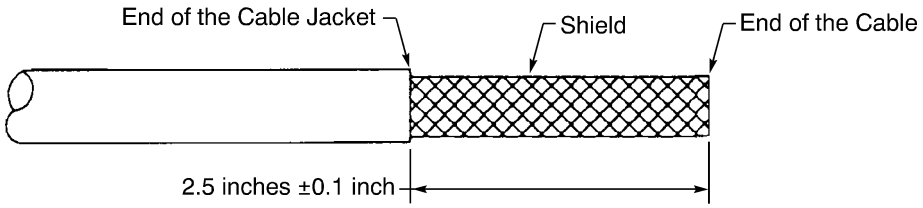

CABLE JACKET REMOVAL
Figure 66

For training purposes only!

BOEING PROPRIETARY - Copyright © Unpublished Work - See title page for details

(2) Assemble an insulated shield ground wire. Refer to Subject 20-10-15.

NOTE: The shield ground wire must have the same size as the crimp barrel of the specified contact. Refer to:

- Table 3 for the ground block contact
- Subject 20-74-02 for the insert contact.

Make sure that:

- The shield ground wire assembly components are applicable for the shield material of the wire
- The length of the shield ground wire is 2.5 inches minimum
- The free end of the shield ground wire is pointed forward to the end of the cable.

CAUTION: A SHIELD GROUND WIRE ASSEMBLY WITH A SOLDER SLEEVE IS NOT APPLICABLE FOR A CABLE OR A WIRE WITH A SHIELD THAT HAS NICKEL PLATED CONDUCTORS. UNSATISFACTORY PERFORMANCE OF THE SHIELD TERMINATION CAN OCCUR.

(3) Remove the unwanted length from the end of the shield ground wire and the wires of the cable. Refer to Figure 67.

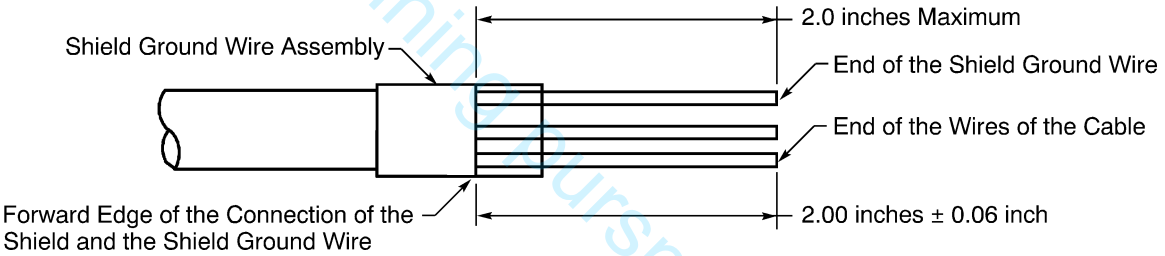

LENGTH OF THE SHIELD GROUND WIRE AND THE WIRES OF THE CABLE
Figure 67

NOTE: The connection of the shield and the shield ground wire can be:

- The melted solder ring of a solder sleeve
- A mechanical ferrule
- An RSK Shield-Kon.

(a) Remove the necessary length from the end of the shield ground wire to make the distance from the forward edge of the connection to the end of the shield ground wire equal to 2.0 inches maximum.

(b) Remove the necessary length from the end of the each wire of the cable to make the distance from the forward edge of the connection to the end of the wire equal to 2.00 inches ±0.06 inch.

(4) Assemble the specified contact on the end of the shield ground wire.

For the assembly of:

- A ground block contact, refer to Paragraph 5.Q.
- An insert contact, refer to Paragraph 5.P.

For training purposes only!

BOEING PROPRIETARY - Copyright © Unpublished Work - See title page for details

ASSEMBLY OF BACC65AA AND BACC65AB CONNECTORS

N. Shield Ground Wire Assembly for Raychem 55A6160-() Cable

This paragraph gives the procedure to assemble the shield ground wires and contacts for installation in:

- The connector ground block
- The connector insert.

For the procedure to assemble the shield ground wires for:

- Wire or cable that has one shield, refer to Paragraph 5.M.
- BMS13-60 Type 27 Class 1 wire, refer to Paragraph 5.O.

Table 29
NECESSARY PARTS

Part	Boeing Standard	Shield Ground Wire Size (AWG)
Solder Sleeve with an integral wire	BACS13CT3C	20

(1) Make a selection of a solder sleeve with an integral wire from Table 29.

NOTE: Two solder sleeves are necessary.

Refer to Subject 20-10-15 for approved suppliers of Boeing standard solder sleeves.

(2) Prepare the cable for termination of the outer shield. Refer to Figure 68 and Subject 20-00-15.

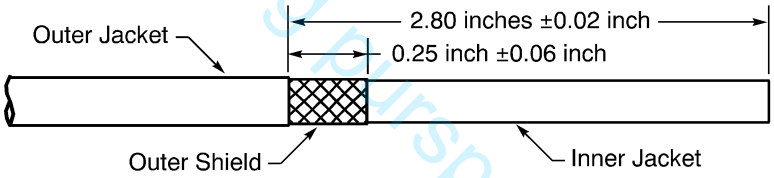

OUTER JACKET AND OUTER SHIELD REMOVAL
Figure 68

(a) Remove 2.80 inches ±0.02 inch of the outer jacket from the end of the cable.

(b) Remove the necessary length of the shield to make the distance from the end of the jacket to the end of the shield equal to 0.25 inch ±0.06 inch.

(3) Assemble the shield ground wire of the outer shield. Refer to Figure 69.

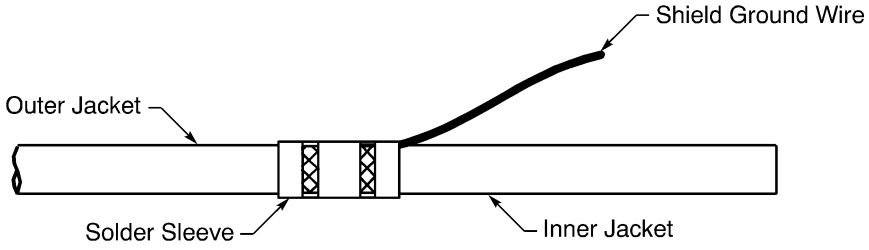

TERMINATION OF THE OUTER SHIELD
Figure 69

(a) Put the solder sleeve on the wire or cable.

BOEING PROPRIETARY - Copyright © Unpublished Work - See title page for details
For training purposes only!

Make sure that:

- The free end of the shield ground wire is pointed forward to the end of the cable
- The large end of the solder sleeve is put on the wire or cable first
- The inner edge of the rear seal ring is aligned with the end of the outer jacket.

(b) Shrink the solder sleeve into its position.

Make sure that:

- The solder sleeve stays in the correct position
- A minimum of 75 percent of the indicator ring on top of the solder ring is melted.

(c) Remove the necessary length of the shield ground wire to make the distance from the forward edge of the solder ring to the end of the wire equal to 2.0 inches maximum.

(4) Prepare the cable for termination of the inner shield. Refer to Figure 70 and Subject 20-00-15.

For training purposes only!

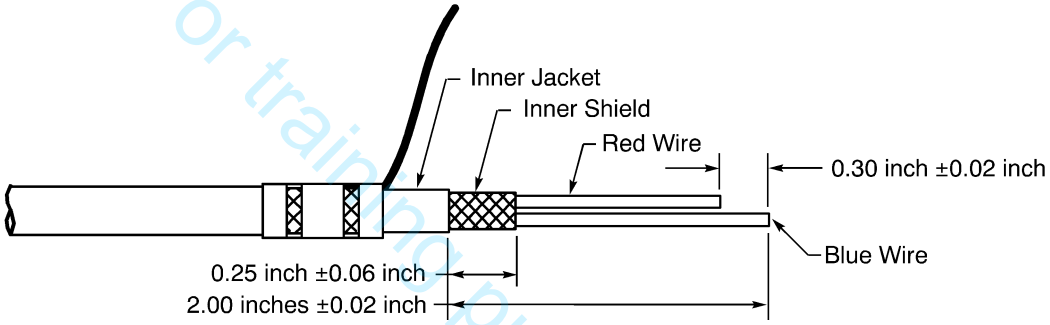

INNER JACKET AND INNER SHIELD REMOVAL
Figure 70

(a) Remove 2.00 inches ±0.02 inch of the inner jacket from the end of the cable.

(b) Remove the necessary length of the inner shield to make the distance from the end of the shield to the end of the jacket equal to 0.25 inch ±0.06 inch.

(c) Remove the necessary length of the red wire to make the distance from the end of the red wire to the end of the blue wire equal to 0.30 inch ±0.02 inch.

(d) Remove 0.21 inch ±0.02 inch of insulation from the end of the blue wire. Refer to Subject 20-00-15.

(5) Assemble the shield ground wire of the inner shield. Refer to Figure 71.

Make sure that:

- The free end of the shield ground wire is pointed forward to the end of the cable
- The large end of the solder sleeve is put on the wire or cable first
- The inner edge of the rear seal ring is aligned with the end of the jacket.

BOEING PROPRIETARY - Copyright © Unpublished Work - See title page for details

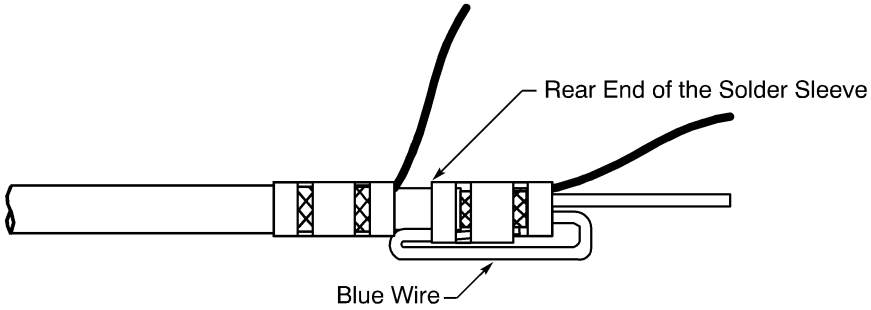

TERMINATION OF THE INNER SHIELD
Figure 71

(a) Fold the blue wire back and put the end of the wire between the inner shield and the rear end of the solder sleeve.

Make sure the center of the conductor is aligned with the solder ring of the solder sleeve.

CAUTION: THE STRANDS OF THE WIRE MUST NOT GO INTO THE SHIELD OF THE CABLE. A SHORT CIRCUIT BETWEEN THE CONDUCTOR OF THE WIRE CAN OCCUR.

(b) Shrink the solder sleeve into its position.

Make sure that:

- The solder sleeve stays in the correct position
- A minimum of 75 percent of the indicator ring on top of the solder ring is melted.

(c) Remove the necessary length of the shield ground wire to make the distance from the forward edge of the solder ring to the end of the wire equal to 2.0 inches maximum.

(6) Assemble the specified contact on the end of each shield ground wire.

For the assembly of:

- A ground block contact, refer to Paragraph 5.Q.
- An insert contact, refer to Paragraph 5.P.

O. Shield Ground Wire Assembly for BMS13-60 Type 27 Class 1 Wire

Table 30
WIRE TYPE CODES

Cable Description	Wire Type Code
BMS13-60 Type 27 Class 1	M1

This paragraph gives the procedure to assemble shield ground wires and contacts for installation in:

- The connector ground block
- The connector insert.

For the procedure to assemble the shield ground wires for:

- Wire or cable that has one shield, refer to Paragraph 5.M.
- Raychem 55A6160-() cable, refer to Paragraph 5.N.

For training purposes only!

BOEING PROPRIETARY - Copyright © Unpublished Work - See title page for details

Table 31
MECHANICAL FERRULE PART NUMBERS

Shield	Ferrule Type	Boeing Standard
Inner	Inner	BACS13S071BNP
	Outer	BACS13S149CNP
Outer	Inner	BACS13S090BNP
	Outer	BACS13S175CNP

NOTE: Refer to Subject 20-10-15 for approved suppliers of Boeing standard mechanical ferrules.

NOTE: Refer to the D-590 Boeing to Vendor Cross Reference Index for the supplier part numbers for the BACS13S ferrules.

Table 32
NECESSARY MATERIALS

Material	Part Number	Supplier
Sleeve, Heat Shrinkable	SAE-AMS-DTL-23053/12 Class 2	QPL
	SAE-AMS-DTL-23053/12 Class 5	QPL
	TFE-2X	Zeus
	TFE-4X	Zeus

(1) Prepare the cable for the termination of the outer shield. Refer to Figure 72 and Subject 20-00-15.

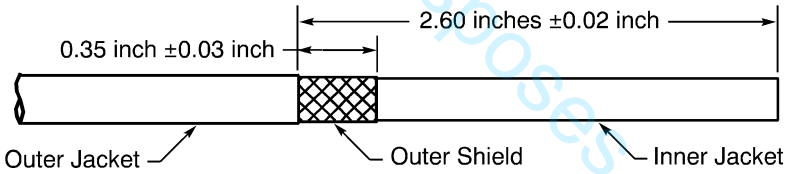

OUTER JACKET AND OUTER SHIELD REMOVAL
Figure 72

(a) Remove 2.60 inches ±0.02 inch of the outer jacket from the end of the cable.

(b) Remove the necessary length of the outer shield to make the distance from the end of the jacket to the end of the shield equal to 0.35 inch ±0.03 inch.

(2) Assemble the shield ground wire of the outer shield. Refer to Figure 73.

For training purposes only!

BOEING PROPRIETARY - Copyright © Unpublished Work - See title page for details

ASSEMBLY OF BACC65AA AND BACC65AB CONNECTORS

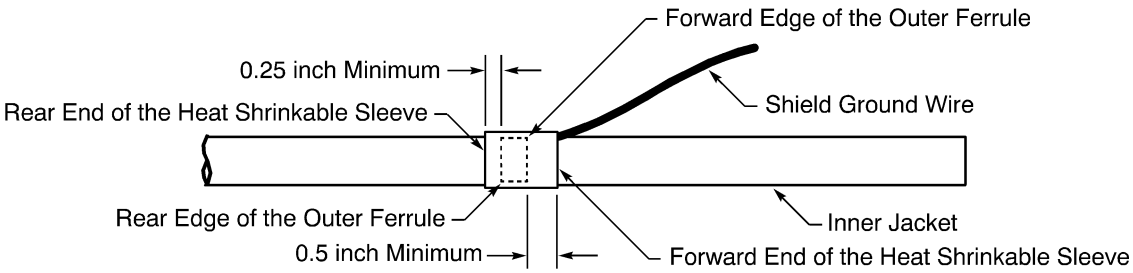

TERMINATION OF THE OUTER SHIELD
Figure 73

(a) Make a selection of an inner and outer ferrule from Table 31.

(b) Make a selection of a ferrule crimp tool. Refer to Subject 20-10-15.

(c) Make a selection of a heat shrinkable sleeve from Table 32.

Make sure that the heat shrinkable sleeve has the smallest diameter that can move freely on the shield ground wire assembly.

NOTE: For alternative heat shrinkable sleeves, refer to Subject 20-00-11.

(d) Make a selection of a shield ground wire. Refer to Subject 20-10-15.

NOTE: The shield ground wire must have the same size as the crimp barrel of the specified contact. Refer to Table 3 for the ground block contact.

(e) Put the outer ferrule on the cable.

(f) Put the inner ferrule on the cable.

Make sure that:

- The inner ferrule is between the shield and the inner jacket
- The rear end of the inner ferrule is tight against the end of the outer jacket.

(g) Remove the necessary length of insulation from one end of the shield ground wire. Refer to Subject 20-00-15.

Make sure that the bare conductor can extend a small amount farther than the length of the outer ferrule.

(h) Put the conductor of the shield ground wire between the shield and the outer ferrule.

Make sure that:

- The free end of the shield ground wire is pointed forward to the end of the wire
- The bare conductor extends a small amount farther than the rear end of the outer ferrule.

(i) Push the outer ferrule and the shield ground wire forward until the center of the outer ferrule is aligned with the center of the inner ferrule.

(j) Make sure that the forward end of the inner ferrule does not extend farther than 0.06 inch from the forward end of the outer ferrule.

(k) Crimp the outer ferrule.

(l) Remove the unwanted length of the shield that extends farther than the forward edge of the outer ferrule.

NOTE: The outer surface of the inner ferrule can be used to cut against.

For training purposes only!

BOEING PROPRIETARY - Copyright © Unpublished Work - See title page for details

(m) Remove the necessary length from the end of the shield ground wire to make the distance from the forward edge of the outer ferrule to the end of the wire equal to 2.0 inches maximum.

(n) Put the necessary length of heat shrinkable sleeve on the wire or cable.

Make sure that the distance:

- From the rear end of the ferrule to the rear end of the sleeve is 0.25 inch minimum
- From the forward end of the ferrule to the forward end of the sleeve is 0.5 inch minimum.

(o) Shrink the sleeve into its position. Refer to Subject 20-10-14.

(3) Prepare the cable for the termination of the inner shield. Refer to Figure 74 and Subject 20-00-15.

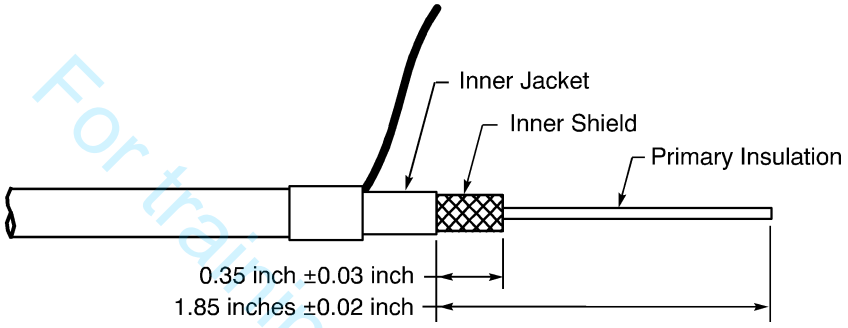

INNER JACKET AND INNER SHIELD REMOVAL
Figure 74

(a) Remove 1.85 inches ±0.02 inch of the inner jacket from the end of the cable.

(b) Remove the necessary length of the inner shield to make the distance from the end of the jacket to the end of the shield equal to 0.35 inch ±0.03 inch.

(4) Assemble the shield ground wire of the inner shield. Refer to Figure 75.

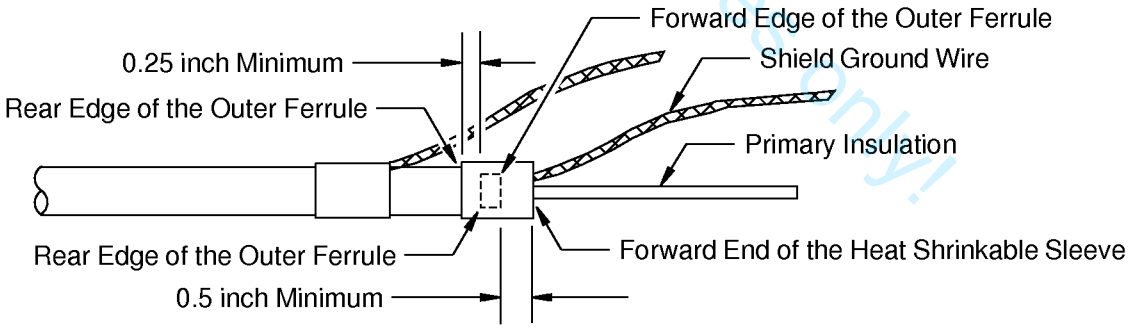

TERMINATION OF THE INNER SHIELD
Figure 75

(a) Make a selection of an inner and outer ferrule from Table 31.

(b) Make a selection of a ferrule crimp tool. Refer to Subject 20-10-15.

(c) Make a selection of a heat shrinkable sleeve from Table 32.

BOEING PROPRIETARY - Copyright © Unpublished Work - See title page for details
For training purposes only!

Make sure that the heat shrinkable sleeve has the smallest diameter that can move freely on the shield ground wire assembly.

NOTE: For alternative heat shrinkable sleeves, refer to Subject 20-00-11.

(d) Make a selection of a shield ground wire. Refer to Subject 20-10-15.

NOTE: The shield ground wire must have the same size as the crimp barrel of the specified contact. Refer to Subject 20-74-02 for the insert contact.

(e) Put the outer ferrule on the cable.

(f) Put the inner ferrule on the cable.

Make sure that:

- The inner ferrule is between the shield and the primary insulation
- The rear end of the inner ferrule is tight against the end of the inner jacket.

(g) Remove the necessary length of insulation from one end of the shield ground wire. Refer to Subject 20-00-15.

Make sure that the bare conductor can extend a small amount farther than the length of the outer ferrule.

(h) Put the conductor of the shield ground wire between the shield and the outer ferrule.

Make sure that:

- The free end of the shield ground wire is pointed forward to the end of the wire
- The bare conductor extends a small amount farther than the rear end of the outer ferrule.

(i) Push the outer ferrule and the shield ground wire forward until the center of the outer ferrule is aligned with the center of the inner ferrule.

(j) Make sure that the forward end of the inner ferrule does not extend farther than 0.06 inch from the forward end of the outer ferrule.

(k) Crimp the outer ferrule.

(l) Remove the unwanted length of the shield that extends farther than the forward edge of the outer ferrule.

NOTE: The outer surface of the inner ferrule can be used to cut against.

(m) Remove the necessary length from the end of the shield ground wire to make the distance from the forward edge of the outer ferrule to the end of the wire equal to 2.0 inches maximum.

(n) Put the necessary length of heat shrinkable sleeve on the wire or cable.

Make sure that the distance:

- From the rear end of the ferrule to the rear end of the sleeve is 0.25 inch minimum
- From the forward end of the ferrule to the forward end of the sleeve is 0.5 inch minimum.

(o) Shrink the sleeve into its position. Refer to Subject 20-10-14.

(5) Assemble the specified contact on the end of each shield ground wire.

For the assembly of:

- A ground block contact, refer to Paragraph 5.Q.
- An insert contact, refer to Paragraph 5.P.

For training purposes only!

BOEING PROPRIETARY - Copyright © Unpublished Work - See title page for details

P. Contact Assembly

For the procedure to assemble:

- Insert contacts, refer to Subject 20-74-02.
- Ground block contacts, refer to Paragraph 5.Q.

Q. Ground Block Contact Assembly

Table 33
GROUND BLOCK CONTACT CRIMP TOOLS

Wire Size (AWG)	Crimp Barrel Size	Crimp Tool			
		Basic Unit		Locator	
		Part Number	Setting	Part Number	Color
20	20	M22520/1-01	4	M22520/1-02	Red
		M22520/2-01	7	M22520/2-11	-
		WA22	7	M22520/2-11	-
		WA22LC	7	M22520/2-11	-
		WA27F	4	M22520/1-02	Red
18	18	M22520/1-01	5	M22520/1-02	Red
		WA27F	5	M22520/1-02	Red

(1) Make a selection of a crimp tool from Table 33.

(2) Remove 0.18 inch ±0.02 inch of insulation from the end of the shield ground wire.

Refer to:

- Figure 76
- Subject 20-00-15 for the insulation removal procedures.

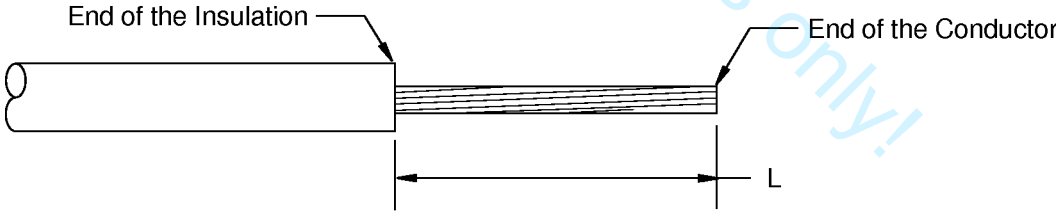

INSULATION REMOVAL LENGTH
Figure 76

(3) Put the end of the wire in the crimp barrel of the contact. Refer to Figure 77.

Make sure that:

- All of the strands of the conductor are in the crimp barrel
- The conductor can be seen in the inspection hole
- The distance from the end of the insulation to the crimp barrel is not more than 0.03 inch.

For training purposes only!

BOEING PROPRIETARY - Copyright © Unpublished Work - See title page for details

ASSEMBLY OF BACC65AA AND BACC65AB CONNECTORS

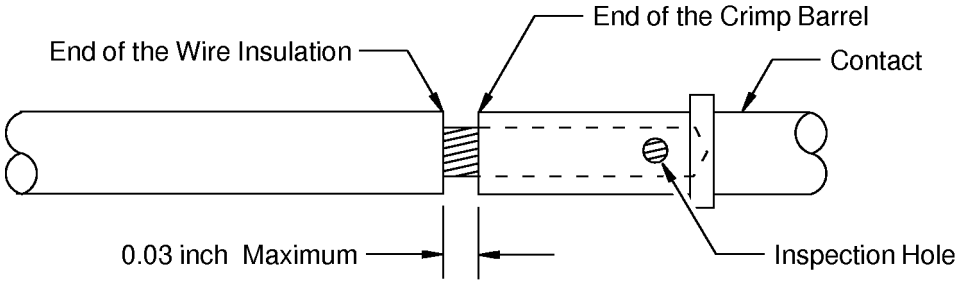

POSITION OF THE WIRE IN THE CRIMP BARREL OF THE CONTACT
Figure 77

(4) Crimp the contact.

Make sure that:

- All of the strands of the conductor are in the crimp barrel
- The conductor can be seen in the inspection hole
- The distance from the end of the insulation to the crimp barrel is not more than 0.03 inch.

R. Assembly of Size 5 Power Contacts

Refer to Subject 20-74-02.

S. Size 5 Coax Contact Assembly

Refer to Subject 20-74-02.

T. Assembly of Size 8 Coax Contacts

Refer to Subject 20-74-02.

U. Twinax Cable Preparation and Contact Assembly

Refer to Subject 20-74-02.

V. Size 8 Quadrax Contact Assembly

Refer to Subject 20-74-02.

W. Contact Insertion

This paragraph gives the procedure to install ground block contacts. For the procedure to install other contacts in the connector insert, refer to Subject 20-74-02.

For training purposes only.

BOEING PROPRIETARY - Copyright © Unpublished Work - See title page for details

Table 34
GROUND BLOCK CONTACT INSERTION TOOLS

Ground Block Contact Cavity Size	Contact Size	Insertion Tool	
		Part Number	Color
16	1618	DAK83-20	-
		M81969/14-11	Red
		ST2220-2-28	-
	1620	DAK83-20	-
		M81969/14-11	Red
		ST2220-2-28	-

(1) If a strain relief clamp is specified, put the strain relief clamp on the wire harness.

Make sure that the wire harness tie tab of the strain relief points away from the end of the harness.

(2) Make a selection of the contact insertion tool from Table 34 for ground block contacts.

NOTE: An insertion tool is not necessary.

(3) If an insertion tool is used:

(a) Put the contact assembly in the insertion tool.

(b) Axially align the insertion tool, the contact assembly and the contact cavity.

Make sure that the insertion tool and the contact assembly are perpendicular to the rear face of the ground block.

(c) Carefully push the insertion tool into the contact cavity until it stops.

Make sure that:

- The contact assembly and the contact cavity stay aligned
- Tension does not occur between the shield ground wire and the solder sleeve or the contact crimp barrel.

(d) Carefully pull the insertion tool out of the contact cavity.

Make sure that the insertion tool stays aligned with the contact cavity.

(e) Remove the insertion tool from the wire.

(4) If an insertion tool is not used:

(a) Axially align the contact assembly and the contact cavity.

Make sure that the contact assembly is perpendicular to the rear face of the ground block.

(b) Carefully push the the contact assembly into the contact cavity until it stops.

Make sure that:

- The contact assembly and the contact cavity stay aligned
- Tension does not occur between the shield ground wire and the solder sleeve or the contact crimp barrel.

(5) Lightly pull the wire to make sure that the contact is locked in the contact cavity.

For training purposes only!

BOEING PROPRIETARY - Copyright © Unpublished Work - See title page for details

ASSEMBLY OF BACC65AA AND BACC65AB CONNECTORS

CAUTION: DO NOT PULL THE WIRE WITH A STRONG OR A SUDDEN FORCE. THE FORCE CAN CAUSE DAMAGE TO THE CONNECTOR OR THE CONTACT.

CAUTION: DO NOT MAKE A DENT IN THE WIRE INSULATION WITH THE FINGERNAILS. DAMAGE TO THE WIRE INSULATION CAN CAUSE UNSATISFACTORY PERFORMANCE OF THE WIRE.

(6) If the contact is not locked in the contact cavity:

(a) Pull the contact assembly from the contact cavity.

(b) Do Step (3) or Step (4) again.

X. Insertion of Fiber Optic Contact Termini

Refer to Subject 20-74-02.

Y. Size 5 Coax Contact Insertion

Refer to Subject 20-74-02.

Z. Insertion of Size 8 Coax and Size 8 Twinax Contacts

Refer to Subject 20-74-02.

AA. Installation of Size 8 Quadrax Contacts

Refer to Subject 20-74-02.

AB. Seal of an Empty Contact Cavity

Refer to Subject 20-74-02.

AC. Seal of an Empty Contact Terminus Cavity

An empty contact terminus cavity must be sealed with a seal plug or a seal rod. Refer to Subject 20-60-08.

NOTE: The size of the contact terminus cavity is equivalent to the size 16 contact cavity.

AD. EMI Ground Spring Installation

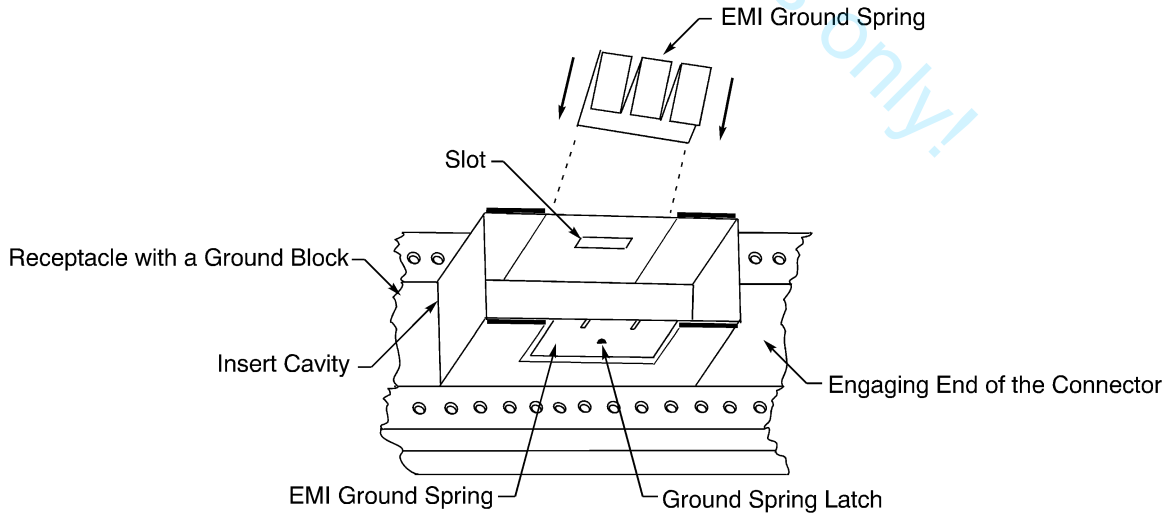

EMI GROUND SPRING INSTALLATION
Figure 78

For training purposes only!

BOEING PROPRIETARY - Copyright © Unpublished Work - See title page for details

Note: A receptacle with a ground block must have EMI ground springs installed.

Refer to Figure 78.

(1) From the engaging end of the connector, align the EMI ground spring with the longer sides of the insert cavity.

Make sure that the three springs are on the inside of the insert cavity.

(2) Push the ground spring to the face of the connector shell until the latch on the spring locks in the slot on the side of the insert cavity.

AE. Insert Installation

NOTE: The inserts can be installed with or without contacts.

NOTE: If a BACC10LD1 strain relief cable clamp is specified:

- The strain relief clamp must be installed on the connector shell before the installation of an insert that has assembled contacts.
- The strain relief clamp can be installed before or after the installation of inserts with unwired contacts.

NOTE: If a Glenair 527-281ML backshell is specified:

- The backshell must be put on the cable or cables before the contacts are installed in the connector inserts.
- The inserts must be installed in the connector shell before the backshell is installed on the connector shell.

For training purposes only!

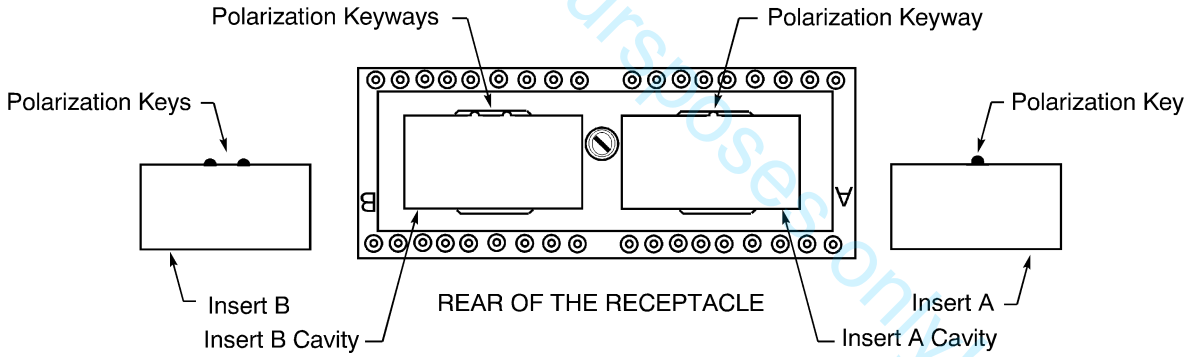

ALIGNMENT OF THE INSERTS IN THE RECEPTACLE
Figure 79

BOEING PROPRIETARY - Copyright © Unpublished Work - See title page for details

ASSEMBLY OF BACC65AA AND BACC65AB CONNECTORS

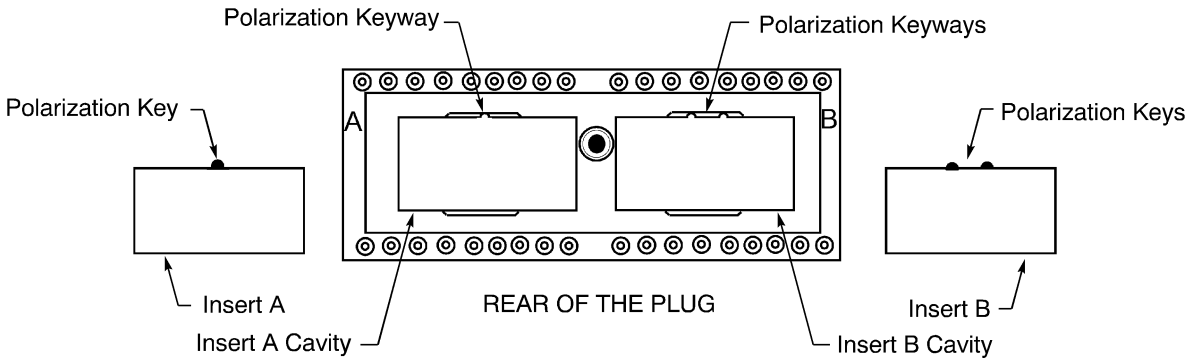

ALIGNMENT OF THE INSERTS IN THE PLUG
Figure 80

For training purposes only!

Refer to Figure 79 and Figure 80:

(1) Align the polarization key on the insert A with the polarization keyway on the rear side of the insert cavity A.

(2) Push the insert A into the insert cavity A until it stops and is locked in position.

(3) Align the polarization keys on the insert B with the polarization keyways on the rear side of the insert cavity B.

(4) Push the insert B into the insert cavity B until it stops and is locked in position.

AF. Installation of the Fiber Optic Alignment Sleeve Insert

Refer to Subject 20-74-02.

AG. Shield Terminator Band Installation

Refer to the procedures for the installation of the shield terminator band in Subject 20-25-14.

6. CONNECTOR POLARIZATION

A. Connector Polarization

The polarization code of the connector part number identifies the position of:

- The polarization key on the jackpost on the receptacle connector
- The polarization keyway on the jackscrew on the plug connector.

Refer to Figure 1.

(1) Find the polarization code in the connector part number from the equipment list.

(2) For that polarization code, find the correct position of:

- The polarization key on the receptacle
- The polarization keyway on the plug.

Refer to Paragraph 6.B.

(3) If the position of the key or the keyway does not agree with the code in the part number from the equipment list, put the key or keyway into the correct position. Refer to Paragraph 6.C.

(4) If the polarization code in the part number on the connector shell does not agree with the polarization code in the part number from the equipment list, change the part number on the connector shell. Refer to Paragraph 6.D.

BOEING PROPRIETARY - Copyright © Unpublished Work - See title page for details

ASSEMBLY OF BACC65AA AND BACC65AB CONNECTORS

B. Polarization Key and Polarization Keyway Positions

Refer to Figure 81 and Figure 82 for the polarization key position on the receptacle and the polarization keyway position on the plug.

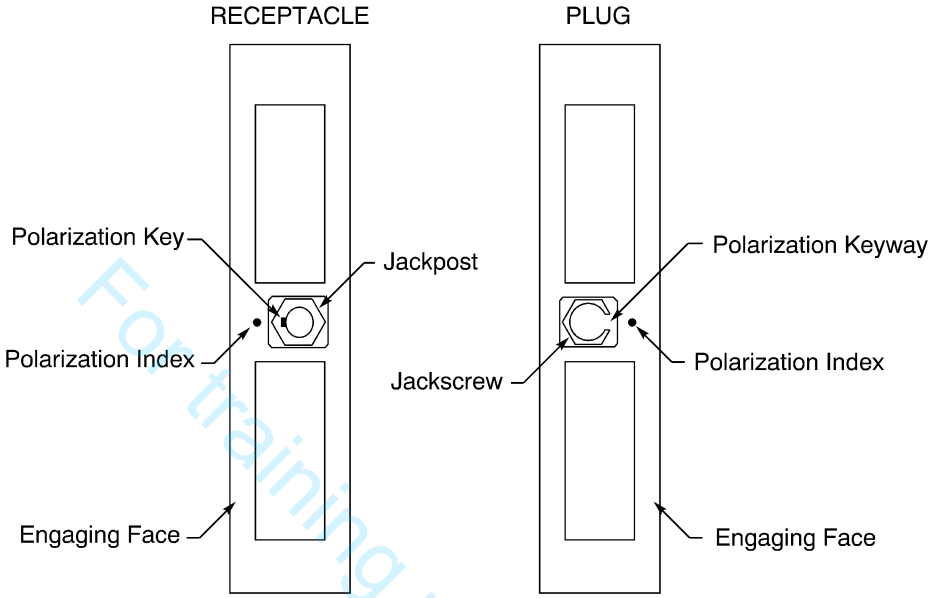

POLARIZATION KEY AND KEYWAY ON THE CONNECTOR
Figure 81

For training purposes only!

BOEING PROPRIETARY - Copyright © Unpublished Work - See title page for details

ASSEMBLY OF BACC65AA AND BACC65AB CONNECTORS

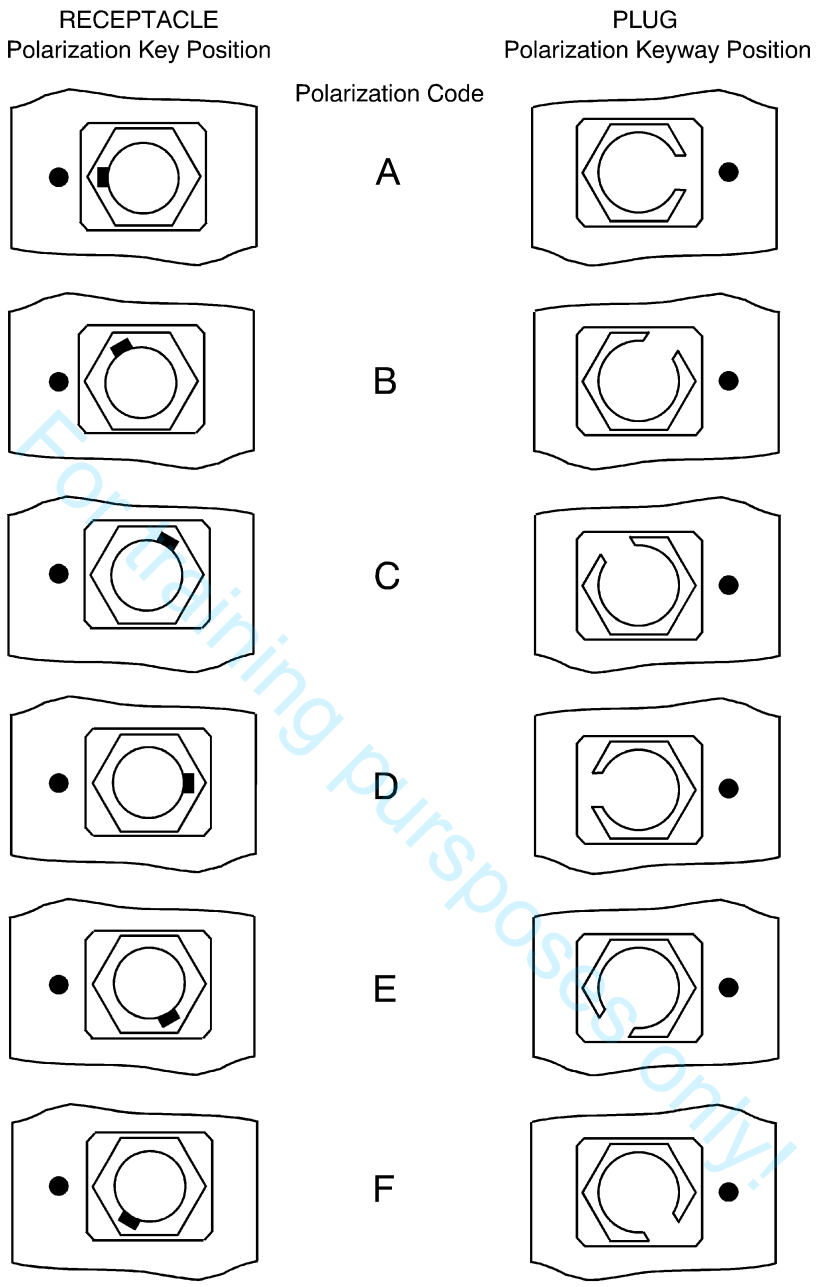

POSITIONS OF THE POLARIZATION KEY AND KEYWAY
Figure 82

For training purposes only!

C. Change of the Polarization Key and Keyway Positions

Table 35
NECESSARY MATERIALS

Material	Part Number	Supplier
Thread Lock Compound	222	Loctite

BOEING PROPRIETARY - Copyright © Unpublished Work - See title page for details

Table 36
JACKSCREW AND JACKPOST INSTALLATION TOOLS

Tool	Type	Size (inch)	Part Number
Driver	Retention Nut Wrench	-	282664
Torque	Socket Torque Wrench	1/4	-

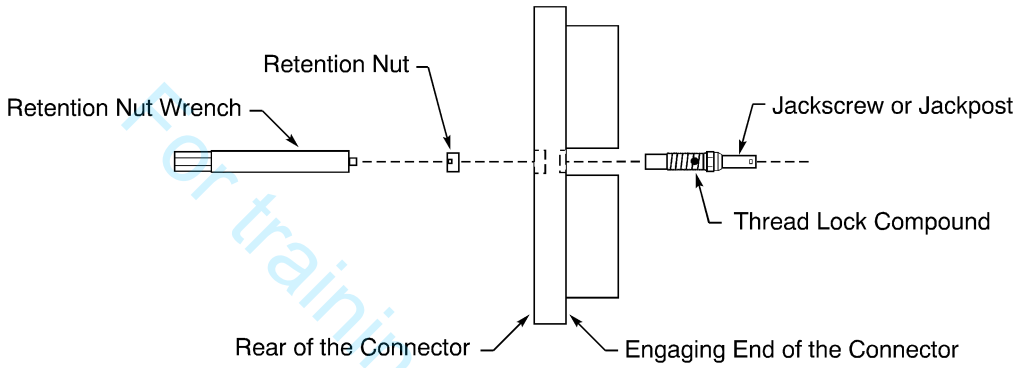

JACKSCREW AND JACKPOST INSTALLATION
Figure 83

Refer to Figure 83.

(1) Make a selection of these tools from Table 36.
- A retention nut wrench
- A socket torque wrench.

(2) Make a selection of thread lock compound from Table 35.

(3) If it is necessary, remove the jackscrew or jackpost. Refer to Paragraph 4.M.

(4) Put a drop of thread lock compound on a minimum of two threads on the rear end of the jackscrew or jackpost, near the hexagonal shoulder. Refer to Figure 84.

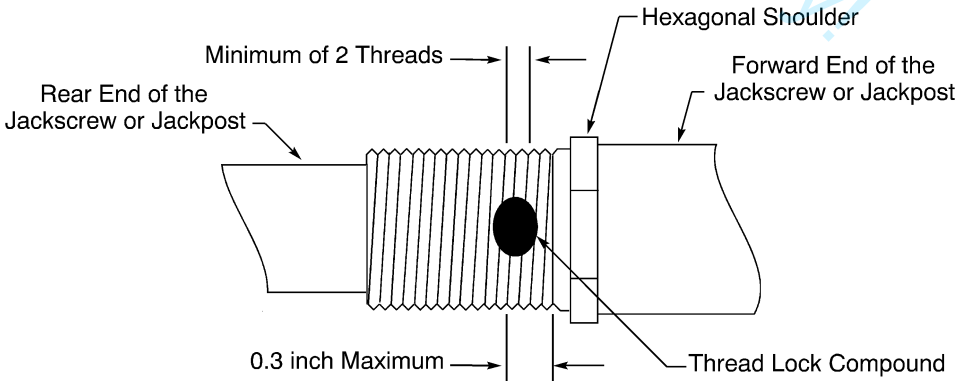

PREPARATION OF THE JACKSCREW AND THE JACKPOST
Figure 84

For training purposes only!

BOEING PROPRIETARY - Copyright © Unpublished Work - See title page for details

(5) Put the jackscrew or jackpost in the correct polarization position. Refer to Figure 81 and Figure 82.

(6) Put the end of the jackscrew or jackpost with threads in the polarization cavity on the engaging end of the connector.

Make sure that the hexagonal shoulder is in the cavity.

(7) From the rear of the connector, engage the threads of the retention nut with the threads of the jackscrew or jackpost.

(8) Torque the nut on the jackscrew 7 inch-pounds ±1 inch-pound.

D. Change of the Polarization Code in the Part Number on the Connector

Table 37
NECESSARY MATERIALS

Material	Part Number	Supplier
Ink	No. 68 Fast Dry	Independent
	No. 73X NW Opaque	Independent
	No. 73X Opaque	Independent
Paint, Clear	683-3-2	Akzo
	Clear Lacquer	Tartan
	EC-776	3M
	EC-776SR	3M
Pen	Permanent Ink Pen, Ultra Fine Point	Sanford Sharpie

For training purposes only!

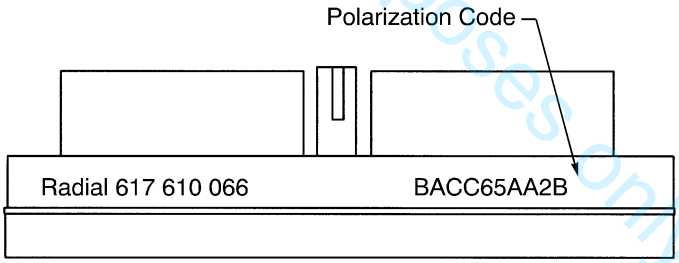

LOCATION OF THE POLARIZATION CODE ON THE CONNECTOR
Figure 85

Refer to Figure 85.

(1) Make a selection of these materials from Table 37:
- An ink or a permanent ink pen
- A clear paint.

(2) If the polarization code in the part number on the connector is incorrect:

(a) Apply a layer of ink on the code on the connector shell.

Make sure that the code cannot be read.

(b) Write the new code on the connector shell adjacent to the layer of ink.

BOEING PROPRIETARY - Copyright © Unpublished Work - See title page for details

(3) If the part number on the connector does not have a polarization code, write the code on the connector shell at the end of the part number.

(4) Let the ink dry for a minimum of 10 minutes.

(5) Apply a layer of the clear paint on the part number on the connector shell.

CAUTION: DO NOT APPLY PAINT ON THE CONTACTS. PAINT ON THE SURFACE OF A CONTACT CAN CAUSE UNSATISFACTORY ELECTRICAL PERFORMANCE OF THE CONTACT.

(6) Let the paint dry before the connector shell is touched or moved.

7. INSPECTION AND CLEANING OF A FIBER OPTIC ALIGNMENT SLEEVE INSERT

A. Inspection and Cleaning of a Fiber Optic Alignment Sleeve Insert

Refer to Subject 20-74-02.

8. CONNECTOR INSTALLATION

A. Connector Equipment Identification Number

An equipment identification number for each insert cavity must be put on each related end of the connector.

Table 38
IDENTIFICATION LABEL MATERIAL

Part Number	Type	Supplier
7860	Label	3M
7880	Label	3M
B-428	Label	Brady
B-437	Label	Brady
B-614	Label	Brady
B-637	Label	Brady
B-966B	Label	Brady
B-969	Label	Brady
IT-702	Tape	Ideal Tape
No. 850	Tape	3M
No. 853	Tape	3M
TC	Tape	Brothers Industries
TX	Tape	Brothers Industries
X-24348	Label	Boeing

For training purposes only!

BOEING PROPRIETARY - Copyright © Unpublished Work - See title page for details

ASSEMBLY OF BACC65AA AND BACC65AB CONNECTORS

Table 39
MAXIMUM SIZE OF IDENTIFICATION LABELS

Connector			Label Size (inch)	
Part Number	**Type**	**Configuration**	**Maximum Length**	**Maximum Width**
BACC65AA2A()	Plug	Without Ground Block	0.7	0.2
BACC65AA2B()	Plug	Ground Block	1.0	0.2
BACC65AB2A()	Receptacle	Without Ground Block	0.7	0.2
BACC65AB2B()	Receptacle	Ground Block	0.7	0.2

(1) Make a selection of an identification label material from Table 38.

Make sure the identification label material is the correct size for the plug or receptacle. Refer to Table 39.

(2) Make a selection of these materials from Table 37:
- An ink or a permanent ink pen
- A clear paint.

(3) Make the correct equipment identification number for each insert cavity. Refer to Figure 86.

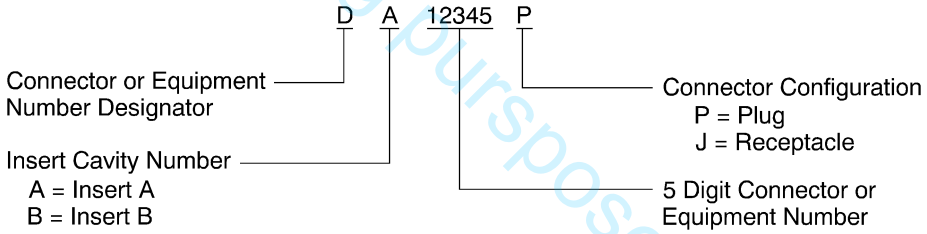

EQUIPMENT IDENTIFICATION NUMBER
Figure 86

(a) From the equipment list, identify the equipment number of the connector shell.

(b) From this number, use only the numeric portion and the first letter after the numeric portion to make the equipment number of the insert cavity.

NOTE: The first letter after the numeric portion is a P or a J.

(c) For insert cavity A, add the characters DA in front of this number.

(d) For insert cavity B, add the characters DB in front of this number.

(4) For each insert cavity, put the applicable equipment number on each applicable label.

(5) Let the ink dry for a minimum of 10 minutes.

(6) Apply a layer of the clear paint on the equipment number.

(7) Let the layer of paint dry.

(8) Put the applicable label on the smaller side of the receptacle or plug, near the related insert cavity.

For training purposes only!

BOEING PROPRIETARY - Copyright © Unpublished Work - See title page for details

ASSEMBLY OF BACC65AA AND BACC65AB CONNECTORS

Refer to:

- Figure 87 for the receptacle
- Figure 88 for the plug.

NOTE: Each connector has 2 labels or 2 pieces of tape.

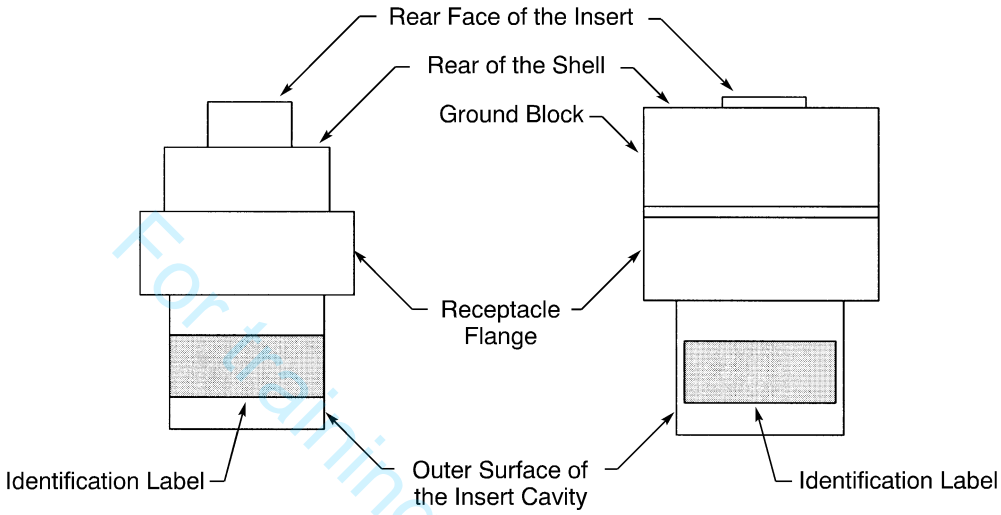

POSITION OF THE EQUIPMENT IDENTIFICATION LABEL ON THE RECEPTACLE
Figure 87

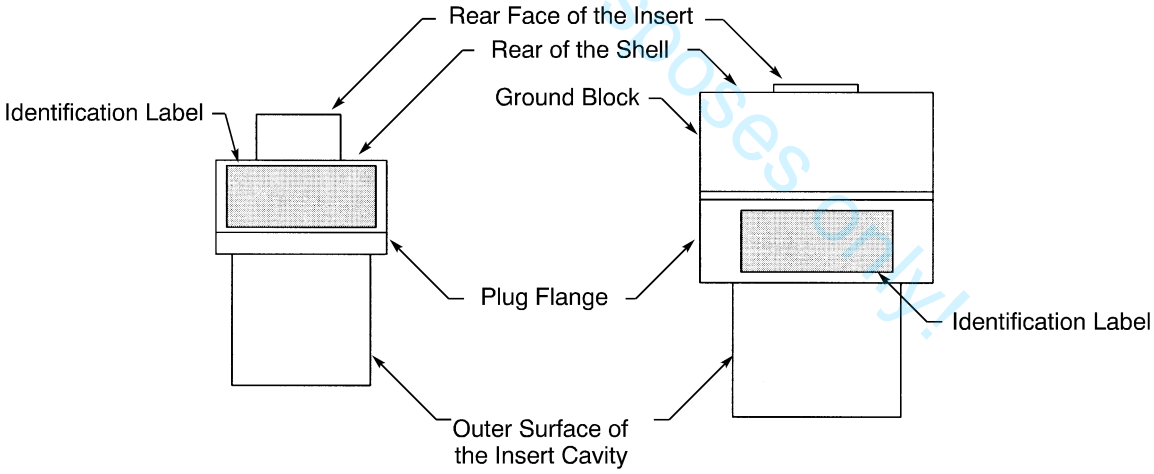

POSITION OF THE EQUIPMENT IDENTIFICATION LABEL ON THE PLUG
Figure 88

B. Installation of the Receptacle in a Panel

For the installation of the receptacle with a ground block, refer to Paragraph 8.C.

For training purposes only!

BOEING PROPRIETARY - Copyright © Unpublished Work - See title page for details

ASSEMBLY OF BACC65AA AND BACC65AB CONNECTORS

Table 40
RECEPTACLE INSTALLATION FASTENERS

Part	Part Number	Supplier
Screw	NAS1802-06-()	QPL
	BACS12HN6U()	QPL

Table 41
NECESSARY TOOLS

Tool	Type	Size (inch)
Driver	Phillips Head Screwdriver	-
	Socket Wrench	1/4
Torque	Phillips Head Torque Screwdriver	-
	Socket Torque Wrench	1/4

For training purposes only!

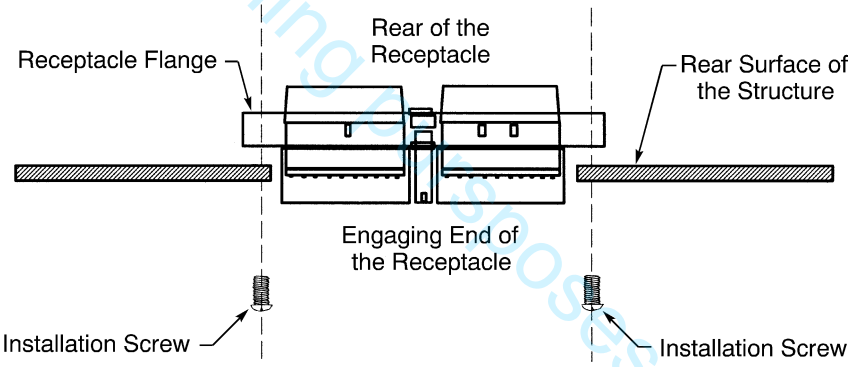

ALIGNMENT OF THE RECEPTACLE AND THE STRUCTURE
Figure 89

Refer to Figure 89.

(1) Make a selection of four new screws from Table 40.

CAUTION: MAKE SURE THAT THE SCREWS ARE NEW. SCREWS THAT ARE NOT NEW CAN CAUSE UNSATISFACTORY PERFORMANCE OF THE CONNECTOR.

(2) Make a selection of these tools from Table 41.
- A torque tool
- A driver.

(3) On the rear side of the structure, align the mounting holes of the receptacle flange with the holes on the structure.

(4) Put the connector shell in the cutout.

(5) From the front side of the structure, install a screw in each of the four mounting holes.

BOEING PROPRIETARY - Copyright © Unpublished Work - See title page for details

(6) In sequence, tighten each screw a small amount until:
- Each screw head is against the structure
- The connector flange is fully against the structure.

(7) Torque each screw 30 inch-pounds ±2 inch-pounds.

C. Installation of the Receptacle with a Ground Block

For the installation of the receptacle in an unpressurized area, refer to Paragraph 8.D.

(1) Prepare the faying surfaces necessary for the electrical bond of the receptacle shell to structure. Refer to:
- Figure 90 for the connector receptacle flange
- Figure 90 and Figure 91 for the rear surface of the structure
- Figure 90 and Figure 92 for the front surface of the structure adjacent to the bottom surface of the head of the installation screws.
- Subject 20-20-00 for the procedures to prepare the faying surface.

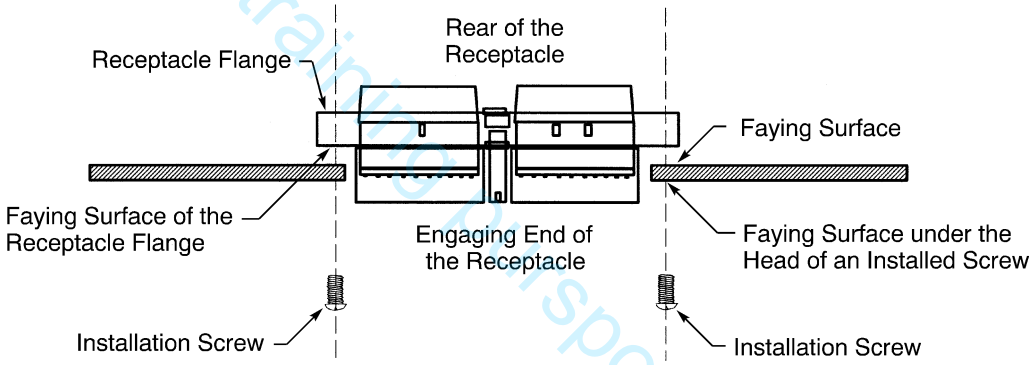

LOCATION OF THE FAYING SURFACES
Figure 90

For training purposes only!

BOEING PROPRIETARY - Copyright © Unpublished Work - See title page for details

ASSEMBLY OF BACC65AA AND BACC65AB CONNECTORS

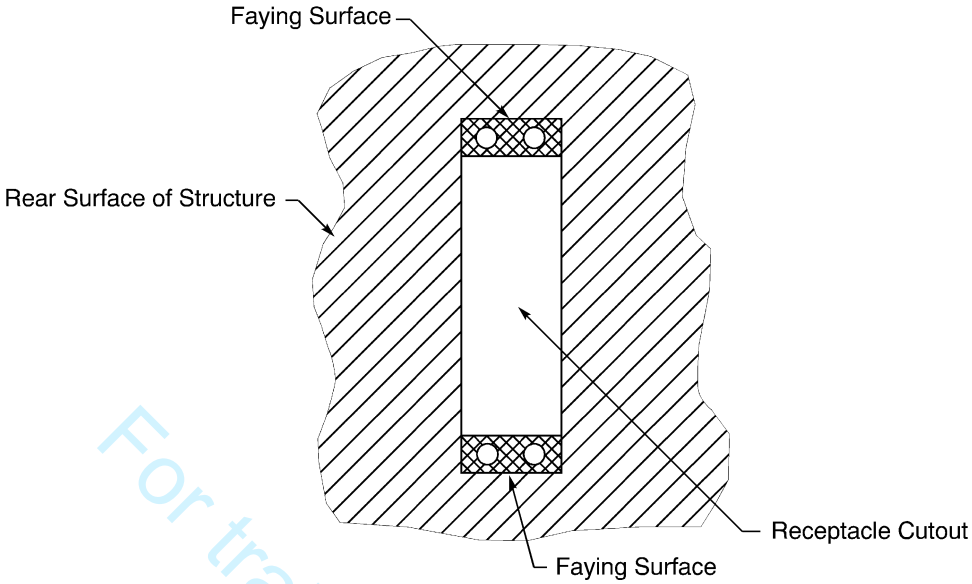

FAYING SURFACE ON THE REAR SIDE OF THE STRUCTURE
Figure 91

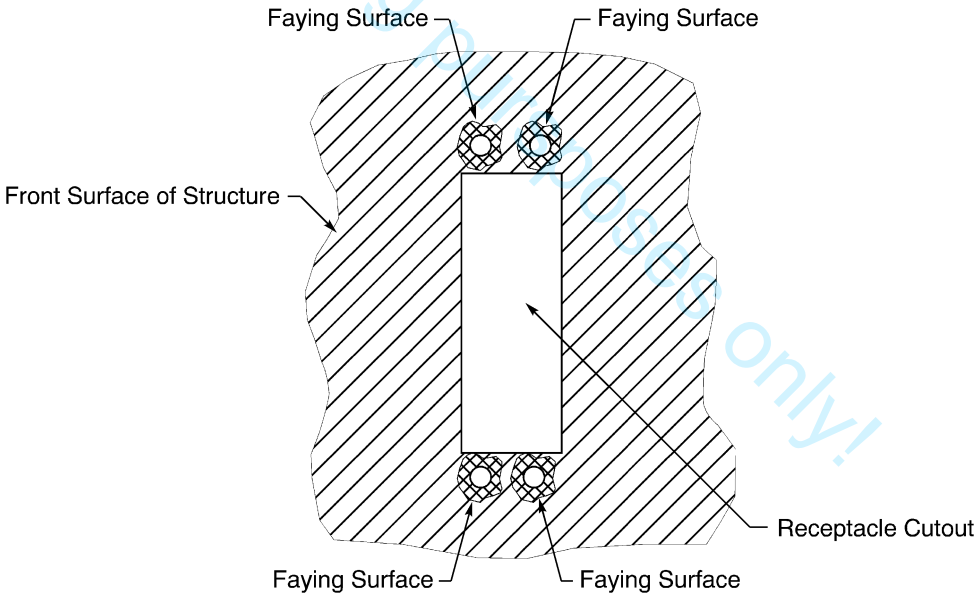

FAYING SURFACE ON THE FRONT SIDE OF THE STRUCTURE
Figure 92

(2) Install the receptacle. Refer to Paragraph 8.B.

(3) Do the electrical bond test for receptacle connector shells. Refer to Subject 20-20-00 and Figure 93.

For training purposes only!

BOEING PROPRIETARY - Copyright © Unpublished Work - See title page for details

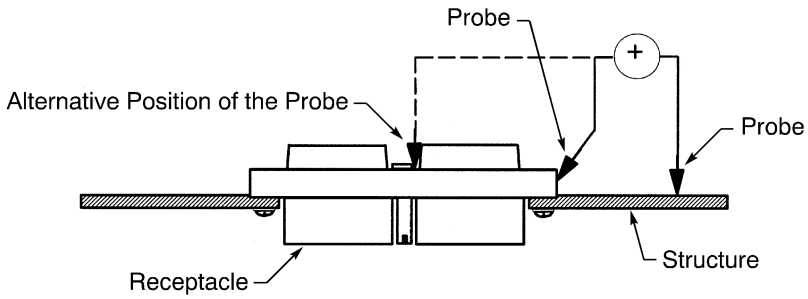

TEST POINTS FOR THE RECEPTACLE TO STRUCTURE BOND
Figure 93

(4) If the bond has an electrical resistance greater than the maximum for connector shell bonds specified in Subject 20-20-00:
- Remove the receptacle from the structure. Refer to Paragraph 4.C.
- Do Step (1) through Step (3) again.

D. Installation of the Receptacle with a Ground Block in an Unpressurized Area

(1) Install the receptacle. Refer to Paragraph 8.C.

Make sure that alodine is not applied to the faying surface on the front side of the installation surface adjacent to the bottom of the head of the screw, when the screw is installed. These areas must to remain bare aluminum.

(2) Seal the connector.

Refer to Subject 20-20-00 for the assembly of a seal for electrical connector shell bonds.

(3) Apply a layer the sealant on the head of each screw.

Make sure that the sealant makes an overlap with the head of the screw and the installation surface.

E. Plug and Receptacle Connection

Before mating a plug and a receptacle that have fiber optic termini, inspect and, if necessary, clean the fiber optic termini. Refer to Subject 20-12-20.

Table 42
NECESSARY TOOLS

Tool	Type	Size (inch)
Torque	Wrench with a Hex Driver	9/64

These conditions are applicable:
- Inserts must be installed in each insert cavity
- The polarization position of the plug and receptacle must be the same.

(1) Make a selection of an torque tool from Table 42.

(2) If the receptacle has a cap, remove the cap. Refer to Paragraph 8.F.

(3) Align the plug with the receptacle.

For training purposes only!

BOEING PROPRIETARY - Copyright © Unpublished Work - See title page for details

ASSEMBLY OF BACC65AA AND BACC65AB CONNECTORS

Make sure that:

- Insert A on the plug is aligned with insert A on the receptacle
- Insert B on the plug is aligned with insert B on the receptacle.

Refer to Figure 94.

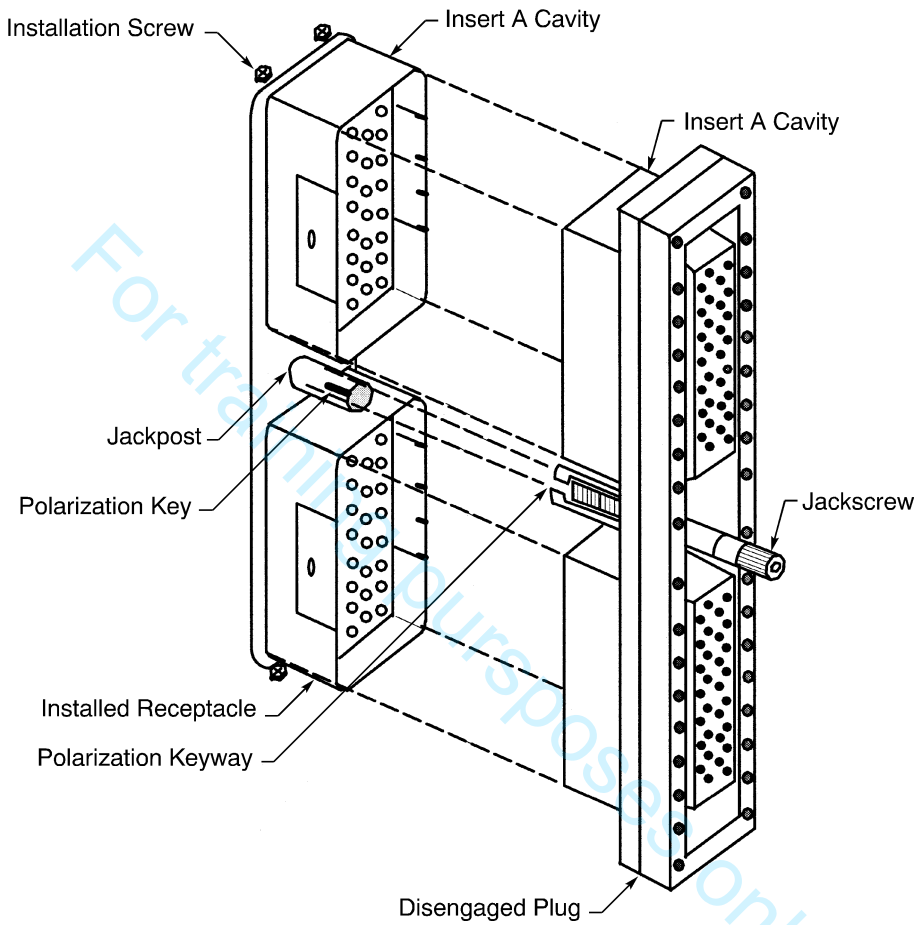

ALIGNMENT OF THE PLUG AND THE RECEPTACLE
Figure 94

For training purposes only!

(4) Push the plug to the receptacle until the screw in the jackscrew stops in the jackpost.

Make sure that:

- The polarization key and keyway are engaged
- The insert cavities are engaged.

Refer to Figure 95.

BOEING PROPRIETARY - Copyright © Unpublished Work - See title page for details

ASSEMBLY OF BACC65AA AND BACC65AB CONNECTORS

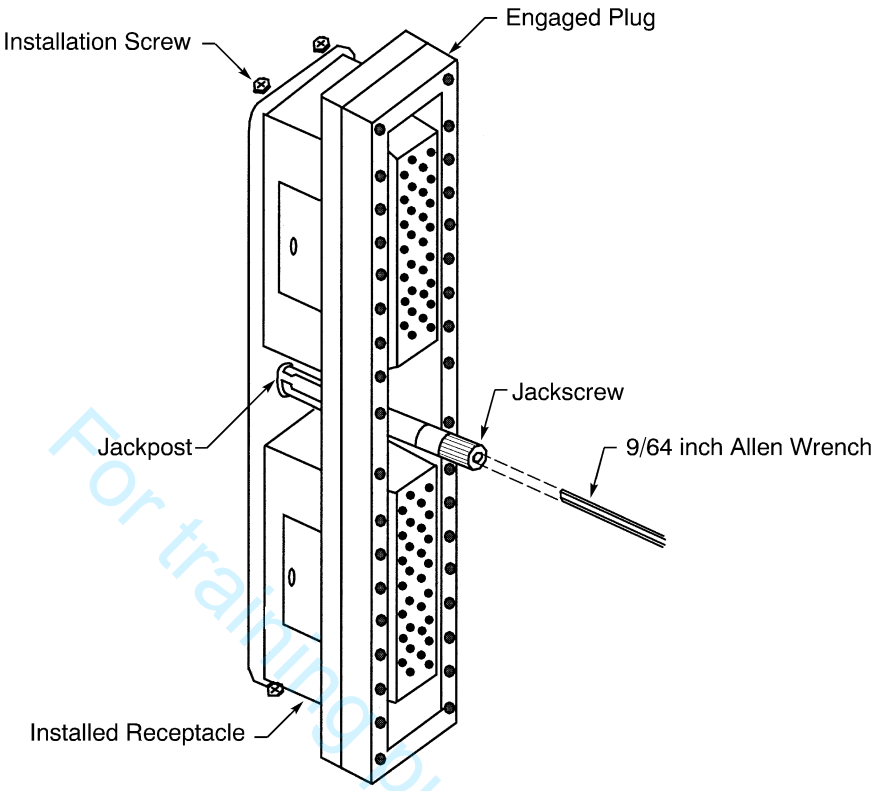

PLUG AND RECEPTACLE CONNECTION
Figure 95

(5) Torque the jackscrew to 7 inch-pounds ±1 inch-pound.

F. Fiber Optic Insert Receptacle Cap Removal

Table 43
NECESSARY TOOLS

Tool	Type	Size (inch)
Driver	Allen Wrench	9/64
	Screwdriver, Hex	9/64

(1) Make a selection of a driver from Table 43.

NOTE: The driver can have a ball type end.

(2) Turn the coupling screw on the cap counterclockwise with the driver until the coupling screw is disengaged. Refer to Figure 9.

(3) Pull the cap from the receptacle.

For training purposes only!

BOEING PROPRIETARY - Copyright © Unpublished Work - See title page for details

9. APPROVED TOOL SUPPLIERS

A. Contact Removal Tools

Table 44
CONTACT REMOVAL TOOL SUPPLIERS

Removal Tool	Supplier
ATR2079	Astro
ATR2080	Astro
M81969/14-11	QPL
RRX20B	Russtech

B. Contact Crimp Tools

Table 45
CRIMP TOOL SUPPLIERS

Crimp Tool	Supplier
M22520/1-01	QPL
M22520/1-02	QPL
WA22	Daniels
WA22LC	Daniels
WA27F	Daniels
Y797	Daniels

C. Contact Insertion Tools

Table 46
CONTACT INSERTION TOOL SUPPLIERS

Insertion Tool	Supplier
DAK83-20	Daniels
M81969/14-11	QPL
ST2220-2-28	Boeing

D. Contact Terminus Removal Tools

Table 47
CONTACT TERMINUS REMOVAL TOOL SUPPLIERS

Removal Tool	Supplier
M81969/14-03	QPL

For training purposes only!

BOEING PROPRIETARY - Copyright © Unpublished Work - See title page for details

E. Contact Terminus Insertion Tools

Table 48
CONTACT TERMINUS INSERTION TOOL SUPPLIERS

Insertion Tool	Supplier
M81969/14-03	QPL

F. Special Tools

Table 49
SPECIAL TOOL SUPPLIERS

Tool	Supplier
282 521 002	Radiall
282664	Radiall

For training pursposes only!

BOEING PROPRIETARY - Copyright © Unpublished Work - See title page for details

ASSEMBLY OF BACC65AN, BACC65AP, BACC65AV, AND BACC65AW CONNECTORS

Paragraph		Page
1.	**GENERAL DATA**	**1**
A.	Damage Conditions - Rear Face of the Insert	1
B.	Damage Conditions - Front Face of the Insert	1
C.	Damage Conditions - Coupling Fastener	1
D.	Damage Conditions - EMI Ground Springs	1
E.	Damage Conditions - Strain Relief Clamp	1
F.	Minimum Wire O.D. for an Environmentally Sealed Connector	1
2.	**PART NUMBERS AND DESCRIPTION**	**1**
A.	Connector Shell Part Numbers	1
B.	Connector Shell Component Part Numbers	3
C.	BACC65AN and BACC65AP Connector Description	3
D.	BACC65AV and BACC65AW Connector Description	9
E.	Connector Insert Part Numbers	12
F.	Size 2222, 2020, 1616, 1212, 0808, and 0508 Contact Part Numbers	12
G.	Ground Block Contact Part Numbers	12
H.	Size 3, Size 5 and Size 8 Coax Contact Part Numbers	13
I.	Size 8 Twinax Contacts	15
J.	Size 8 Quadrax Contact Part Numbers	15
K.	Fiber Optic Contact Terminus Part Numbers	15
L.	Fiber Optic Alignment Sleeve Insert Part Numbers	15
M.	Strain Relief Backshell Part Numbers	15
N.	EMI Backshell Part Numbers	16
O.	Ground Spring Part Numbers	18
3.	**INSERT CONFIGURATIONS**	**19**
A.	BACI10AL, BACI10AM, and BACI10AP Connector Inserts	19
4.	**CONNECTOR DISASSEMBLY**	**19**
A.	Connector Separation	19
B.	Removal of the Receptacle	21
C.	Removal of the Fiber Optic Alignment Sleeve Insert	22
D.	Removal of the 1/4-Turn Connector Shell Coupling Fastener	22
E.	Insert Removal	22
F.	Seal Plug and Seal Rod Removal	24
G.	Contact Removal	24
H.	Removal of a Fiber Optic Contact Terminus	24
I.	Size 3 Coax Contact Removal	25
J.	EMI Ground Spring Removal	26
K.	Strain Relief Backshell Removal	26
L.	Removal of the BACC10LH Backshell	27
M.	Disassembly of the Radiall 617924013 Backshell	31

20-74-13 CONTENTS

For training purposes only!

BOEING PROPRIETARY - Copyright © Unpublished Work - See title page for details

Paragraph		Page
4.	CONNECTOR DISASSEMBLY (continued)	
N.	Disassembly of the Radiall 617927007 Backshell	32
5.	CONNECTOR ASSEMBLY	33
A.	Shield Ground Wire Assembly	33
B.	Shield Ground Wire Assembly for Shield Termination at the EMI Backshell	34
C.	Shield Ground Wire Assembly for Raychem 55A6160-() Cable	35
D.	Shield Ground Wire Assembly for BMS13-60 Type 27 Class 1 Wire	38
E.	Contact Assembly	42
F.	Ground Block Contact Assembly	42
G.	Assembly of Size 0505 Power Contacts	43
H.	Size 5 Coax Contact Assembly	43
I.	Assembly of Size 8 Coax Contacts	43
J.	Assembly of Size 8 Twinax Contacts	43
K.	Assembly of Size 8 Quadrax Contacts	44
L.	Size 3 Coax Contact Assembly	44
M.	Contact Insertion	49
N.	Insertion of a Fiber Optic Contact Terminus	50
O.	Installation of Size 8 Quadrax Contacts	50
P.	Size 5 Coax Contact Insertion	51
Q.	Size 3 Coax Contact Installation	51
R.	Seal of an Empty Insert Contact Cavity	52
S.	EMI Ground Spring Installation	52
T.	Insert Installation	52
U.	Installation of the Fiber Optic Alignment Sleeve Insert	53
V.	Installation of the 1/4 -Turn Connector Shell Coupling Fastener	54
W.	Installation of the BACC10LL and BACC10LM Backshells	55
X.	Installation of the BACC10LV Backshell	57
Y.	Installation of the BACC10LH Backshell	59
Z.	Assembly of the Radiall 617924013 Backshell	64
AA.	Installation of the Radiall 617927007 Backshell	65
AB.	Shield Terminator Band Installation	69
6.	CONNECTOR POLARIZATION	69
A.	Connector Polarization - Shell Types A, B, and C	69
B.	Connector Polarization - Shell Types D, E and F	69
C.	Polarization Post and Polarization Receptacle Positions - Shell Types A, B, and C	70
D.	Polarization Post and Polarization Receptacle Positions - Shell Types D, E and F	71
E.	Change of the Polarization Post and Polarization Receptacle Positions - Shell Types A, B, and C	72
F.	Change of the Polarization Post and Polarization Receptacle Positions - Shell Types D, E and F	74

20-74-13 CONTENTS

For training purposes only!

BOEING PROPRIETARY - Copyright © Unpublished Work - See title page for details

Paragraph		Page
6.	CONNECTOR POLARIZATION (continued)	
G.	Change of the Polarization Code in the Part Number on the Connector - Shell Types A, B, and C	76
7.	INSPECTION AND CLEANING OF A FIBER OPTIC ALIGNMENT SLEEVE INSERT	77
A.	Inspection and Cleaning of a Fiber Optic Alignment Sleeve Insert	77
8.	CONNECTOR INSTALLATION	77
A.	Equipment Identification	77
B.	Installation of the Receptacle	77
C.	Installation of the Receptacle with a Ground Block	78
D.	Plug and Receptacle Connection	80
9.	APPROVED TOOL SUPPLIERS	82
A.	Contact Removal Tools	82
B.	Contact Crimp Tools	82
C.	Contact Insertion Tools	83
D.	Special Tools	84

For training purposes only!

BOEING PROPRIETARY - Copyright © Unpublished Work - See title page for details

ASSEMBLY OF BACC65AN, BACC65AP, BACC65AV, AND BACC65AW CONNECTORS

1. GENERAL DATA

A. Damage Conditions - Rear Face of the Insert

Refer to Subject 20-74-02.

B. Damage Conditions - Front Face of the Insert

Refer to Subject 20-74-02.

C. Damage Conditions - Coupling Fastener

The coupling fastener must be replaced if:

- The fastener has a crack
- The fastener is bent
- The fastener is broken.

D. Damage Conditions - EMI Ground Springs

The EMI ground springs must be replaced when one or more of the ground spring fingers is bent or broken.

E. Damage Conditions - Strain Relief Clamp

The strain relief clamp must be replaced if:

- The clamp has a crack
- The wire harness tie tab is broken.

A saddle bar of a strain relief clamp must be replaced if:

- The saddle bar screw hole threads are damaged
- The saddle bar has a crack.

F. Minimum Wire O.D. for an Environmentally Sealed Connector

Refer to Subject 20-74-02.

2. PART NUMBERS AND DESCRIPTION

A. Connector Shell Part Numbers

Table 1
CONNECTOR SHELL PART NUMBERS

Boeing Standard	Connector Type	Configuration
BACC65AN()	Plug	1 Removable BACI10AL, BACI10AM or BACI10AP Insert
BACC65AP()	Receptacle	
BACC65AV()	Receptacle	1 or 2 Size 3 Coax Contacts
BACC65AW()	Plug	

For training purposes only!

BOEING PROPRIETARY - Copyright © Unpublished Work - See title page for details

ASSEMBLY OF BACC65AN, BACC65AP, BACC65AV, AND BACC65AW CONNECTORS

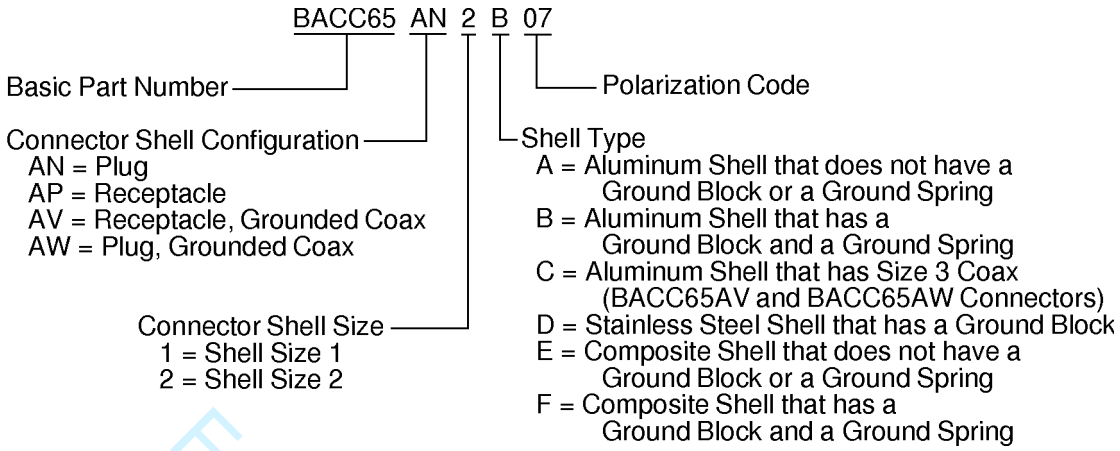

CONNECTOR PART NUMBER STRUCTURE
Figure 1

Table 2
SHELL TYPES AND POLARIZATION CODES

Shell Type	Polarization Codes	Polarization Post Retention
A	01 thru 16	Polarization posts and polarization receptacles are retained on the connector shell by a retaining plate.
B		
C		
D	AA thru DD	Polarization posts and polarization receptacles snap into the shell.
E		
F		

Table 3
APPROVED SUPPLIERS OF BOEING STANDARD CONNECTOR SHELLS

Connector	Supplier
BACC65AN()	Radiall
BACC65AP()	Radiall
BACC65AV()	Radiall
BACC65AW()	Radiall

For training purposes only

BOEING PROPRIETARY - Copyright © Unpublished Work - See title page for details

B. Connector Shell Component Part Numbers

Table 4
CONNECTOR SHELL COMPONENT PART NUMBERS

Component	Part Number or Standard	Applicable Connector		Supplier
		Part Number	Shell Type	
Coupling Fastener Kit	617983001	BACC65AN and BACC65AP	A, B, D	Radiall
		BACC65AV and BACC65AW	C	
	617983002	BACC65AN and BACC65AP	E, F	Radiall
Polarization Post	BACC65AT1	BACC65AN	A, B, and C	Radiall
	BACC65AT2	BACC65AN	D, E, and F	Radiall
Polarization Receptacle	BACC65AU1	BACC65AP	A, B, and C	Radiall
	BACC65AU2	BACC65AP	D, E, and F	Radiall
Retaining Plate	BACC65AY	BACC65AN, BACC65AP, BACC65AV, and BACC65AW	A, B, and C	Radiall

For training purposes only!

C. BACC65AN and BACC65AP Connector Description

Refer to Figure 2 and Figure 3 for configurations of these connectors.

The BACC65AN and BACC65AP connectors have these technical features:

- A rectangular metal or composite shell in two shell sizes
- The larger shell size has a removable BACI10AL, or BACI10AM insert
- The smaller shell size has a removable BACI10AP insert
- Two 1/4 turn coupling fasteners that attach the plug to the receptacle
- Two polarization posts on the BACC65AN plug connector
- Two polarization receptacles on the BACC65AP receptacle connector
- 16 polarization positions
- EMI ground springs on some receptacle shell configurations
- A ground block for ground wire terminations on some connector configurations
- Rear insertion and removal of the insert assembly
- Rear release, rear removal size 2222, 2020, 1616, 1212, 0808, and 0508 crimp type contacts
- Rear release, rear removal size 5 coax contacts
- Rear release, rear removal size 8 coax, twinax, and quadrax contacts
- A removable strain relief clamp or EMI backshell.

BOEING PROPRIETARY - Copyright © Unpublished Work - See title page for details

ASSEMBLY OF BACC65AN, BACC65AP, BACC65AV, AND BACC65AW CONNECTORS

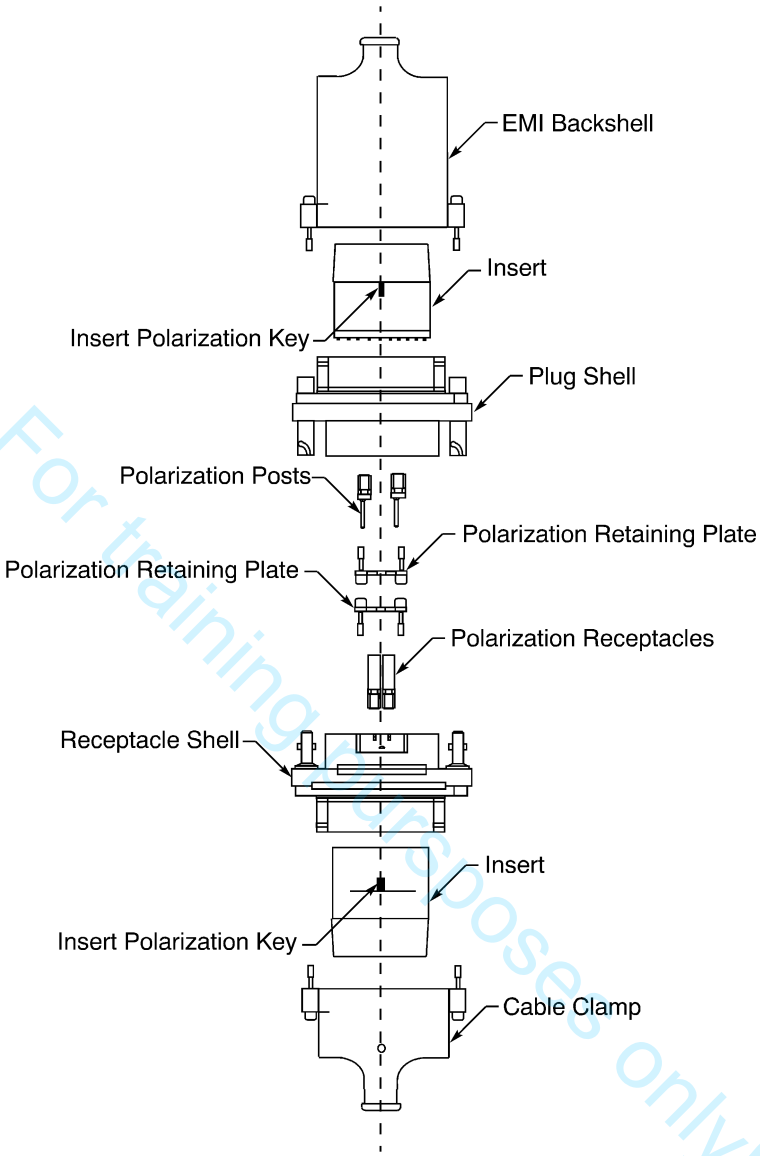

For training purposes only!

BACC65AN() AND BACC65AP() SHELL TYPE A, B, AND C CONNECTOR CONFIGURATION
Figure 2

BOEING PROPRIETARY - Copyright © Unpublished Work - See title page for details

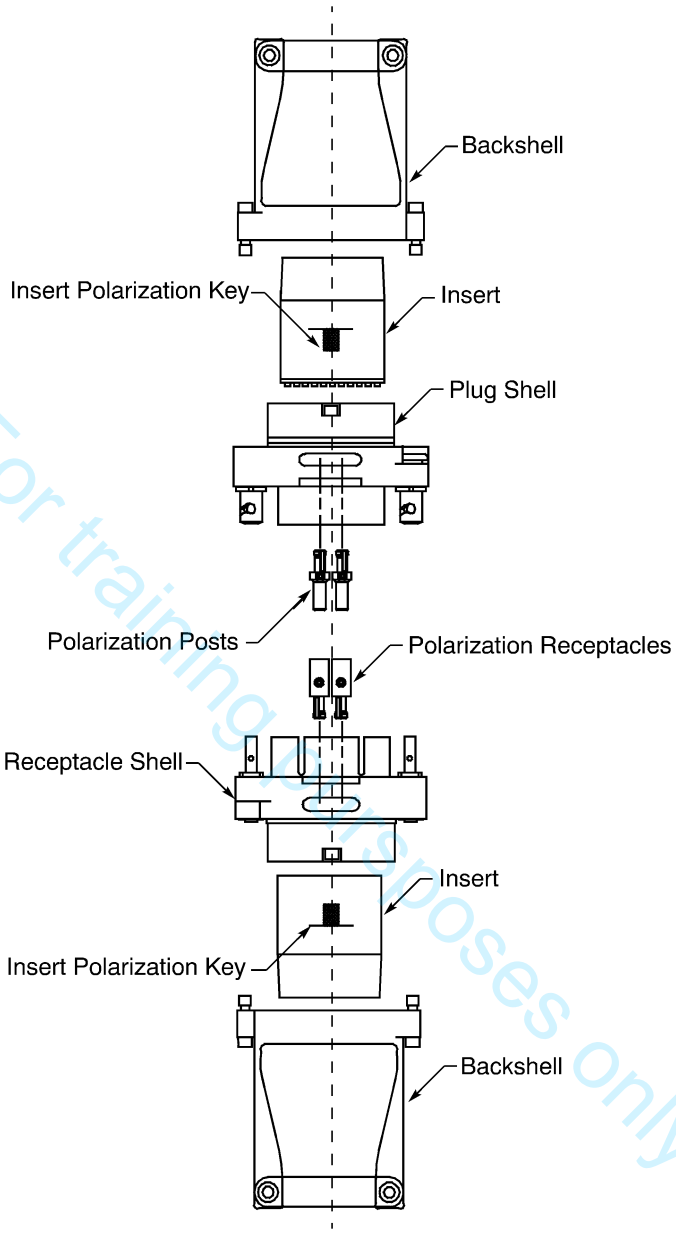

For training purposes only!

BACC65AN() AND BACC65AP() SHELL TYPE D, E, and F CONNECTOR CONFIGURATION
Figure 3

Table 5
BACC65AN AND BACC65AP CONNECTOR SHELLS

Shell	Shell Size	Type	Configuration	Reference
BACC65AN1A	1	Plug	Without ground block	Figure 4
BACC65AN2A	2	Plug	Without ground block	Figure 5
BACC65AN1B	1	Plug	With ground block	Figure 6

BOEING PROPRIETARY - Copyright © Unpublished Work - See title page for details

ASSEMBLY OF BACC65AN, BACC65AP, BACC65AV, AND BACC65AW CONNECTORS

Table 5 (continued)

Shell	Shell Size	Type	Configuration	Reference
BACC65AN2B	2	Plug	With ground block	Figure 7
BACC65AN2D	2	Plug	With ground block	Figure 8
BACC65AP1A	1	Receptacle	Without EMI ground springs, without ground block	Figure 9
BACC65AP2A	2	Receptacle	Without EMI ground springs, without ground block	Figure 10
BACC65AP1B	1	Receptacle	With EMI ground springs, with ground block	Figure 11
BACC65AP2B	2	Receptacle	With EMI ground springs, with ground block	Figure 12
BACC65AP2D	2	Receptacle	With EMI ground springs, with ground block	Figure 13

For training purposes only

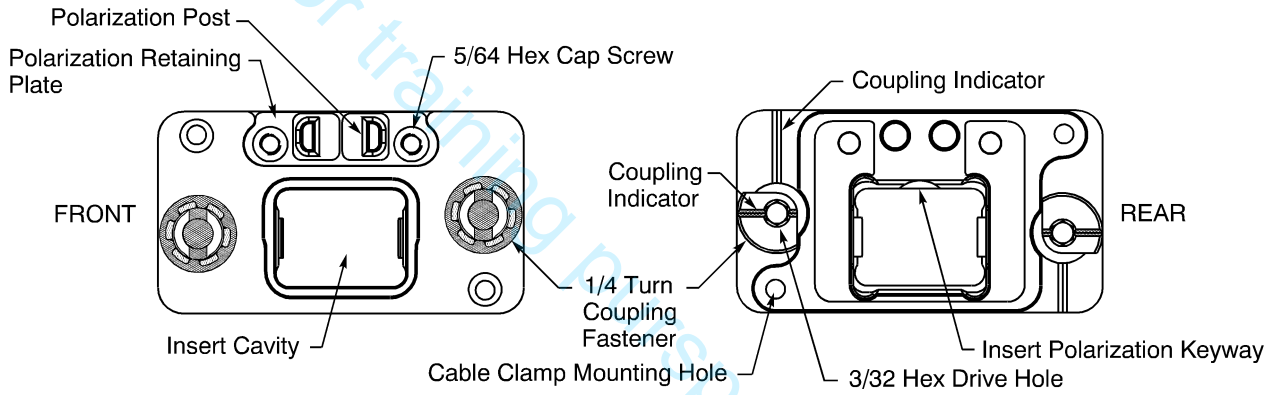

BACC65AN1A() PLUG
Figure 4

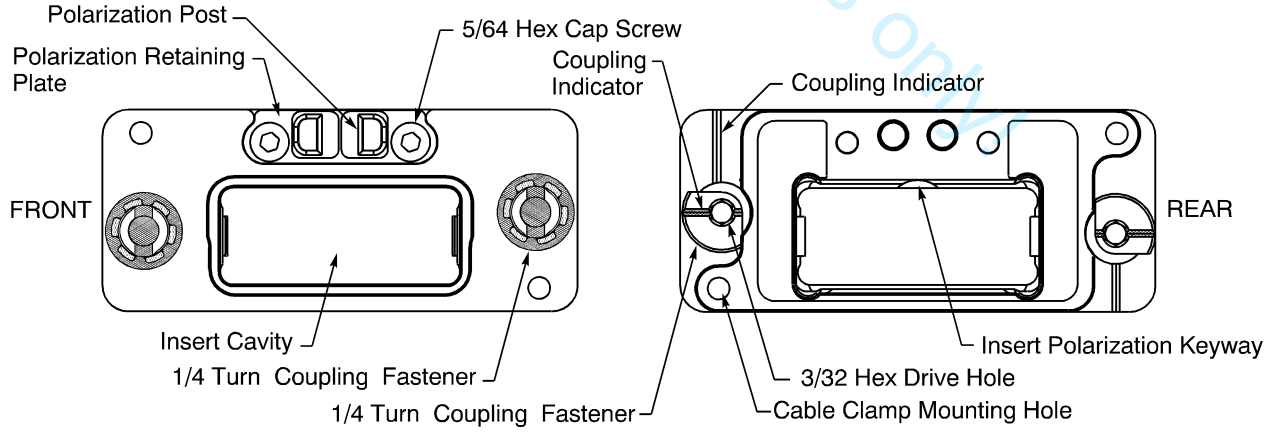

BACC65AN2A() PLUG
Figure 5

BOEING PROPRIETARY - Copyright © Unpublished Work - See title page for details

ASSEMBLY OF BACC65AN, BACC65AP, BACC65AV, AND BACC65AW CONNECTORS

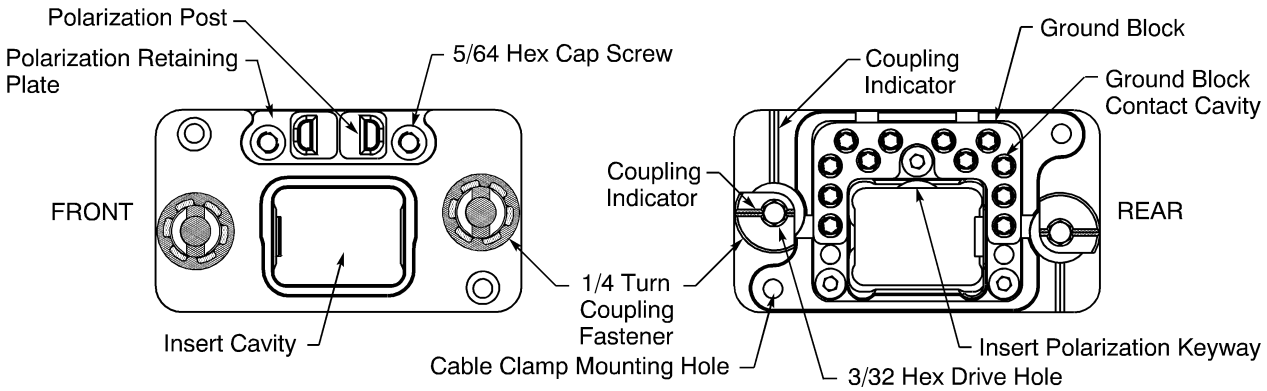

BACC65AN1B() PLUG
Figure 6

For training purposes only!

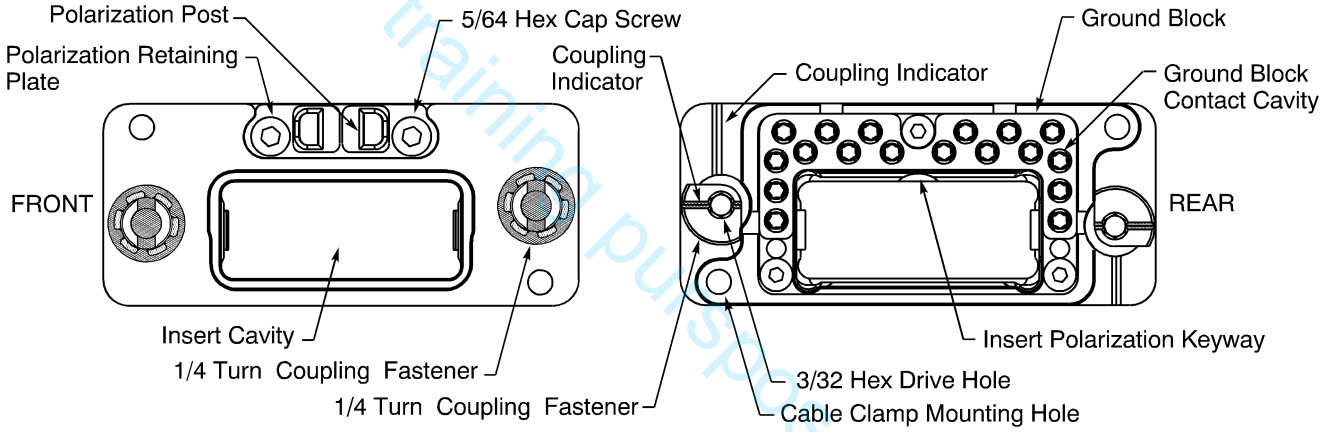

BACC65AN2B() PLUG
Figure 7

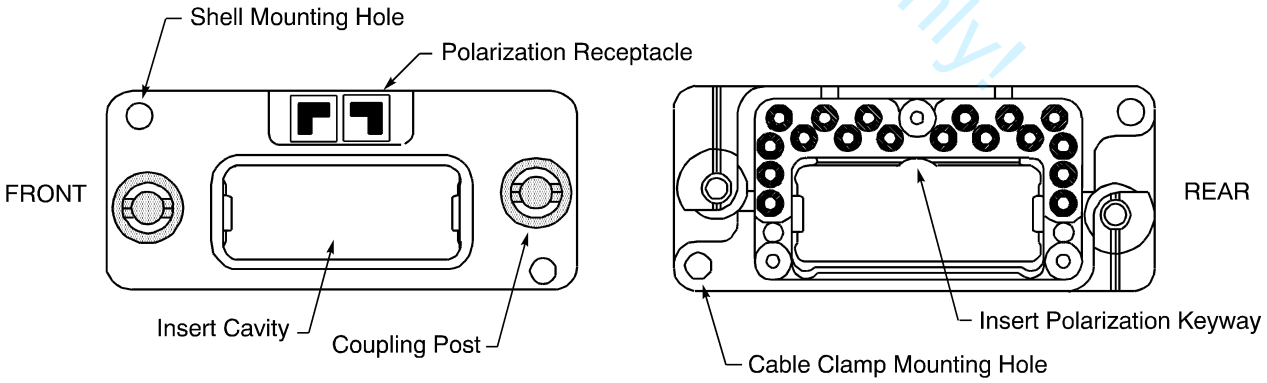

BACC65AN2D() PLUG
Figure 8

BOEING PROPRIETARY - Copyright © Unpublished Work - See title page for details

ASSEMBLY OF BACC65AN, BACC65AP, BACC65AV, AND BACC65AW CONNECTORS

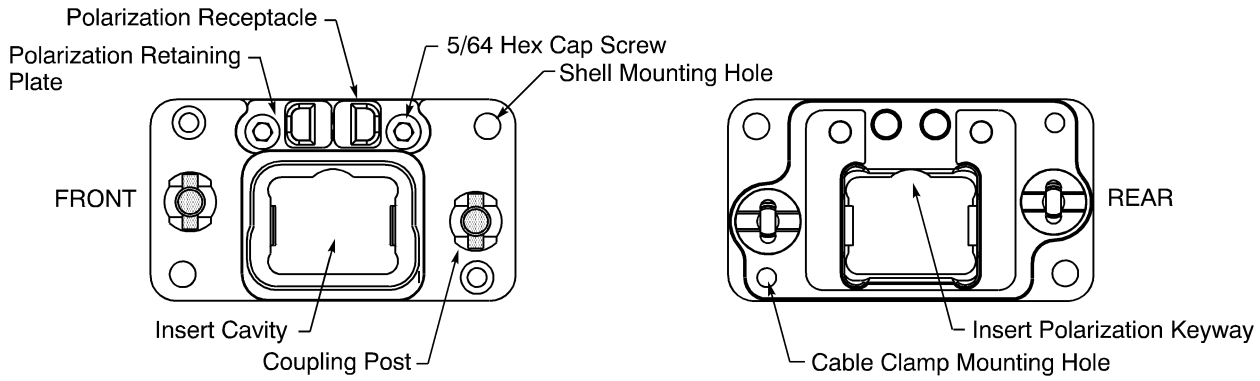

BACC65AP1A() RECEPTACLE
Figure 9

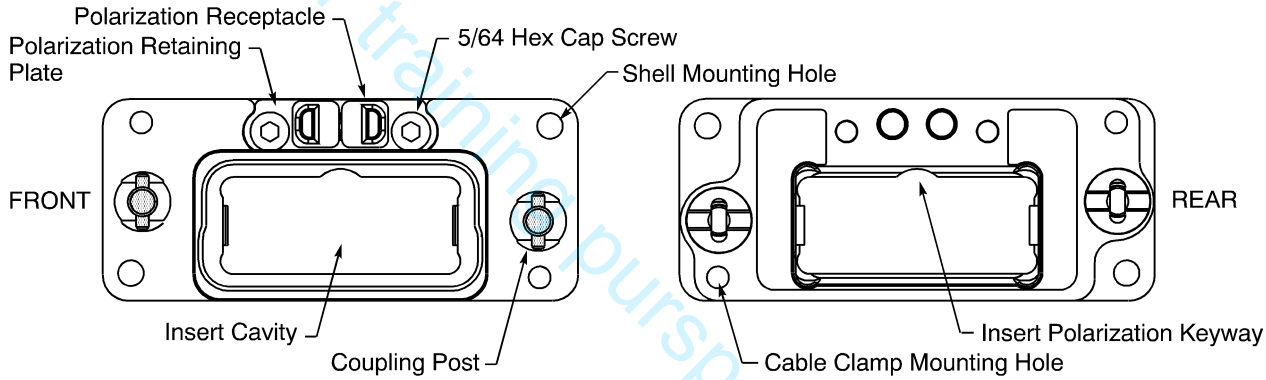

BACC65AP2A() RECEPTACLE
Figure 10

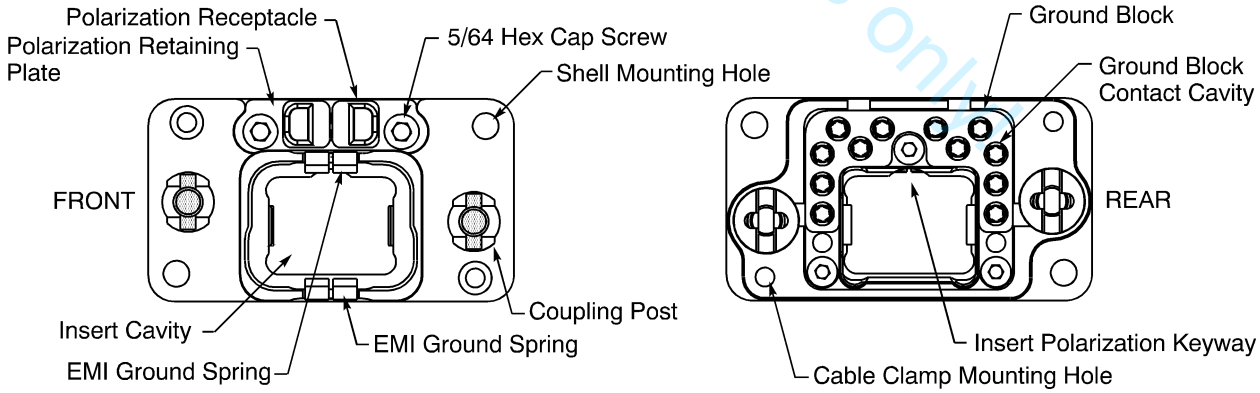

BACC65AP1B() RECEPTACLE
Figure 11

For training purposes only

BOEING PROPRIETARY - Copyright © Unpublished Work - See title page for details

ASSEMBLY OF BACC65AN, BACC65AP, BACC65AV, AND BACC65AW CONNECTORS

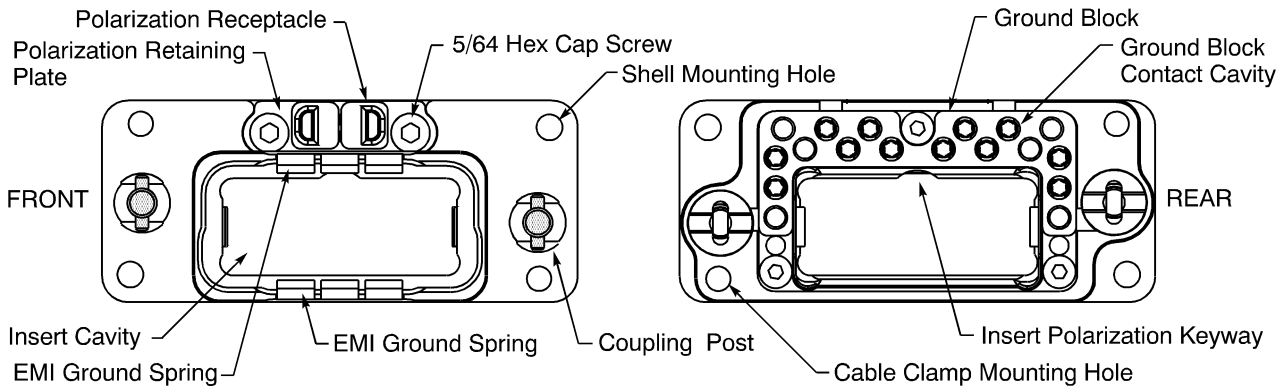

BACC65AP2B() RECEPTACLE
Figure 12

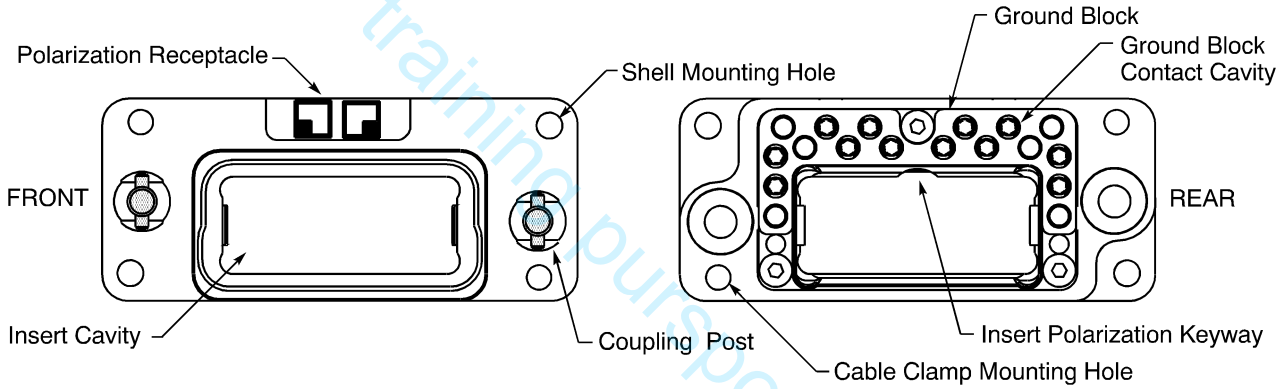

BACC65AP2D() RECEPTACLE
Figure 13

For training purposes only!

D. BACC65AV and BACC65AW Connector Description

Refer to Figure 14 for the configuration of the BACC65AV receptacle and the BACC65AW plug.

The BACC65AV and BACC65AW connectors have these technical features:

- A rectangular metal shell
- One or two size 3 coax contacts that are assembled to the rear of the connector shell
- Two 1/4 turn coupling fasteners that attach the plug to the receptacle
- Two polarization posts on the BACC65AW plug connector
- Two polarization receptacles on the BACC65AV receptacle connector
- 16 polarization positions
- A removable strain relief clamp or EMI backshell.

BOEING PROPRIETARY - Copyright © Unpublished Work - See title page for details

ASSEMBLY OF BACC65AN, BACC65AP, BACC65AV, AND BACC65AW CONNECTORS

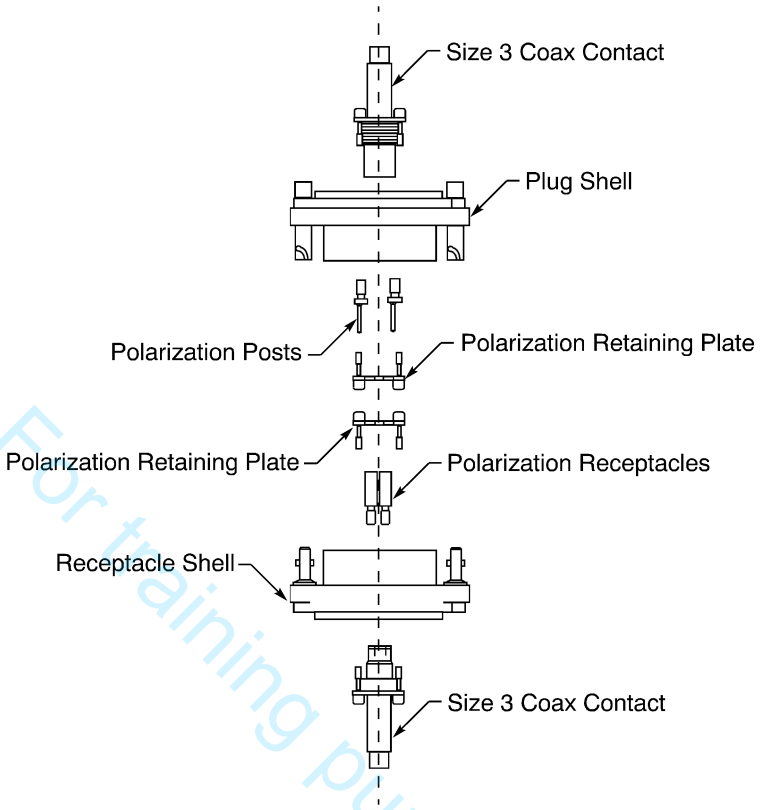

BACC65AV() AND BACC65AW() CONNECTOR CONFIGURATION
Figure 14

Table 6
BACC65AV AND BACC65AW CONNECTORS

Boeing Standard	Shell Size	Connector Type	Contact			Reference
			Type	Size	Quantity	
BACC65AV1C	1	Receptacle	Coax	3	1	Figure 15
BACC65AV2C	2	Receptacle	Coax	3	2	Figure 16
BACC65AW1C	1	Plug	Coax	3	1	Figure 17
BACC65AW2C	2	Plug	Coax	3	2	Figure 18

For training purposes only!

BOEING PROPRIETARY - Copyright © Unpublished Work - See title page for details

ASSEMBLY OF BACC65AN, BACC65AP, BACC65AV, AND BACC65AW CONNECTORS

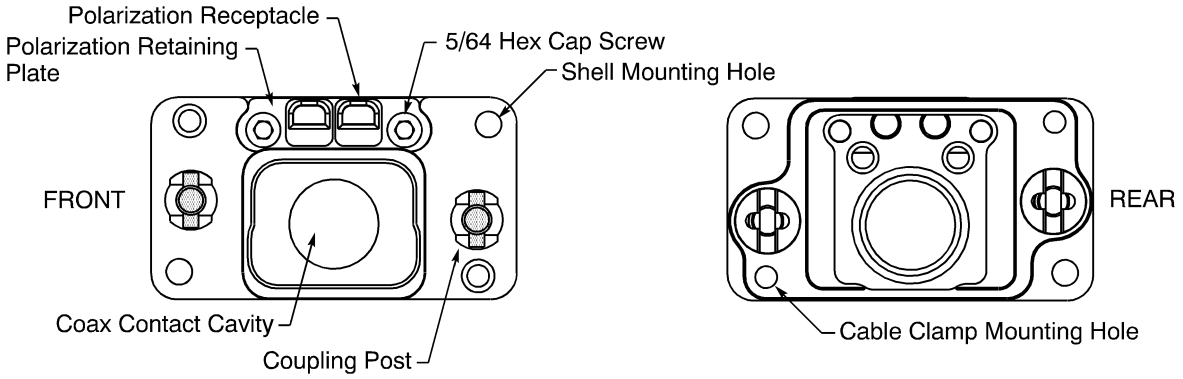

BACC65AV1C() RECEPTACLE
Figure 15

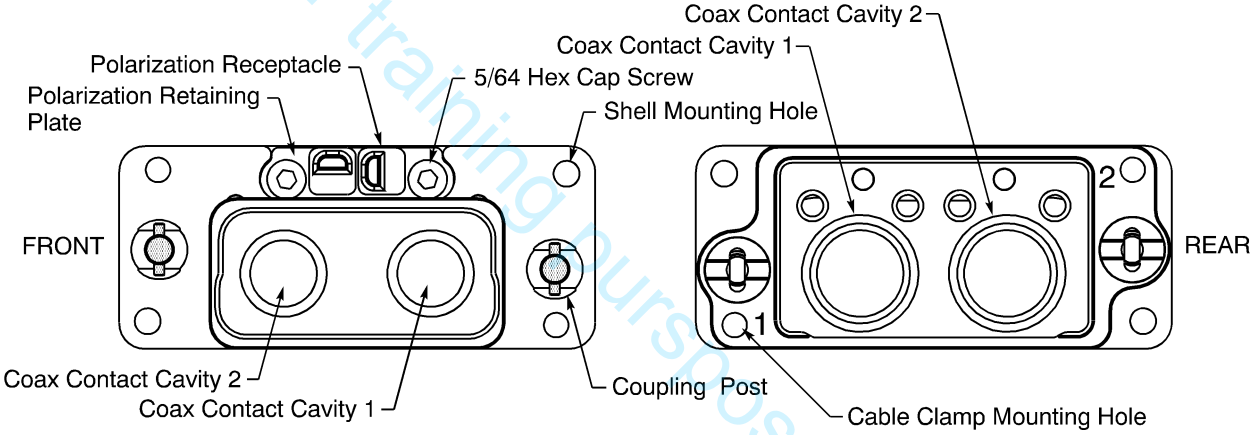

BACC65AV2C() RECEPTACLE
Figure 16

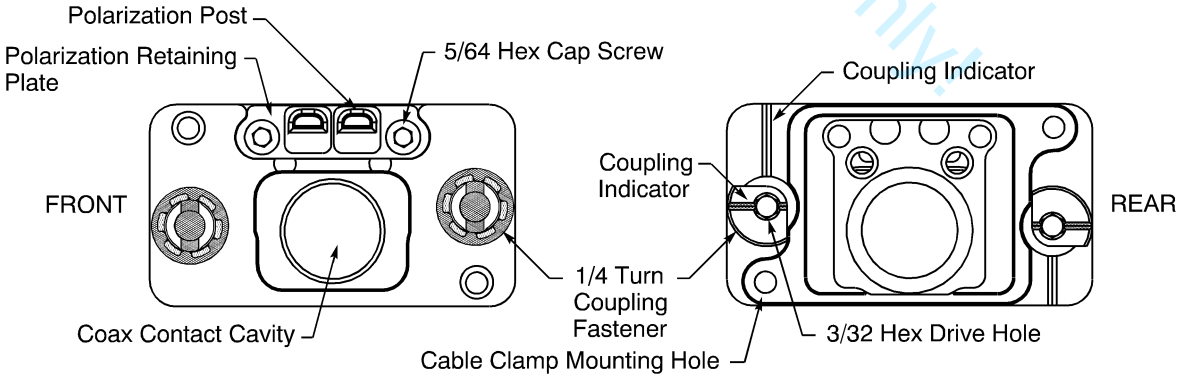

BACC65AW1C() PLUG
Figure 17

For training purposes only.

BOEING PROPRIETARY - Copyright © Unpublished Work - See title page for details

ASSEMBLY OF BACC65AN, BACC65AP, BACC65AV, AND BACC65AW CONNECTORS

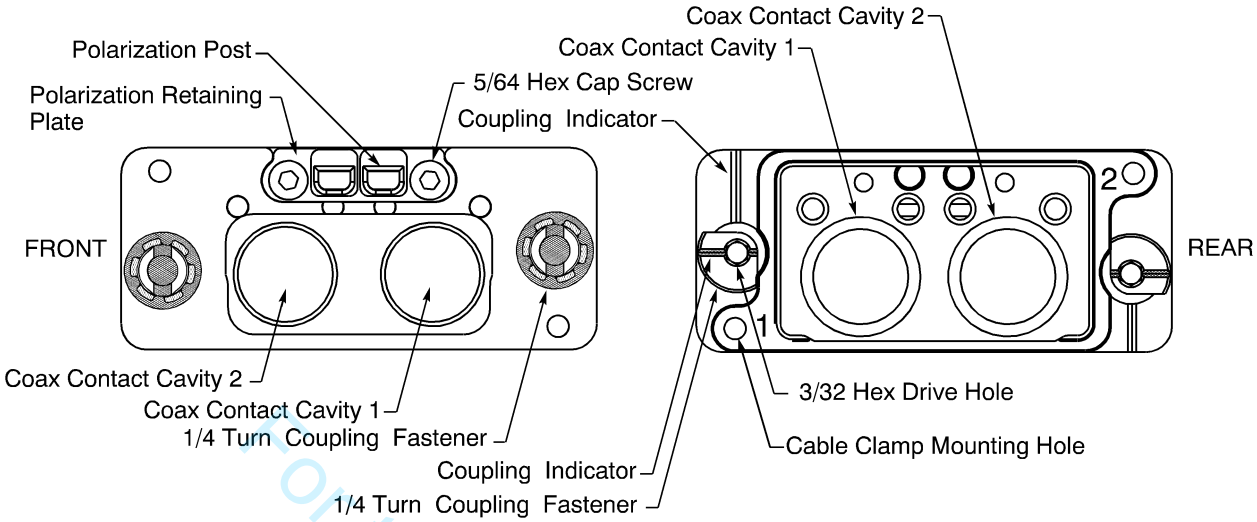

BACC65AW2C() PLUG
Figure 18

E. Connector Insert Part Numbers

Refer to Subject 20-74-02.

F. Size 2222, 2020, 1616, 1212, 0808, and 0508 Contact Part Numbers

Refer to Subject 20-74-02.

G. Ground Block Contact Part Numbers

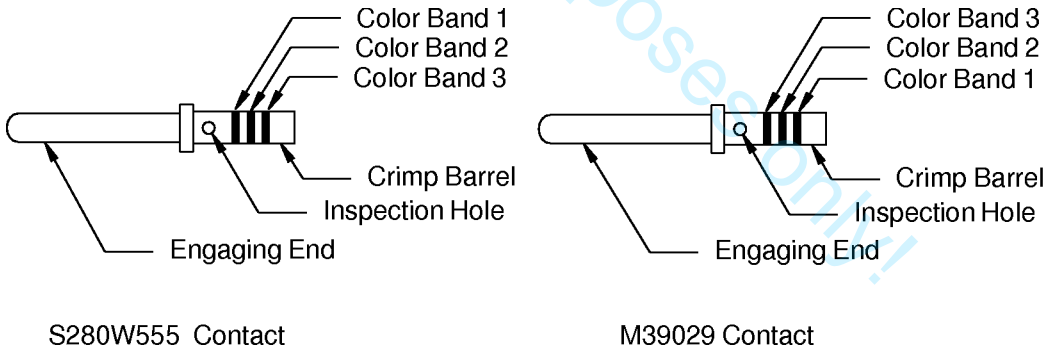

GROUND BLOCK CONTACTS
Figure 19

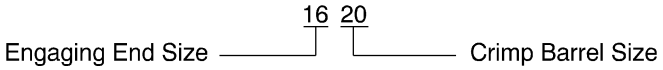

EXAMPLE OF CONTACT SIZE
Figure 20

For training purposes only!

BOEING PROPRIETARY - Copyright © Unpublished Work - See title page for details

Table 7
GROUND BLOCK CONTACT PART NUMBERS

Contact Size	Contact Type	Part Number	Supplier	Color Code	
				Band	Color
1620	Pin	M39029/1-101	QPL	1	Brown
				2	Black
				3	Brown
		S280W555-920	Boeing	1	Red
				2	Red
				3	Red
1618	Pin	S280W555-918	Boeing	1	Red
				2	White
				3	Red

Table 8
APPROVED SUPPLIERS OF BOEING STANDARD GROUND BLOCK CONTACTS

Contact	Supplier
S280W555-918	FCI/Burndy
	Tri Star
S280W555-920	FCI/Burndy
	Tri Star

H. Size 3, Size 5 and Size 8 Coax Contact Part Numbers

This paragraph gives the part numbers for the size 3 coax contacts for BACC65AV and BACC65AW connectors. For the size 5 and size 8 coax contact part numbers, refer to Subject 20-74-02.

For training purposes only!

BOEING PROPRIETARY - Copyright © Unpublished Work - See title page for details

Table 9
SIZE 3 COAX CONTACT PART NUMBERS

Coax Contact		Boeing Standard	Coax Cable
Size	Type		
3	Pin	BACC47FP0F	BMS 13-65 Type 0F
		BACC47FP0G	BMS 13-65 Type 0G
		BACC47FP0H	BMS 13-65 Type 0H
		BACC47FP0J	BMS 13-65 Type 0J
		BACC47FP0K	BMS 13-65 Type 0K
	Socket	BACC47FR0F	BMS 13-65 Type 0F
		BACC47FR0G	BMS 13-65 Type 0G
		BACC47FR0H	BMS 13-65 Type 0H
		BACC47FR0J	BMS 13-65 Type 0J
		BACC47FR0K	BMS 13-65 Type 0K

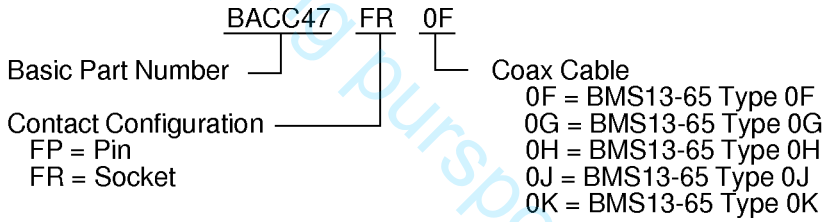

SIZE 3 COAX CONTACT PART NUMBER STRUCTURE
Figure 21

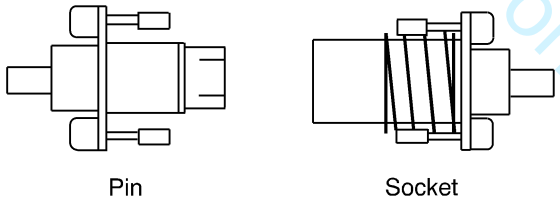

SIZE 3 COAX CONTACTS
Figure 22

Table 10
APPROVED SUPPLIERS OF BOEING STANDARD COAX CONTACTS

Coax Contact	Supplier
BACC47FP()	RadiaII
BACC47FR()	RadiaII

For training purposes only!

BOEING PROPRIETARY - Copyright © Unpublished Work - See title page for details

ASSEMBLY OF BACC65AN, BACC65AP, BACC65AV, AND BACC65AW CONNECTORS

I. Size 8 Twinax Contacts

Refer to Subject 20-74-02.

J. Size 8 Quadrax Contact Part Numbers

Refer to Subject 20-74-02.

K. Fiber Optic Contact Terminus Part Numbers

Refer to Subject 20-74-02.

L. Fiber Optic Alignment Sleeve Insert Part Numbers

Refer to Subject 20-74-02.

M. Strain Relief Backshell Part Numbers

For training purposes only!

Table 11
STRAIN RELIEF BACKSHELL PART NUMBERS

Boeing Standard	Shell Size	Configuration Angle	Strain Relief Description
BACC10LL1	1	Straight	Tie tab
BACC10LL2	2	Straight	Tie tab
BACC10LM1F	1	45 Degree	Tie tab
BACC10LM2F	2	45 Degree	Tie tab
BACC10LV2	2	Straight	Saddle clamp

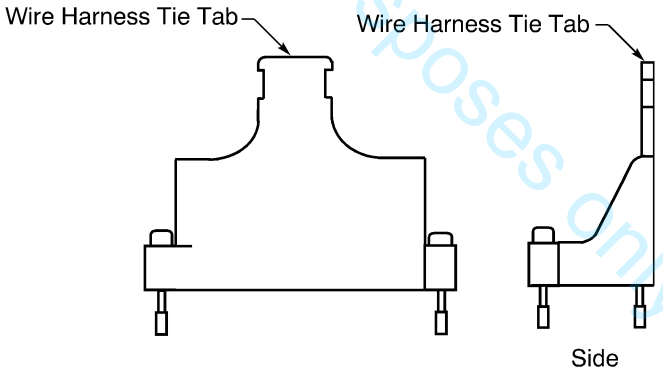

BACC10LL BACKSHELL
Figure 23

BOEING PROPRIETARY - Copyright © Unpublished Work - See title page for details

ASSEMBLY OF BACC65AN, BACC65AP, BACC65AV, AND BACC65AW CONNECTORS

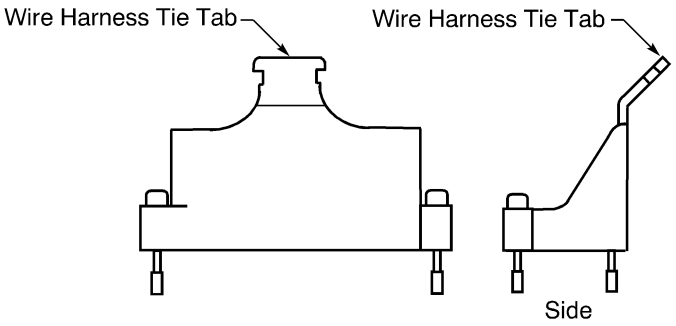

BACC10LM BACKSHELL
Figure 24

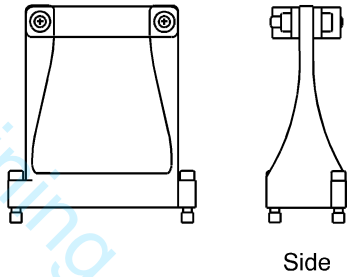

BACC10LV2 BACKSHELL
Figure 25

For training purposes only!

Table 12
APPROVED SUPPLIERS OF BOEING STANDARD STRAIN RELIEF BACKSHELLS

Boeing Standard	Supplier
BACC10LL()	RadiaII
BACC10LM()	RadiaII
BACC10LV()	RadiaII

N. EMI Backshell Part Numbers

Table 13
EMI BACKSHELL PART NUMBERS

Boeing Standard	Shell Size	Description	Reference
BACC10LH1	1	Straight	-
BACC10LH2	2	Straight	Figure 26
617924013	2	Straight	Figure 27
617927007	2	Straight	Figure 28

BOEING PROPRIETARY - Copyright © Unpublished Work - See title page for details

ASSEMBLY OF BACC65AN, BACC65AP, BACC65AV, AND BACC65AW CONNECTORS

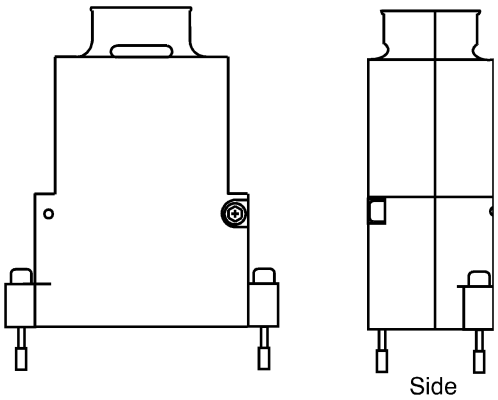

BACC10LH2 EMI BACKSHELL
Figure 26

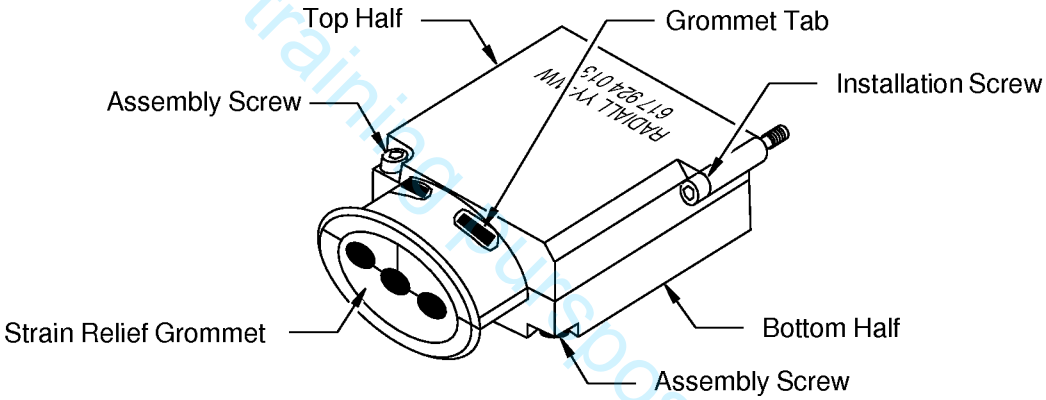

RADIALL 617924013 BACKSHELL
Figure 27

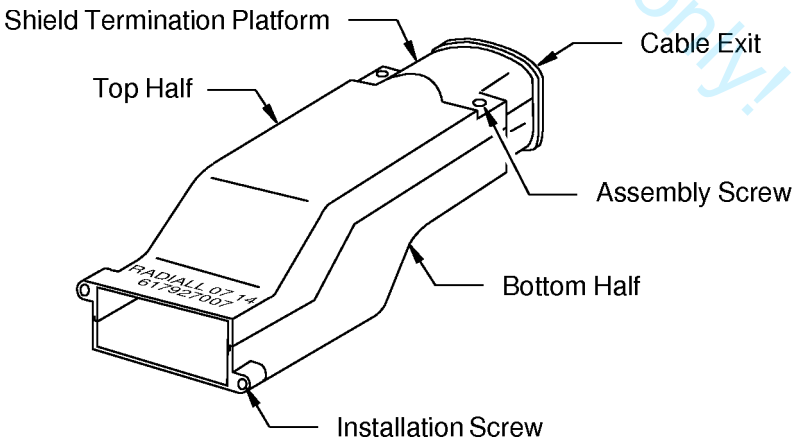

RADIALL 617927007 BACKSHELL
Figure 28

For training purposes only!

BOEING PROPRIETARY - Copyright © Unpublished Work - See title page for details

Table 14
APPROVED SUPPLIERS OF BOEING STANDARD EMI BACKSHELLS

Backshell	Supplier
BACC10LH()	Radiall
617924013	Radiall
617927007	Radiall

O. Ground Spring Part Numbers

Table 15
GROUND SPRING PART NUMBERS

Boeing Standard	Shell Size
BACC65AH1	2
BACC65AH2	1

For training purposes only!

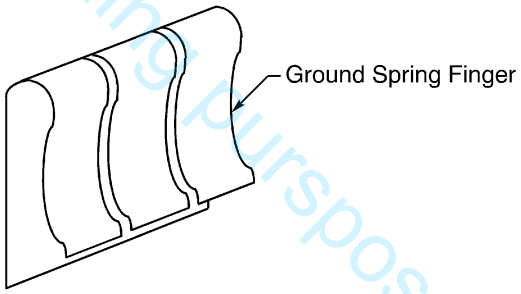

BACC65AH1 GROUND SPRING
Figure 29

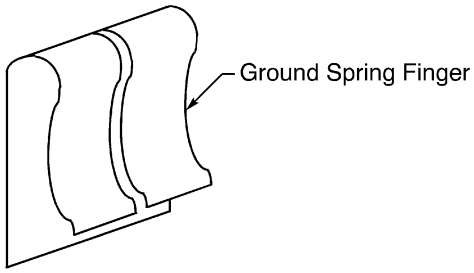

BACC65AH2 GROUND SPRING
Figure 30

BOEING PROPRIETARY - Copyright © Unpublished Work - See title page for details

Table 16
APPROVED SUPPLIERS OF BOEING STANDARD EMI GROUND SPRINGS

Ground Spring	Supplier
BACC65AH()	Radiall
	Jerrik

3. INSERT CONFIGURATIONS

A. BACI10AL, BACI10AM, and BACI10AP Connector Inserts

Refer to Subject 20-74-02.

4. CONNECTOR DISASSEMBLY

A. Connector Separation

Table 17
NECESSARY TOOLS

Tool	Type	Size (inch)
Driver	Allen Wrench	3/32
	Screwdriver, Hex	3/32

(1) Make a selection of a driver from Table 17.

NOTE: The driver can have a ball style end.

NOTE: A metric size hex tool is not applicable.

(2) Put the driver into the hex drive hole in one of the coupling fasteners on the rear of the plug connector. Refer to Figure 31.

For training purposes only!

BOEING PROPRIETARY - Copyright © Unpublished Work - See title page for details

ASSEMBLY OF BACC65AN, BACC65AP, BACC65AV, AND BACC65AW CONNECTORS

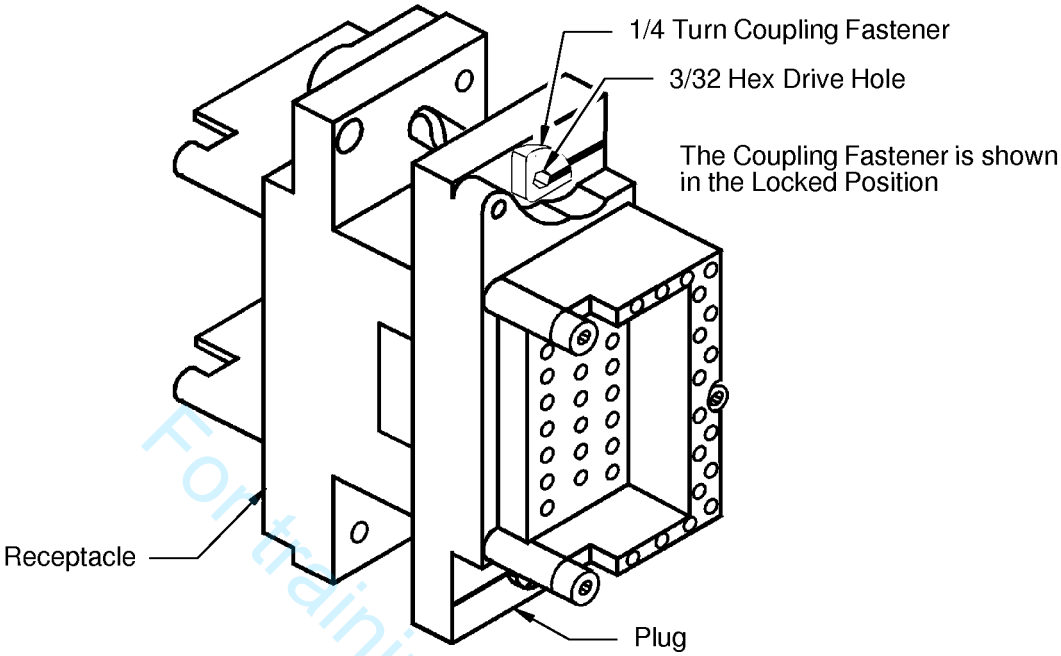

LOCATION OF THE COUPLING FASTENER HEX DRIVE HOLES
Figure 31

(3) Turn the coupling fastener with the driver in a counterclockwise direction 1/4 turn to the unlocked position. Refer to Figure 32 and Figure 33.

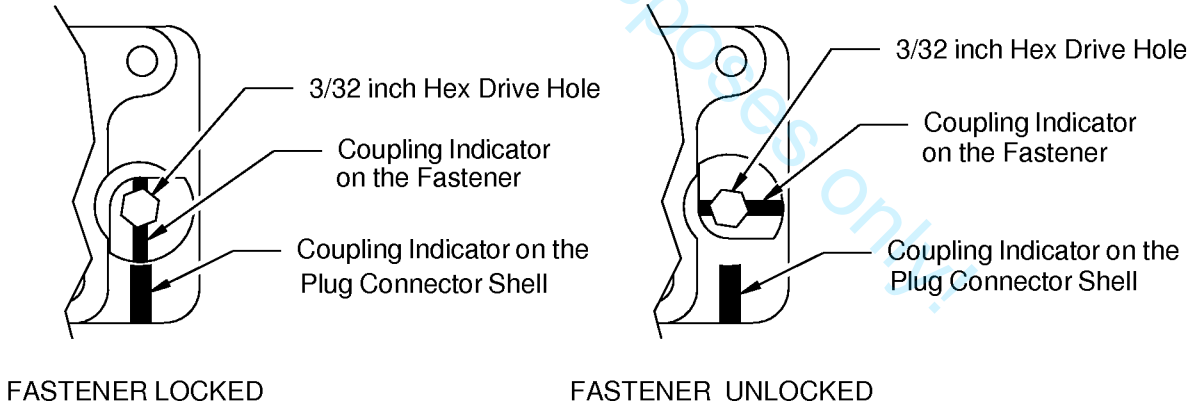

COUPLING FASTENER POSITIONS
Figure 32

For training purposes only.

BOEING PROPRIETARY - Copyright © Unpublished Work - See title page for details

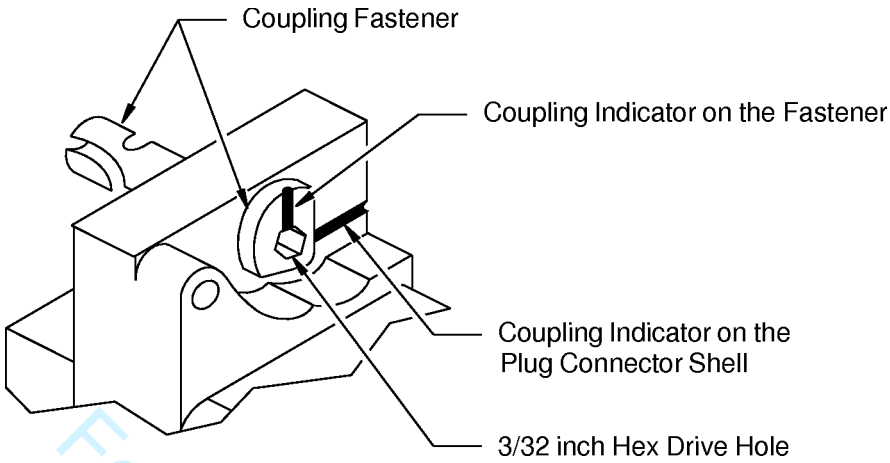

COUPLING FASTENER IN THE UNLOCKED POSITION
Figure 33

(4) Do Step (2) and Step (3) again for the other coupling fastener.

(5) Pull the plug straight away from the receptacle.

B. Removal of the Receptacle

Table 18
NECESSARY TOOLS

Tool	Type	Size (inch)
Driver	Phillips Head Screwdriver	-
	Socket Wrench	1/4

(1) Make a selection of a driver from Table 18.

(2) Remove the plastic tie straps or the wire harness ties that:
- Hold the wire harness to the structure
- Are less than 9 inches from the connector.

(3) Remove the two receptacle connector installation screws. Refer to Figure 34.

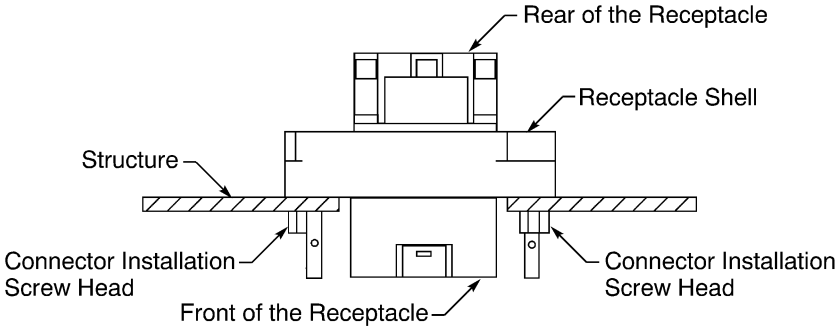

LOCATION OF THE INSTALLATION SCREWS
Figure 34

For training purposes only!

BOEING PROPRIETARY - Copyright © Unpublished Work - See title page for details

(4) Discard the two screws.

(5) Pull the receptacle shell from the structure.

C. Removal of the Fiber Optic Alignment Sleeve Insert

Refer to Subject 20-74-02.

D. Removal of the 1/4-Turn Connector Shell Coupling Fastener

(1) Make a selection of a razor blade or a different tool with a thin edge.

(2) Bend each of the brackets of the retention clip a small amount away from the shoulder of the coupling fastener. Refer to Figure 35.

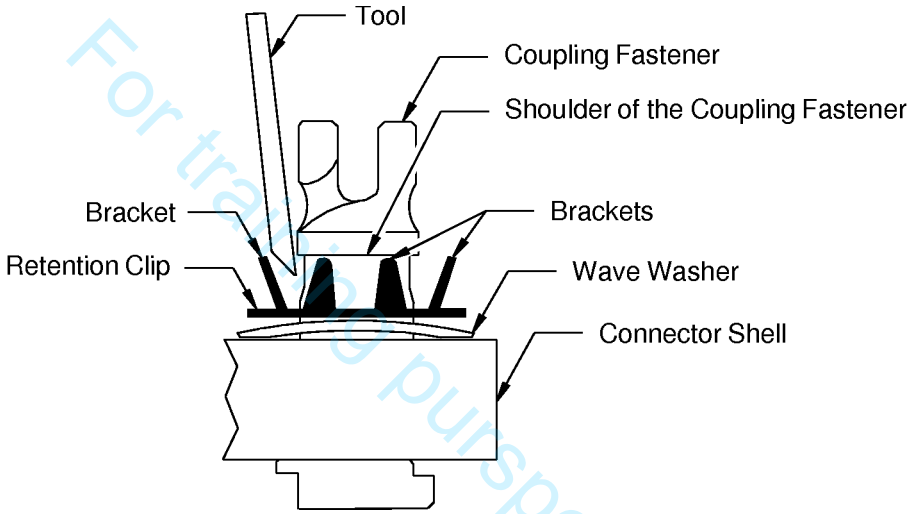

COUPLING FASTENER REMOVAL
Figure 35

(3) Pull the fastener from the connector shell.

(4) Discard the coupling fastener, the retention clip, and the wave washer.

E. Insert Removal

NOTE: It is not necessary to remove the insert contacts, or the strain relief clamp before the insert is removed.

Table 19
INSERT REMOVAL TOOLS

Tool	Part Number	Supplier
Insert Removal Tool	282 521 002	Radiall

(1) Make a selection of an insert removal tool from Table 19.

For training purposes only!

BOEING PROPRIETARY - Copyright © Unpublished Work - See title page for details

(2) If the connector has:
- An EMI backshell installed, remove the EMI backshell from the connector; refer to Paragraph 4.L.
- A strain relief clamp, remove the plastic tie strap or the wire harness tie from the clamp
- A ground block, remove the ground block contacts from the ground block; refer to Paragraph 4.G.

(3) From the rear of the connector, align the two ends of the removal tool with the shorter sides of the insert. Refer to Figure 36.

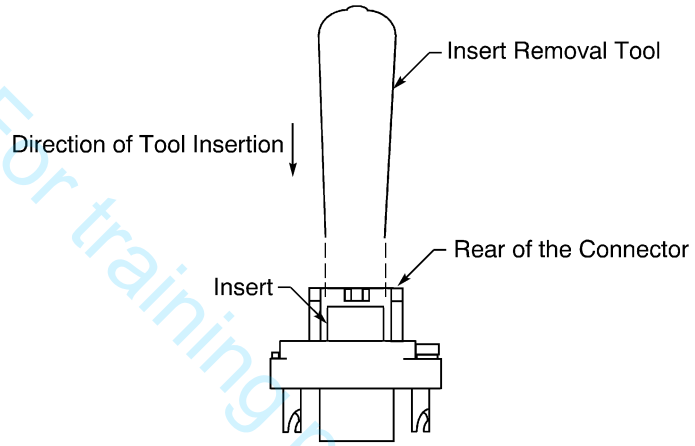

ALIGNMENT OF THE INSERT REMOVAL TOOL
Figure 36

(4) Carefully push the removal tool between the insert cavity and the insert.
Make sure to keep the tool aligned with the insert.

(5) Push the two sides of the tool at the same time into the connector.

(6) Pull the insert removal tool and the insert straight out of the connector. Refer to Figure 37.

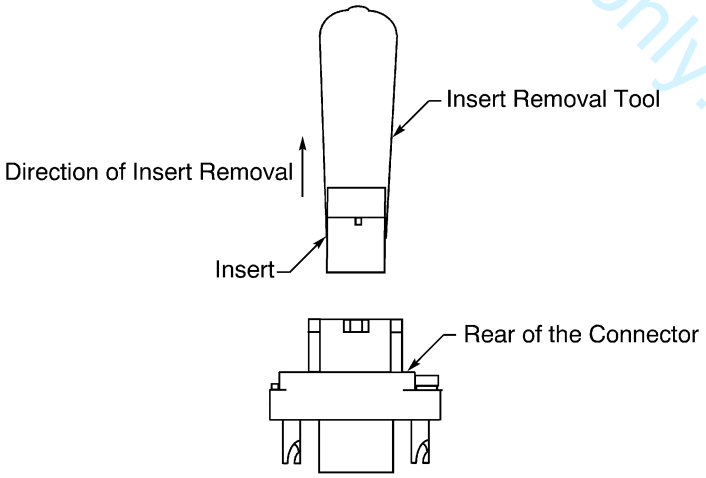

REMOVAL OF THE INSERT
Figure 37

For training purposes only!

BOEING PROPRIETARY - Copyright © Unpublished Work - See title page for details

F. Seal Plug and Seal Rod Removal

Refer to Subject 20-74-02.

G. Contact Removal

This paragraph gives the procedure to remove size 16 ground block contacts from the connector ground block.

Refer to:

- Subject 20-74-02. to remove contacts from the connector insert
- Paragraph 4.I. for the procedure to remove size 3 coax contacts from the connector.

Table 20
REMOVAL TOOLS FOR SIZE 16 GROUND BLOCK CONTACTS

Ground Block Contact Cavity Size	Removal Tool	
	Part Number	Color
16	ATR2080	-
	ATR2079	-
	M81969/14-11	White
	RRX20B	-

(1) Make a selection of a contact removal tool from Table 20 for size 16 ground block contacts.

CAUTION: DO NOT USE A REMOVAL TOOL THAT HAS A DEFECT. A REMOVAL TOOL THAT HAS A DEFECT CAN CAUSE DAMAGE TO THE GROMMET OR THE RETENTION CLIP.

(2) Remove the plastic tie straps or the wire harness ties that are less than 6 inches from the connector.

(3) Put the tip of the removal tool on the wire near the ground block.

(4) Axially align the removal tool and the contact cavity.

(5) Carefully push the removal tool straight into the contact cavity until it stops.

(6) Carefully pull the wire and the removal tool straight out of the contact cavity at the same time.

(7) If the contact is not released:

(a) Pull the contact removal tool out of the contact cavity.

(b) Turn the removal tool approximately 90 degrees.

(c) Do Step (3) through Step (6) again.

H. Removal of a Fiber Optic Contact Terminus

Refer to the procedures for Contact Terminus Removal in Subject 20-12-21.

For training purposes only!

BOEING PROPRIETARY - Copyright © Unpublished Work - See title page for details

ASSEMBLY OF BACC65AN, BACC65AP, BACC65AV, AND BACC65AW CONNECTORS

I. Size 3 Coax Contact Removal

Table 21
NECESSARY TOOLS

Tool	Type	Size (inch)
Driver	Allen Wrench	5/64
	Screwdriver, Hex	5/64
Pliers	-	-

(1) Make a selection of these tools from from Table 21.
- A driver
- A pair of pliers.

(2) Remove the plastic tie straps or the wire harness ties that are less than 6 inches from the connector.

(3) Disengage the two screws on the coax contact assembly from the connector shell. Refer to Figure 38.

NOTE: The two screws on the coax contact assembly are captivated and cannot be removed from the coax contact assembly.

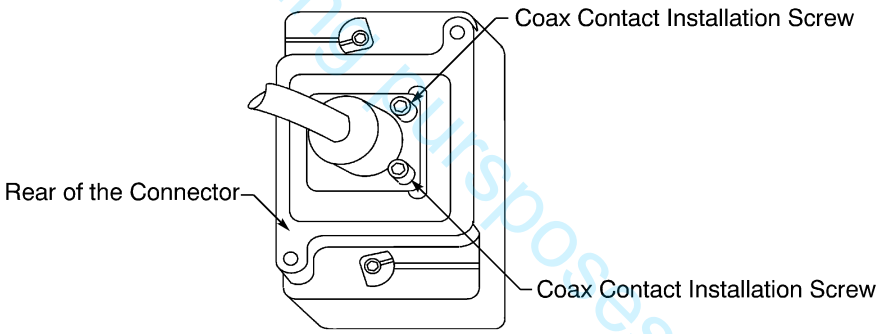

LOCATION OF THE COAX CONTACT INSTALLATION SCREWS
Figure 38

(4) Pull on the head of one of the screws on the rear of the coax contact assembly with the pliers.

NOTE: Make sure the threads of the screws are completely disengaged from the connector shell before they are removed.

NOTE: A satisfactory alternative is to push on the engaging end of the coax contact with the end of a finger, or a 0.4 inch maximum diameter blunt plastic tool to move the contact out of the rear of the connector.

CAUTION: DO NOT PULL ON THE COAX CABLE TO REMOVE THE COAX CONTACT FROM THE CONNECTOR SHELL. DAMAGE TO THE COAX CABLE TERMINATION, OR DAMAGE TO THE COAX CONTACT CAN OCCUR.

For training purposes only!

BOEING PROPRIETARY - Copyright © Unpublished Work - See title page for details

J. EMI Ground Spring Removal

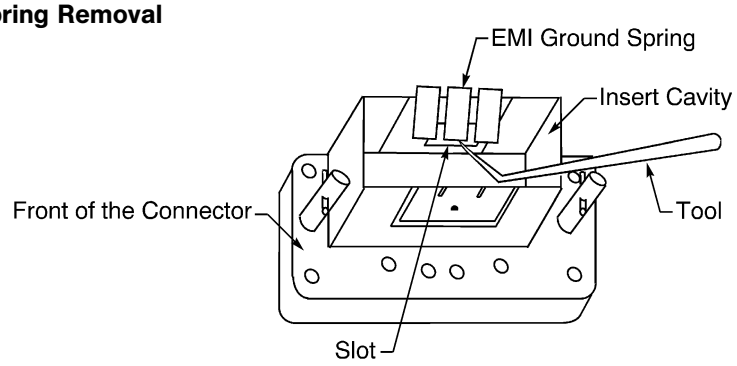

EMI GROUND SPRING REMOVAL
Figure 39

Refer to Figure 39.

(1) Make a selection of a tool with a small sharp point at a right angle to the handle.

NOTE: An awl is a satisfactory tool.

(2) For a ground spring with two fingers, carefully put the tip of the tool between the inner wall of the insert cavity and the bottom of the ground spring between the two fingers.

(3) For a ground spring with three fingers, carefully put the tip of the tool between the inner wall of the insert cavity and the bottom of the middle finger of the ground spring.

(4) Push the tip of the tool through the slot against the ground spring latch that is behind the ground spring fingers.

(5) Pull the ground spring away from the insert cavity.

K. Strain Relief Backshell Removal

Table 22
BACKSHELL REMOVAL TOOLS

Tool	Type	Size (inch)
Driver	Allen Wrench	5/64
	Screwdriver, Hex	5/64

(1) Make a selection of a driver from Table 22.

(2) For backshells with a tie tab, remove the plastic tie strap or the wire harness tie from the tie tab.

(3) For backshells with a saddle clamp, remove the saddle clamp.

(4) If the inserts are installed and have wired contacts, remove the inserts from the connector. Refer to Paragraph 4.E.

(5) If the connector has a ground block, and the ground block has contacts that are installed, remove the contacts from the ground block. Refer to Paragraph 4.G.

(6) Disengage the threads of the backshell installation screws. Refer to Figure 40.

NOTE: The screws are captivated and cannot be removed from the strain relief clamp.

For training purposes only!

BOEING PROPRIETARY - Copyright © Unpublished Work - See title page for details

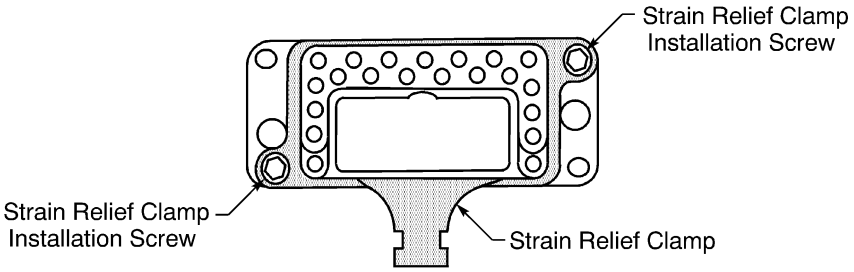

LOCATION OF BACKSHELL INSTALLATION SCREWS
Figure 40

(7) Pull the backshell from the connector shell. Refer to Figure 41.

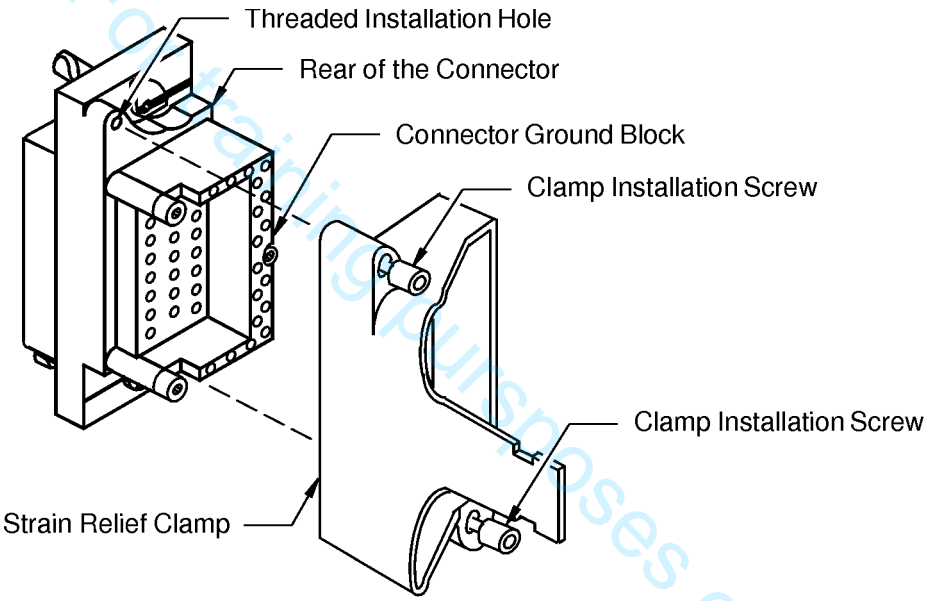

BACKSHELL REMOVAL
Figure 41

For training purposes only!

L. Removal of the BACC10LH Backshell

Table 23
EMI BACKSHELL REMOVAL TOOLS

Tool	Type	Size (inch)
Driver	Allen Wrench	5/64
	Screwdriver, Hex	5/64
Diagonal Cutter	-	-
Knife	-	-

(1) Remove the heat shrinkable sleeve from the wire harness. Refer to Figure 42.

BOEING PROPRIETARY - Copyright © Unpublished Work - See title page for details

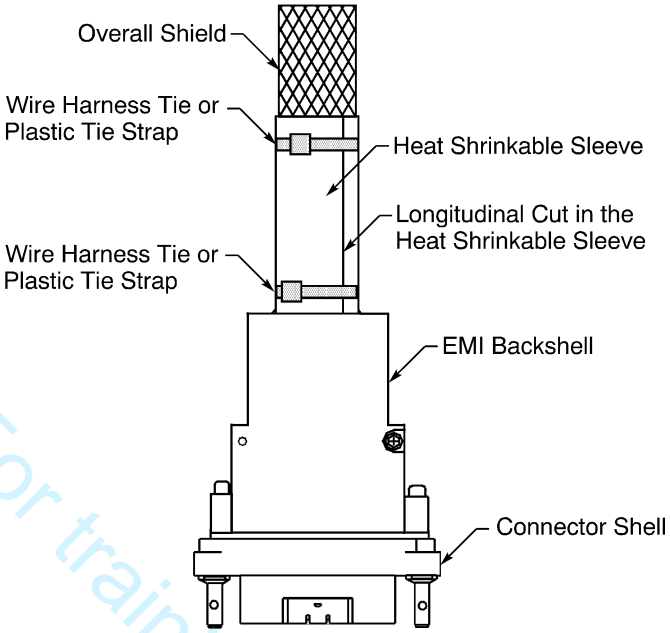

REMOVAL OF THE HEAT SHRINKABLE SLEEVE
Figure 42

(a) If the heat shrinkable sleeve has tie straps or wire harness ties, cut them off.

(b) Carefully make a longitudinal cut in the heat shrinkable sleeve from one end to the other end.

CAUTION: DO NOT CUT INTO THE STRANDS OF THE OVERALL SHIELD OR OTHER COMPONENTS OF THE WIRE HARNESS. DAMAGE TO THE SHIELD OR COMPONENTS CAN OCCUR.

(c) Remove the heat shrinkable sleeve from the wire harness.

(2) Remove the tape at the end of the overall shield. Refer to Figure 43.

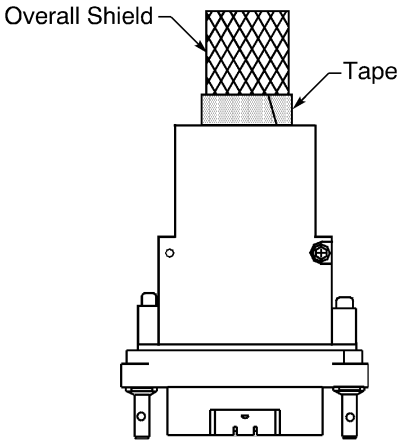

REMOVAL OF THE TAPE
Figure 43

For training purposes only!

BOEING PROPRIETARY - Copyright © Unpublished Work - See title page for details

(3) Make a selection of a pair of diagonal cutters from Table 23.

(4) Remove the shield terminator band from the overall shield. Refer to Figure 44.

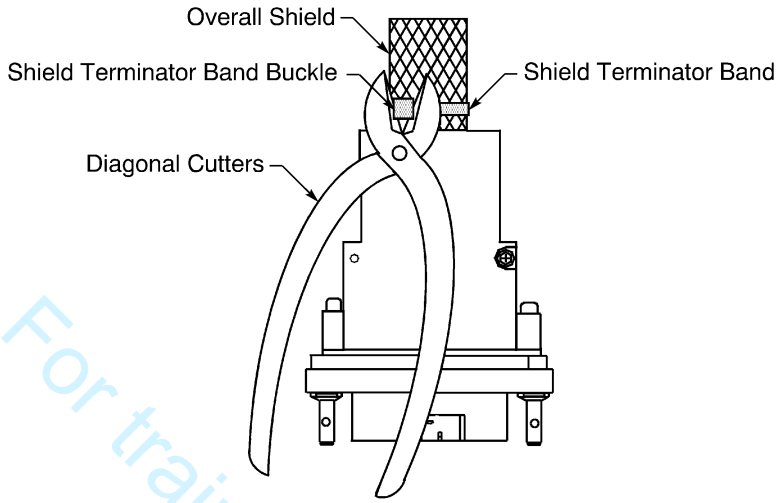

REMOVAL OF THE SHIELD TERMINATOR BAND FROM THE OVERALL SHIELD
Figure 44

(a) Hold the buckle of the shield terminator band with the cutters.

(b) Rotate the cutters and lift the buckle of the band away from the backshell until the buckle releases or the band breaks.

(c) Remove the band.

(5) Push the overall shield away from the band termination platform.

(6) Remove the shield terminator band from the shield ground wires on the band termination platform. Refer to Figure 45.

For training purposes only!

BOEING PROPRIETARY - Copyright © Unpublished Work - See title page for details

ASSEMBLY OF BACC65AN, BACC65AP, BACC65AV, AND BACC65AW CONNECTORS

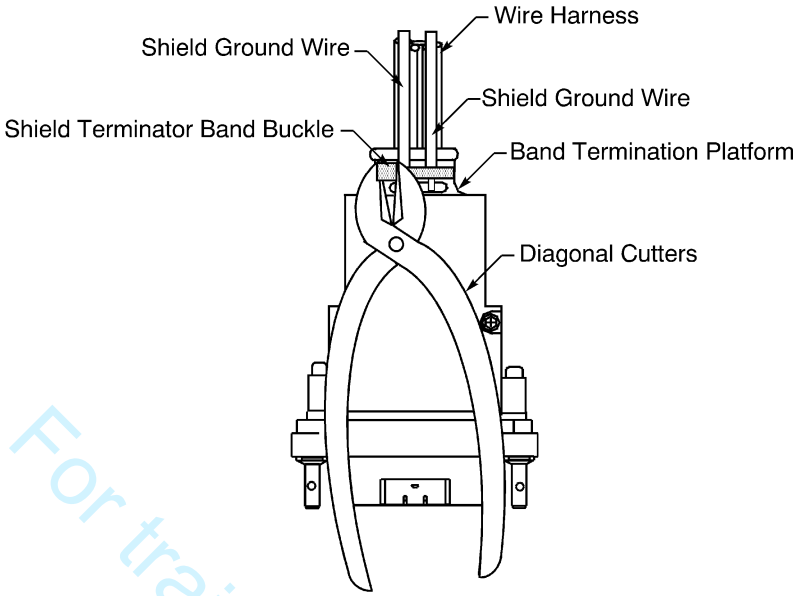

REMOVAL OF THE SHIELD TERMINATOR BAND FROM THE SHIELD GROUND WIRES
Figure 45

(a) Hold the buckle of the shield terminator band with the cutters.

(b) Rotate the cutters and lift the buckle of the band away from the backshell until the buckle releases or the band breaks.

(c) Remove the band.

(7) Make a selection of a driver from Table 23.

(8) Disengage the threads of the two backshell assembly screws on each side of the EMI backshell. Refer to Figure 46.

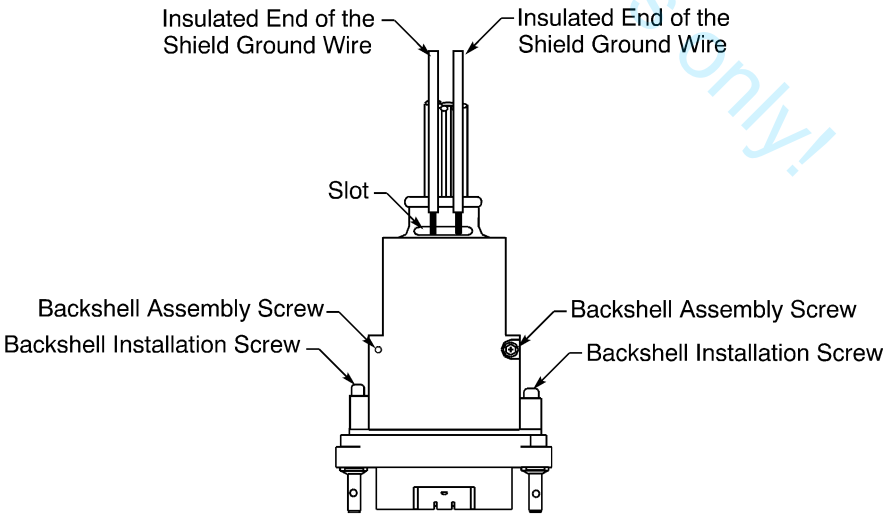

LOCATION OF OF THE BACKSHELL ASSEMBLY AND INSTALLATION SCREWS
Figure 46

For training purposes only!

BOEING PROPRIETARY - Copyright © Unpublished Work - See title page for details

(9) Disengage the threads of the two backshell installation screws on each side of the EMI backshell. Refer to Figure 46.

(10) Remove the ends of the shield ground wires from each half of the EMI backshell. Refer to Figure 46.

(a) Carefully pull one of the shield ground wires through the slot in the EMI backshell.

(b) If the insulation on the end of the shield ground wire does not go through the slot, remove the insulation from the shield ground wire.

(c) Do Step (a) and Step (b) for each shield ground wire.

M. Disassembly of the Radiall 617924013 Backshell

Table 24
NECESSARY TOOLS

Tool	Size (inch)	Supplier
Screw Bit, Hex	5/64	An available source
Screwdriver, Hex	5/64	An available source

(1) Make a selection of these tools from Table 24:

- A 5/64 hex screw bit
- A 5/64 hex screwdriver.

(2) Disengage the threads of each backshell installation screw and the applicable backshell installation hole in the connector shell. Refer to Figure 47.

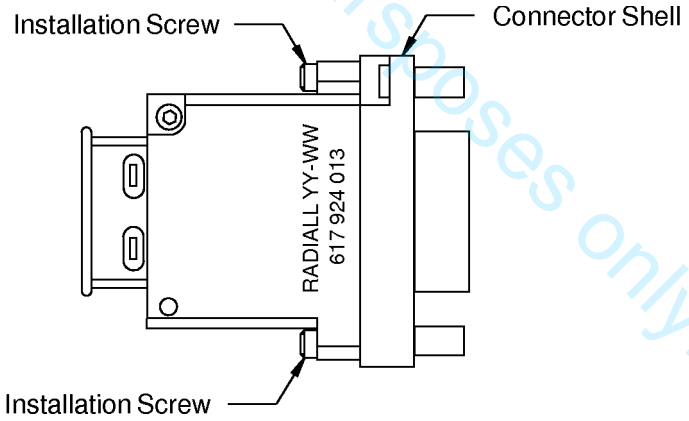

REMOVAL OF THE BACKSHELL INSTALLATION SCREWS
Figure 47

(3) Remove the two backshell assembly screws at the rear of the backshell. Refer to Figure 48.

For training purposes only!

BOEING PROPRIETARY - Copyright © Unpublished Work - See title page for details

ASSEMBLY OF BACC65AN, BACC65AP, BACC65AV, AND BACC65AW CONNECTORS

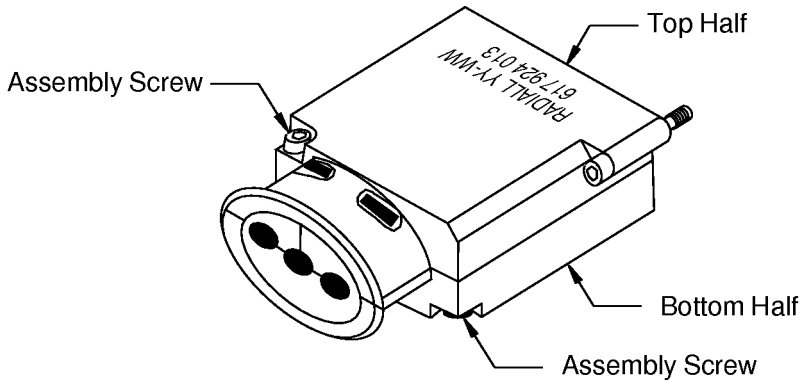

BACKSHELL DISASSEMBLY
Figure 48

For training purposes only!

(4) Remove the top half of the backshell from the bottom half.

(5) Carefully pull each wire from the applicable wire slot through the slit of the grommet. Make sure that lateral force is not applied to the contact assembly in the insert.

CAUTION: IF TOO MUCH LATERAL FORCE IS APPLIED TO A CONTACT ASSEMBLY IN THE INSERT, DAMAGE TO THE INSERT CAN OCCUR.

N. Disassembly of the Radiall 617927007 Backshell

(1) From the rear of the connector, remove the two backshell installation screws. Refer to Figure 49.

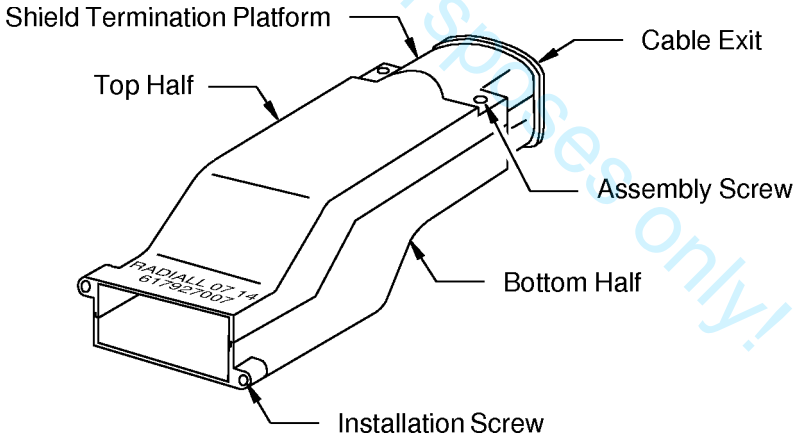

LOCATION OF THE BACKSHELL INSTALLATION SCREWS
Figure 49

(2) Remove the two backshell assembly screws near the shield termination platform. Refer to Figure 49.

(3) Remove the top half of the backshell.

(4) Remove the two strain relief installation screws that hold the saddle bar on the strain relief grommet inside the backshell. Refer to Figure 50.

BOEING PROPRIETARY - Copyright © Unpublished Work - See title page for details

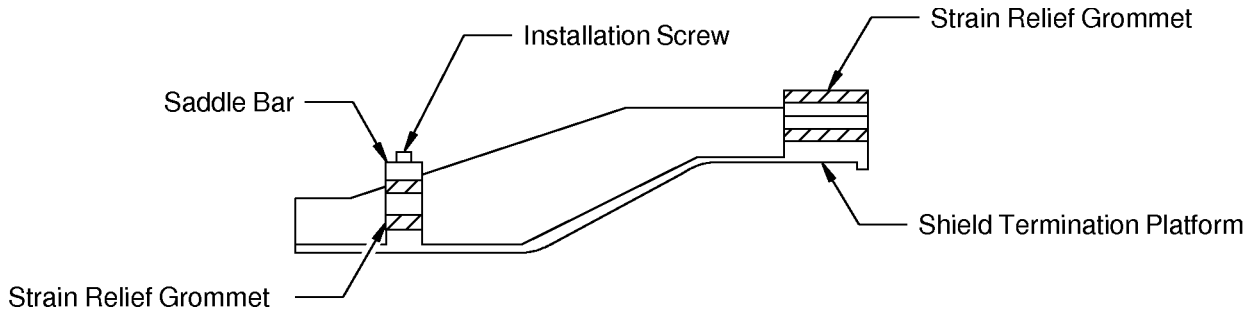

BACKSHELL DISASSEMBLY
Figure 50

(5) Remove the saddle bar from the strain relief grommet.

5. CONNECTOR ASSEMBLY

A. Shield Ground Wire Assembly

This paragraph gives the procedure to assemble a shield ground wire and a contact for installation in:

- The connector ground block
- The connector insert.

For the procedure to assemble the shield ground wires for:

- Raychem 55A6160-() cable, refer to Paragraph 5.C.
- BMS13-60 Type 27 Class 1 wire, refer to Paragraph 5.D.
- The termination of the shield at the EMI backshell, refer to Paragraph 5.B.

(1) Remove 2.5 inches ±0.1 inch of the cable jacket from the end of the cable. Refer to Figure 51.

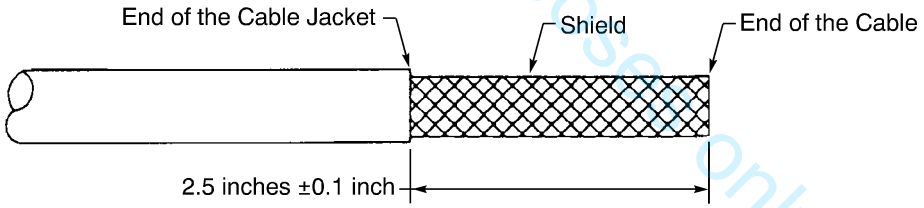

CABLE JACKET REMOVAL
Figure 51

For training purposes only!

BOEING PROPRIETARY - Copyright © Unpublished Work - See title page for details

(2) Assemble an insulated shield ground wire. Refer to Subject 20-10-15.

NOTE: The shield ground wire must have the same size as the crimp barrel of the applicable contact. Refer to:

- Table 7 for the ground block contact
- Subject 20-74-02 for the insert contact.

Make sure that:

- The shield ground wire assembly components are applicable for the shield material of the wire
- The length of the shield ground wire is 2.5 inches minimum
- The free end of the shield ground wire is pointed forward to the end of the cable.

CAUTION: A SHIELD GROUND WIRE ASSEMBLY WITH A SOLDER SLEEVE IS NOT APPLICABLE FOR A CABLE OR A WIRE WITH A SHIELD THAT HAS NICKEL PLATED CONDUCTORS. UNSATISFACTORY PERFORMANCE OF THE SHIELD TERMINATION CAN OCCUR.

(3) Remove the unwanted length from the end of the shield ground wire and the wires of the cable. Refer to Figure 52.

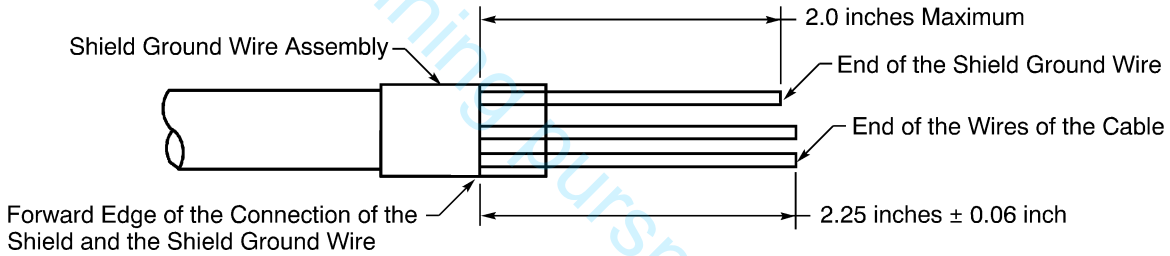

LENGTH OF THE SHIELD GROUND WIRE AND THE WIRES OF THE CABLE
Figure 52

NOTE: The connection of the shield and the shield ground wire can be:

- The melted solder ring of a solder sleeve
- A mechanical ferrule
- An RSK Shield-Kon.

(a) Remove the necessary length from the end of the shield ground wire to make the distance from the forward edge of the connection to the end of the shield ground wire equal to 2.0 inches maximum.

(b) Remove the necessary length from the end of the each wire of the cable to make the distance from the forward edge of the connection to the end of the wire equal to 2.25 inches ±0.06 inch.

(4) Assemble the specified contact on the end of the shield ground wire.

For the assembly of:

- A ground block contact, refer to Paragraph 5.F.
- An insert contact, refer to Paragraph 5.E.

B. Shield Ground Wire Assembly for Shield Termination at the EMI Backshell

(1) Remove 2.50 inches ±0.1 inch of the cable jacket from the end of the cable. Refer to Figure 53.

For training purposes only!

BOEING PROPRIETARY - Copyright © Unpublished Work - See title page for details

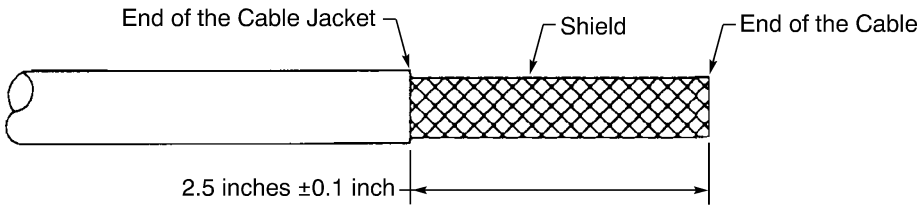

CABLE PREPARATION
Figure 53

(2) Assemble an uninsulated shield ground wire. Refer to Subject 20-10-15 and Figure 54.

Make sure that:

- The size of the shield ground wire is AWG 20
- The length of the shield ground wire is 5 inches minimum
- The shield ground wire is pointed back away from the end of the cable.

CAUTION: A SHIELD GROUND WIRE ASSEMBLY WITH A SOLDER SLEEVE IS NOT APPLICABLE FOR A CABLE OR A WIRE WITH A SHIELD THAT HAS NICKEL PLATED CONDUCTORS. UNSATISFACTORY PERFORMANCE OF THE SHIELD TERMINATION CAN OCCUR.

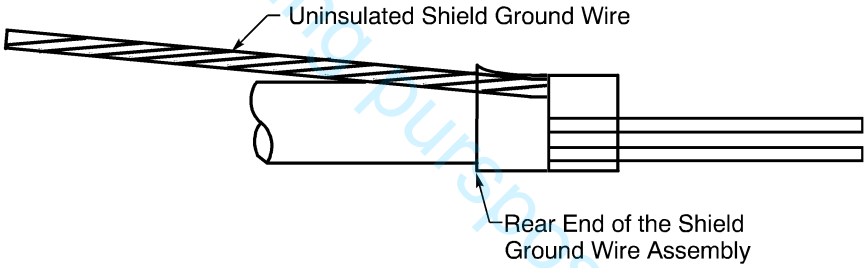

SHIELD GROUND WIRE CONFIGURATION
Figure 54

For training purposes only!

C. Shield Ground Wire Assembly for Raychem 55A6160-() Cable

This paragraph gives the procedure to assemble the shield ground wires and contacts for installation in:

- The connector ground block
- The connector insert.

For the procedure to assemble the shield ground wires for:

- Wire or cable that has one shield, refer to Paragraph 5.A.
- BMS13-60 Type 27 Class 1 wire, refer to Paragraph 5.D.

Table 25
NECESSARY PARTS

Part	Boeing Standard	Shield Ground Wire Size (AWG)
Solder Sleeve with an integral wire	BACS13CT3C	20

BOEING PROPRIETARY - Copyright © Unpublished Work - See title page for details

ASSEMBLY OF BACC65AN, BACC65AP, BACC65AV, AND BACC65AW CONNECTORS

(1) Make a selection of a solder sleeve with an integral wire from Table 25.

NOTE: Two solder sleeves are necessary.

Refer to Subject 20-10-15 for approved suppliers of Boeing standard solder sleeves.

(2) Prepare the cable for termination of the outer shield. Refer to Figure 55 and Subject 20-00-15.

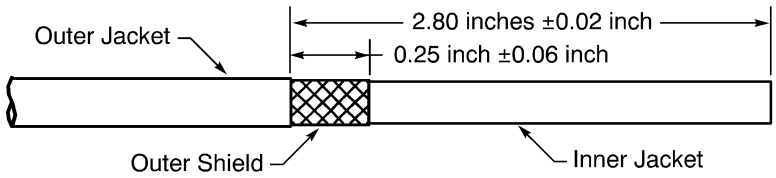

OUTER JACKET AND OUTER SHIELD REMOVAL
Figure 55

(a) Remove 2.80 inches ±0.02 inch of the outer jacket from the end of the cable.

(b) Remove the necessary length of the shield to make the distance from the end of the jacket to the end of the shield equal to 0.25 inch ±0.06 inch.

(3) Assemble the shield ground wire of the outer shield. Refer to Figure 56.

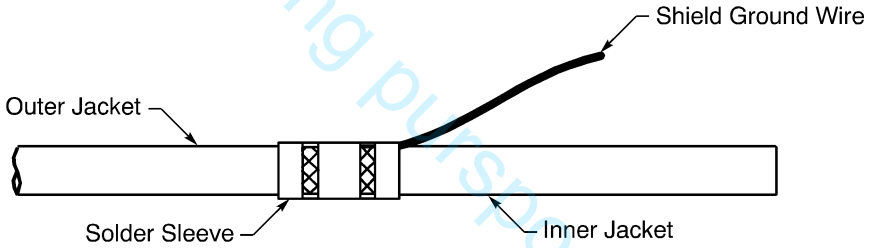

TERMINATION OF THE OUTER SHIELD
Figure 56

(a) Put the solder sleeve on the wire or cable.

Make sure that:

- The free end of the shield ground wire is pointed forward to the end of the cable
- The large end of the solder sleeve is put on the wire or cable first
- The inner edge of the rear seal ring is aligned with the end of the outer jacket.

(b) Shrink the solder sleeve into its position.

Make sure that:

- The solder sleeve stays in the correct position
- A minimum of 75 percent of the indicator ring on top of the solder ring is melted.

(c) Remove the necessary length of the shield ground wire to make the distance from the forward edge of the solder ring to the end of the wire equal to 2.0 inches maximum.

(4) Prepare the cable for termination of the inner shield. Refer to Figure 57 and Subject 20-00-15.

For training purposes only!

BOEING PROPRIETARY - Copyright © Unpublished Work - See title page for details

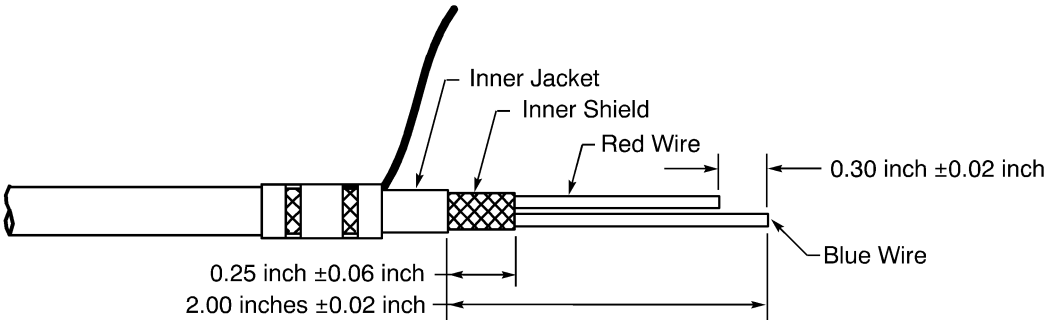

INNER JACKET AND INNER SHIELD REMOVAL
Figure 57

(a) Remove 2.00 inches ±0.02 inch of the inner jacket from the end of the cable.

(b) Remove the necessary length of the inner shield to make the distance from the end of the shield to the end of the jacket equal to 0.25 inch ±0.06 inch.

(c) Remove the necessary length of the red wire to make the distance from the end of the red wire to the end of the blue wire equal to 0.30 inch ±0.02 inch.

(d) Remove 0.21 inch ±0.02 inch of insulation from the end of the blue wire. Refer to Subject 20-00-15.

(5) Assemble the shield ground wire of the inner shield. Refer to Figure 58.

Make sure that:

- The free end of the shield ground wire is pointed forward to the end of the cable
- The large end of the solder sleeve is put on the wire or cable first
- The inner edge of the rear seal ring is aligned with the end of the jacket.

For training purposes only!

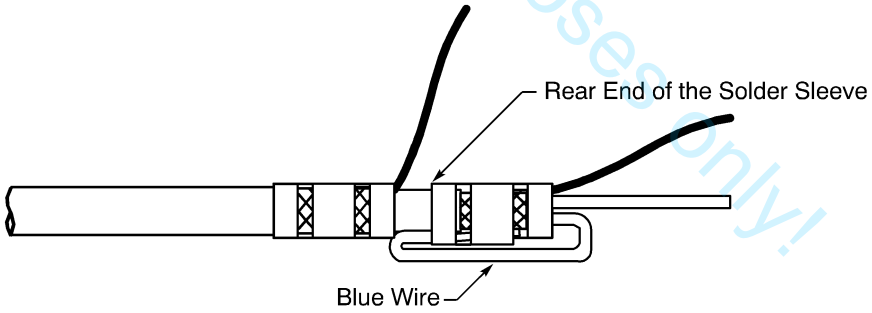

TERMINATION OF THE INNER SHIELD
Figure 58

(a) Fold the blue wire back and put the end of the wire between the inner shield and the rear end of the solder sleeve.

Make sure the center of the conductor is aligned with the solder ring of the solder sleeve.

CAUTION: THE STRANDS OF THE WIRE MUST NOT GO INTO THE SHIELD OF THE CABLE. A SHORT CIRCUIT BETWEEN THE CONDUCTOR OF THE WIRE CAN OCCUR.

(b) Shrink the solder sleeve into its position.

BOEING PROPRIETARY - Copyright © Unpublished Work - See title page for details

Make sure that:

- The solder sleeve stays in the correct position
- A minimum of 75 percent of the indicator ring on top of the solder ring is melted.

(c) Remove the necessary length of the shield ground wire to make the distance from the forward edge of the solder ring to the end of the wire equal to 2.0 inches maximum.

(6) Assemble the specified contact on the end of the shield ground wire.

For the assembly of:

- A ground block contact, refer to Paragraph 5.F.
- An insert contact, refer to Paragraph 5.E.

D. Shield Ground Wire Assembly for BMS13-60 Type 27 Class 1 Wire

For training purposes only.

Table 26
WIRE TYPE CODES

Cable Description	Wire Type Code
BMS13-60 Type 27 Class 1	M1

This paragraph gives the procedure to assemble shield ground wires and contacts for installation in:

- The connector ground block
- The connector insert.

For the procedure to assemble the shield ground wires for:

- Wire or cable that has one shield, refer to Paragraph 5.A.
- Raychem 55A6160-() cable, refer to Paragraph 5.C.

Table 27
MECHANICAL FERRULE PART NUMBERS

Shield	Ferrule Type	Boeing Standard
Inner	Inner	BACS13S071BNP
	Outer	BACS13S149CNP
Outer	Inner	BACS13S090BNP
	Outer	BACS13S175CNP

NOTE: Refer to Subject 20-10-15 for approved suppliers of Boeing standard mechanical ferrules.

NOTE: Refer to the D-590 Boeing to Vendor Cross Reference Index for the supplier part numbers for the BACS13S ferrules.

Table 28
NECESSARY MATERIALS

Material	Part Number	Supplier
Sleeve, Heat Shrinkable	SAE-AMS-DTL-23053/12 Class 2	QPL
	SAE-AMS-DTL-23053/12 Class 5	QPL
	TFE-2X	Zeus
	TFE-4X	Zeus

BOEING PROPRIETARY - Copyright © Unpublished Work - See title page for details

ASSEMBLY OF BACC65AN, BACC65AP, BACC65AV, AND BACC65AW CONNECTORS

(1) Prepare the cable for the termination of the outer shield. Refer to Figure 59 and Subject 20-00-15.

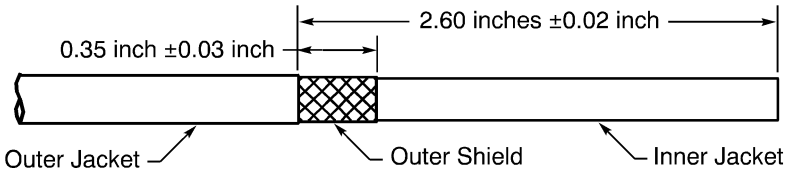

OUTER JACKET AND OUTER SHIELD REMOVAL
Figure 59

(a) Remove 2.60 inches ±0.02 inch of the outer jacket from the end of the cable.

(b) Remove the necessary length of the outer shield to make the distance from the end of the jacket to the end of the shield equal to 0.35 inch ±0.03 inch.

(2) Assemble the shield ground wire of the outer shield. Refer to Figure 60.

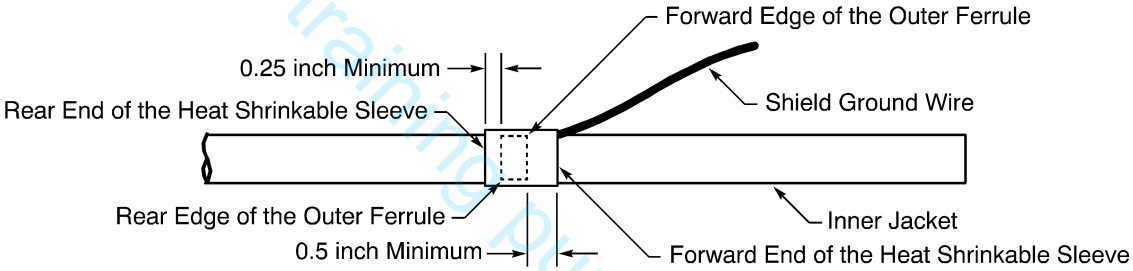

TERMINATION OF THE OUTER SHIELD
Figure 60

(a) Make a selection of an inner and outer ferrule from Table 27.

(b) Make a selection of a ferrule crimp tool. Refer to Subject 20-10-15.

(c) Make a selection of a heat shrinkable sleeve from Table 28.

Make sure that the heat shrinkable sleeve has the smallest diameter that can move freely on the shield ground wire assembly.

NOTE: For alternative heat shrinkable sleeves, refer to Subject 20-00-11.

(d) Make a selection of a shield ground wire. Refer to Subject 20-10-15.

NOTE: The shield ground wire must have the same size as the crimp barrel of the specified contact. Refer to Table 7 for the ground block contact.

(e) Put the outer ferrule on the cable.

(f) Put the inner ferrule on the cable.

Make sure that:

- The inner ferrule is between the shield and the inner jacket
- The rear end of the inner ferrule is tight against the end of the outer jacket.

(g) Remove the necessary length of insulation from one end of the shield ground wire. Refer to Subject 20-00-15.

For training purposes only.

BOEING PROPRIETARY - Copyright © Unpublished Work - See title page for details

Make sure that the bare conductor can extend a small amount farther than the length of the outer ferrule.

(h) Put the conductor of the shield ground wire between the shield and the outer ferrule.

Make sure that:

- The free end of the shield ground wire is pointed forward to the end of the wire
- The bare conductor extends a small amount farther than the rear end of the outer ferrule.

(i) Push the outer ferrule and the shield ground wire forward until the center of the outer ferrule is aligned with the center of the inner ferrule.

(j) Make sure that the forward end of the inner ferrule does not extend farther than 0.06 inch from the forward end of the outer ferrule.

(k) Crimp the outer ferrule.

(l) Remove the unwanted length of the shield that extends farther than the forward edge of the outer ferrule.

NOTE: The outer surface of the inner ferrule can be used to cut against.

(m) Remove the necessary length from the end of the shield ground wire to make the distance from the forward edge of the outer ferrule to the end of the wire equal to 2.0 inches maximum.

(n) Put the necessary length of heat shrinkable sleeve on the wire or cable.

Make sure that the distance:

- From the rear end of the ferrule to the rear end of the sleeve is 0.25 inch minimum
- From the forward end of the ferrule to the forward end of the sleeve is 0.5 inch minimum.

(o) Shrink the sleeve into its position. Refer to Subject 20-10-14.

(3) Prepare the cable for the termination of the inner shield. Refer to Figure 61 and Subject 20-00-15.

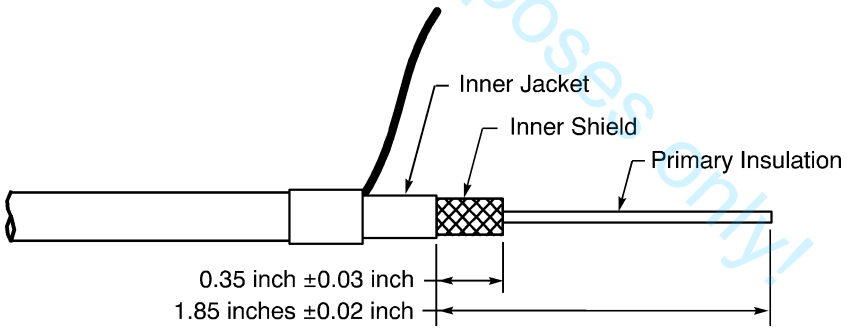

INNER JACKET AND INNER SHIELD REMOVAL
Figure 61

(a) Remove 1.85 inches ±0.02 inch of the inner jacket from the end of the cable.

(b) Remove the necessary length of the inner shield to make the distance from the end of the jacket to the end of the shield equal to 0.35 inch ±0.03 inch.

(4) Assemble the shield ground wire of the inner shield. Refer to Figure 62.

For training purposes only!

BOEING PROPRIETARY - Copyright © Unpublished Work - See title page for details

ASSEMBLY OF BACC65AN, BACC65AP, BACC65AV, AND BACC65AW CONNECTORS

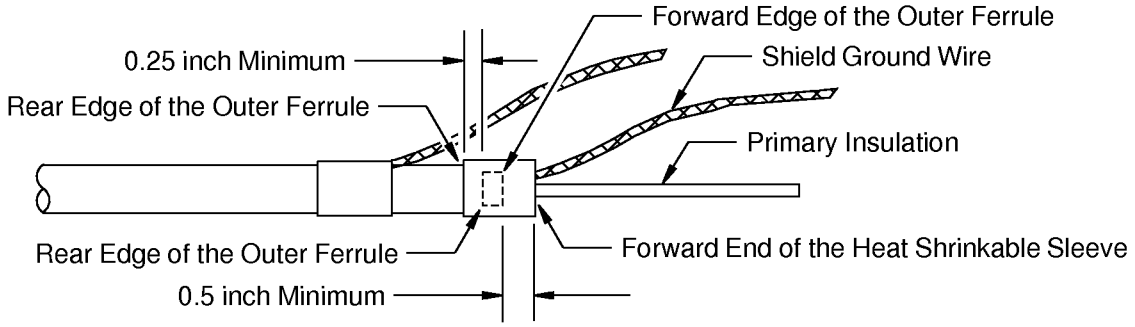

TERMINATION OF THE INNER SHIELD
Figure 62

For training purposes only!

(a) Make a selection of an inner and outer ferrule from Table 27.

(b) Make a selection of a ferrule crimp tool. Refer to Subject 20-10-15.

(c) Make a selection of a heat shrinkable sleeve from Table 28.

Make sure that the heat shrinkable sleeve has the smallest diameter that can move freely on the shield ground wire assembly.

NOTE: For alternative heat shrinkable sleeves, refer to Subject 20-00-11.

(d) Make a selection of a shield ground wire. Refer to Subject 20-10-15.

NOTE: The shield ground wire must have the same size as the crimp barrel of the specified contact. Refer to Subject 20-74-02 for the insert contact.

(e) Put the outer ferrule on the cable.

(f) Put the inner ferrule on the cable.

Make sure that:

- The inner ferrule is between the shield and the primary insulation
- The rear end of the inner ferrule is tight against the end of the inner jacket.

(g) Remove the necessary length of insulation from one end of the shield ground wire. Refer to Subject 20-00-15.

Make sure that the bare conductor can extend a small amount farther than the length of the outer ferrule.

(h) Put the conductor of the shield ground wire between the shield and the outer ferrule.

Make sure that:

- The free end of the shield ground wire is pointed forward to the end of the wire
- The bare conductor extends a small amount farther than the rear end of the outer ferrule.

(i) Push the outer ferrule and the shield ground wire forward until the center of the outer ferrule is aligned with the center of the inner ferrule.

(j) Make sure that the forward end of the inner ferrule does not extend farther than 0.06 inch from the forward end of the outer ferrule.

(k) Crimp the outer ferrule.

BOEING PROPRIETARY - Copyright © Unpublished Work - See title page for details

(l) Remove the unwanted length of the shield that extends farther than the forward edge of the outer ferrule.

NOTE: The outer surface of the inner ferrule can be used to cut against.

(m) Remove the necessary length from the end of the shield ground wire to make the distance from the forward edge of the outer ferrule to the end of the wire equal to 2.0 inches maximum.

(n) Put the necessary length of heat shrinkable sleeve on the wire or cable.

Make sure that the distance:

- From the rear end of the ferrule to the rear end of the sleeve is 0.25 inch minimum
- From the forward end of the ferrule to the forward end of the sleeve is 0.5 inch minimum.

(o) Shrink the sleeve into its position. Refer to Subject 20-10-14.

(5) Assemble the specified contact on the end of the shield ground wire.

For the assembly of:

- A ground block contact, refer to Paragraph 5.F.
- An insert contact, refer to Paragraph 5.E.

E. Contact Assembly

For the procedure to assemble:

- Insert contacts, refer to Subject 20-74-02.
- Ground block contacts, refer to Paragraph 5.F.
- Size 3 coax contacts, refer to Paragraph 5.L.

F. Ground Block Contact Assembly

Table 29
GROUND BLOCK CONTACT CRIMP TOOLS

Wire Size (AWG)	Crimp Barrel Size	Crimp Tool			
		Basic Unit		Locator	
		Part Number	Setting	Part Number	Color
20	20	M22520/1-01	4	M22520/1-02	Red
		M22520/2-01	7	M22520/2-11	-
		WA22	7	M22520/2-11	-
		WA22LC	7	M22520/2-11	-
		WA27F	4	M22520/1-02	Red
18	18	M22520/1-01	5	M22520/1-02	Red
		WA27F	5	M22520/1-02	Red

(1) Make a selection of a crimp tool from Table 29.

(2) Remove 0.18 inch ±0.02 inch of insulation from the end of the shield ground wire.

Refer to:

- Figure 63
- Subject 20-00-15 for the insulation removal procedures.

For training purposes only

BOEING PROPRIETARY - Copyright © Unpublished Work - See title page for details

ASSEMBLY OF BACC65AN, BACC65AP, BACC65AV, AND BACC65AW CONNECTORS

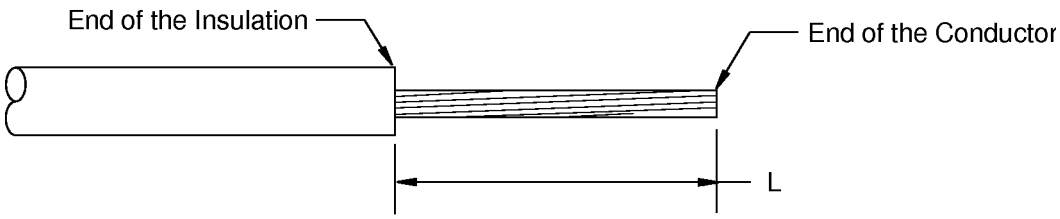

INSULATION REMOVAL LENGTH
Figure 63

(3) Put the end of the wire in the crimp barrel of the contact. Refer to Figure 64.

Make sure that:

- All of the strands of the conductor are in the crimp barrel
- The conductor can be seen in the inspection hole
- The distance from the end of the insulation to the end of the crimp barrel is not more than 0.03 inch.

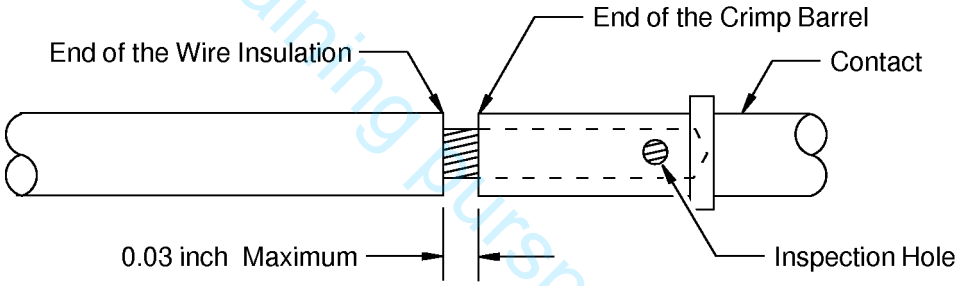

POSITION OF THE WIRE IN THE CRIMP BARREL OF THE CONTACT
Figure 64

(4) Crimp the contact.

Make sure that:

- All of the strands of the conductor are in the crimp barrel
- The conductor can be seen in the inspection hole
- The distance from the end of the insulation to the end of the crimp barrel is not more than 0.03 inch.

G. Assembly of Size 0505 Power Contacts

Refer to Subject 20-74-02.

H. Size 5 Coax Contact Assembly

Refer to Subject 20-74-02.

I. Assembly of Size 8 Coax Contacts

Refer to Subject 20-74-02.

J. Assembly of Size 8 Twinax Contacts

Refer to Subject 20-74-02.

For training purposes only!

BOEING PROPRIETARY - Copyright © Unpublished Work - See title page for details

K. Assembly of Size 8 Quadrax Contacts

Refer to Subject 20-74-02.

L. Size 3 Coax Contact Assembly

Table 30
COAX CABLE TRIM DIMENSIONS

Cable	Dimension	Length (inch)	
		Target	Tolerance
BMS13-65 Type 0F	A	0.67	±0.02
	B	0.30	±0.02
	C	0.22	±0.02
BMS13-65 Type 0G	A	0.67	±0.02
	B	0.30	±0.02
	C	0.22	±0.02
BMS13-65 Type 0H	A	0.67	±0.02
	B	0.30	±0.02
	C	0.22	±0.02
BMS13-65 Type 0J	A	0.69	±0.02
	B	0.30	±0.02
	C	0.22	±0.02
BMS13-65 Type 0K	A	0.76	±0.02
	B	0.38	±0.02
	C	0.22	±0.02

Table 31
COAX CONTACT CENTER CONTACT CRIMP TOOLS

Coax Contact	Crimp Tool		
	Basic Unit		Locator
	Part Number	Setting	
BACC47FP0F	M22520/1-01	7	282 581 007
BACC47FP0G	M22520/1-01	7	282 581 007
BACC47FP0H	M22520/1-01	8	282 581 007
BACC47FP0J	M22520/1-01	8	282 581 007
BACC47FP0K	M22520/1-01	8	282 581 009
BACC47FR0F	M22520/1-01	7	282 581 007
BACC47FR0G	M22520/1-01	7	282 581 007

For training purposes only!

BOEING PROPRIETARY - Copyright © Unpublished Work - See title page for details

Table 31 (continued)

Coax Contact	Crimp Tool		
	Basic Unit		Locator
	Part Number	Setting	
BACC47FR0H	M22520/1-01	8	282 581 007
BACC47FR0J	M22520/1-01	8	282 581 007
BACC47FR0K	M22520/1-01	8	282 581 009

Table 32
COAX CONTACT FERRULE CRIMP TOOLS

Coax Contact	Crimp Tool		
	Basic Unit	Die	
		Part Number	Cavity
BACT47FP0F	M22520/5-01	M22520/5-05	B
	HX23	M22520/5-05	B
BACC47FP0G	M22520/5-01	M22520/5-45	B
	HX23	M22520/5-45	B
BACC47FP0H	M22520/5-01	M22520/5-35	A
	HX23	M22520/5-35	A
BACC47FP0J	M22520/5-01	M22520/5-61	A
	HX23	M22520/5-61	A
BACC47FP0K	M22520/5-01	M22520/5-27	-
	HX23	M22520/5-27	-
BACC47FR0F	M22520/5-01	M22520/5-05	B
	HX23	M22520/5-05	B
BACC47FR0G	M22520/5-01	M22520/5-45	B
	HX23	M22520/5-45	B
BACC47FR0H	M22520/5-01	M22520/5-35	A
	HX23	M22520/5-35	A
BACC47FR0J	M22520/5-01	M22520/5-61	A
	HX23	M22520/5-61	A
BACC47FR0K	M22520/5-01	M22520/5-27	-
	HX23	M22520/5-27	-

(1) Make a selection of a center contact crimp tool from Table 31.

(2) Make a selection of a ferrule crimp tool from Table 32.

For training purposes only

BOEING PROPRIETARY - Copyright © Unpublished Work - See title page for details

(3) Cut the cable to make the end of the cable perpendicular to the longitudinal axis of the cable.

(4) Put these components on the cable:
- The sealing boot
- The crimp ferrule.

Refer to:
- Figure 65 for BMS 13-65 Type 0F and 0G cable
- Figure 66 for BMS 13-65 Type 0H, 0J, and 0K cable.

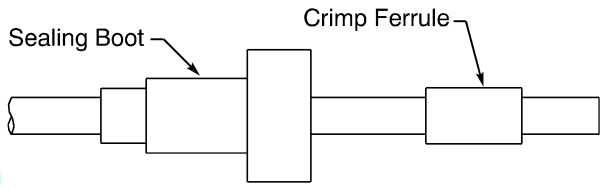

SEALING BOOT AND CRIMP FERRULE ON TYPE 0F AND TYPE 0G CABLE
Figure 65

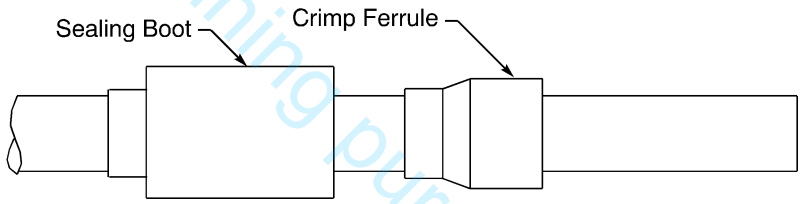

SEALING BOOT AND CRIMP FERRULE ON TYPE 0H, TYPE 0J, AND TYPE 0K CABLE
Figure 66

(5) Prepare the cable. Refer to Figure 67 and Table 30.

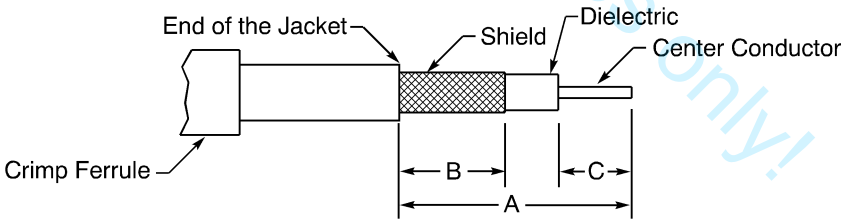

CABLE PREPARATION
Figure 67

(a) Remove the necessary length of jacket from the end of the cable to make the distance from the end of the jacket to the end of the cable equal to dimension A.

(b) Remove the necessary length of shield to make the distance from the end of the shield to the end of the cable jacket equal to dimension B.

(c) Remove the necessary length of the dielectric to make the distance from the end of the dielectric to the end of the center conductor equal to dimension C.

(6) Prepare the shield. Refer to Figure 68.

For training purposes only!

BOEING PROPRIETARY - Copyright © Unpublished Work - See title page for details

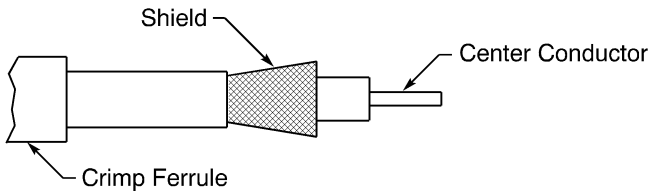

SHIELD PREPARATION
Figure 68

(a) Move the strands of the round conductor shield apart.

(b) Move the strands of the flat conductor shield apart.

(7) Put the center conductor into the crimp barrel of the center contact. Refer to Figure 69.

Make sure that:

- All of the strands are in the crimp barrel
- The strands of the center conductor can be seen in the inspection hole
- The distance between the dielectric and end of the crimp barrel is not more than 0.03 inch.

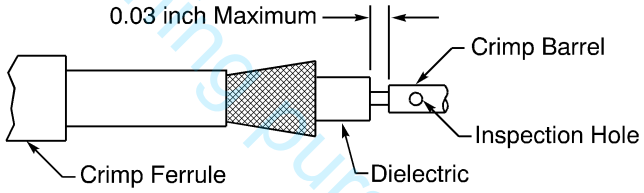

POSITION OF THE CENTER CONDUCTOR IN THE CRIMP BARREL
Figure 69

(8) Crimp the contact.

Make sure that:

- All of the strands are in the crimp barrel
- The strands of the center conductor can be seen in the inspection hole
- The distance between the dielectric and end of the crimp barrel is not more than 0.03 inch.

(9) Axially align the center contact assembly with the outer contact.

(10) Push the center contact into the outer contact until it makes a click.

Make sure that the strands of the shield stay on the outer surface of the crimp barrel.

Refer to:

- Figure 70 for BMS 13-65 Type 0F and 0G cable
- Figure 71 for BMS 13-65 Type 0H, 0J, and 0K cable.

For training purposes only!

BOEING PROPRIETARY - Copyright © Unpublished Work - See title page for details

ASSEMBLY OF BACC65AN, BACC65AP, BACC65AV, AND BACC65AW CONNECTORS

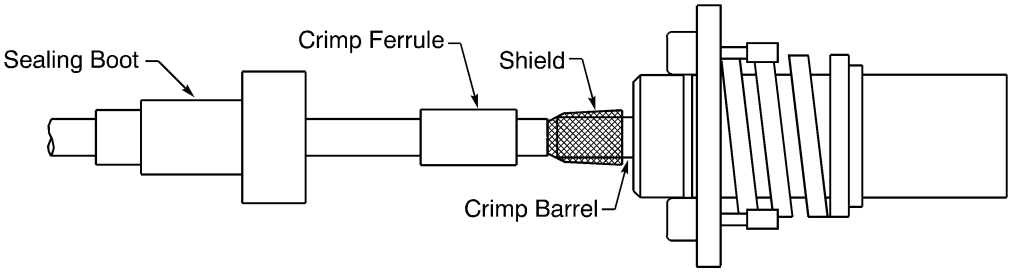

POSITION OF THE OUTER CONTACT FOR TYPE 0F AND TYPE 0G CABLE
Figure 70

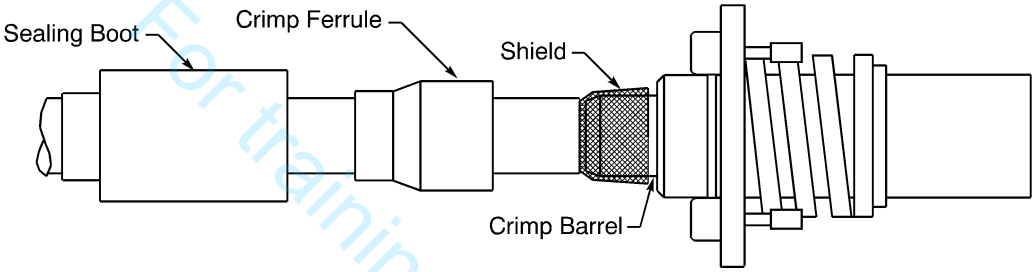

POSITION OF THE OUTER CONTACT FOR TYPE 0H, TYPE 0J, AND TYPE 0K CABLE
Figure 71

For training purposes only!

(11) Lightly pull the cable.

Make sure that the center contact is locked in the outer contact.

CAUTION: DO NOT PULL THE CABLE WITH A STRONG OR A SUDDEN FORCE. DAMAGE TO THE CONNECTOR OR THE CONTACT CAN OCCUR.

(12) If the center contact is not locked in the outer contact, do Step (10) and Step (11) again.

(13) Put the strands of the shield against the outer surface of the crimp barrel.

(14) Push the crimp ferrule forward until the forward end of the ferrule is against the shoulder of the crimp barrel. Refer to Figure 72.

Make sure that the distance between the forward end of the crimp ferrule and the shoulder of the crimp barrel is not more than 0.02 inch.

BOEING PROPRIETARY - Copyright © Unpublished Work - See title page for details

ASSEMBLY OF BACC65AN, BACC65AP, BACC65AV, AND BACC65AW CONNECTORS

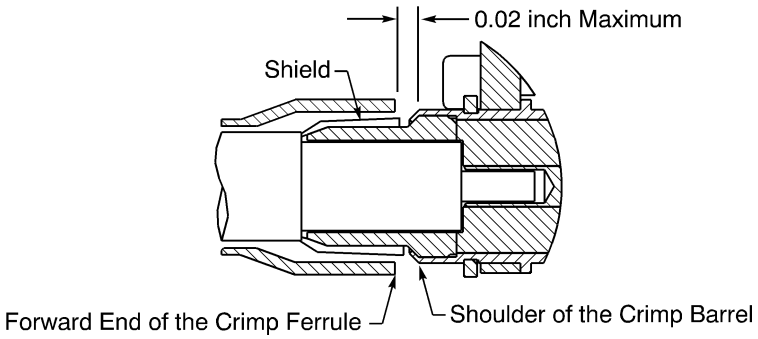

POSITION OF THE CRIMP FERRULE ON THE SHIELD AND THE CRIMP BARREL
Figure 72

(15) Crimp the ferrule.

Make sure that the distance between the forward end of the crimp ferrule and the shoulder of the crimp barrel is not more than 0.02 inch.

(16) Push the sealing boot forward until the forward edge of the boot is against:
- the shoulder of the coax socket contact
- the retaining ring on the coax pin contact.

M. Contact Insertion

This paragraph gives the procedure to install ground block contacts. For the procedure to install:
- Other contacts in the connector Insert, refer to Subject 20-74-02.
- Size 3 coax contacts in BACC65AV and BACC65AW connectors, refer to Paragraph 5.Q..

Table 33
GROUND BLOCK CONTACT INSERTION TOOLS

Ground Block Contact Cavity Size	Contact Size	Insertion Tool	
		Part Number	Color
16	1618	DAK83-20	-
		M81969/14-11	Red
		ST2220-2-28	-
	1620	DAK83-20	-
		M81969/14-11	Red
		ST2220-2-28	-

(1) If a strain relief clamp is specified, put the strain relief clamp on the wire harness.

Make sure that the wire harness tie tab of the strain relief points away from the end of the harness.

(2) If an EMI backshell is specified:

(a) Make a selection of a heat shrinkable sleeve from Table 39.

Make sure that the sleeve has the smallest diameter that can move on the wire harness easily.

For training purposes only!

BOEING PROPRIETARY - Copyright © Unpublished Work - See title page for details

(b) Put a 4.0 inch ±0.2 inch length of heat shrinkable sleeve on the wire harness.

NOTE: As an alternative, the heat shrinkable sleeve can be cut and attached to the wire harness after the EMI backshell is installed.

(3) Make a selection of a ground block contact insertion tool from Table 33.

NOTE: An insertion tool is not necessary.

(4) If an insertion tool is used:

(a) Put the contact assembly in the insertion tool.

(b) Axially align the insertion tool, the contact assembly and the contact cavity.

Make sure that the insertion tool and the contact assembly are perpendicular to the rear face of the ground block.

(c) Carefully push the insertion tool into the contact cavity until it stops.

Make sure that:

- The contact assembly and the contact cavity stay aligned
- Tension does not occur between the shield ground wire and the solder sleeve or the contact crimp barrel.

(d) Carefully pull the insertion tool out of the contact cavity.

Make sure that the insertion tool stays aligned with the contact cavity.

(e) Remove the insertion tool from the wire.

(5) If an insertion tool is not used:

(a) Axially align the contact assembly and the contact cavity.

Make sure that the contact assembly is perpendicular to the rear face of the ground block.

(b) Carefully push the the contact assembly into the contact cavity until it stops.

Make sure that:

- The contact assembly and the contact cavity stay aligned
- Tension does not occur between the shield ground wire and the solder sleeve or the contact crimp barrel.

(6) Lightly pull the wire to make sure that the contact is locked in the contact cavity.

CAUTION: DO NOT PULL THE WIRE WITH A STRONG OR A SUDDEN FORCE. THE FORCE CAN CAUSE DAMAGE TO THE CONNECTOR OR THE CONTACT.

CAUTION: DO NOT MAKE A DENT IN THE WIRE INSULATION WITH THE FINGERNAILS. DAMAGE TO THE WIRE INSULATION CAN CAUSE UNSATISFACTORY PERFORMANCE OF THE WIRE.

(7) If the contact is not locked in the contact cavity:

(a) Pull the contact assembly from the contact cavity.

(b) Do Step (4) or Step (5) again.

N. Insertion of a Fiber Optic Contact Terminus

Refer to the procedures for Contact Terminus Insertion in Subject 20-12-21.

O. Installation of Size 8 Quadrax Contacts

Refer to Subject 20-74-02.

For training purposes only

BOEING PROPRIETARY - Copyright © Unpublished Work - See title page for details

P. Size 5 Coax Contact Insertion

Refer to Subject 20-74-02.

Q. Size 3 Coax Contact Installation

Table 34
SIZE 3 COAX INSTALLATION TOOLS

Tool	Type	Size (inch)
Driver	Allen Wrench	5/64
	Screwdriver, Hex	5/64
Torque	Wrench with a Hex Driver	5/64

(1) Make a selection of a driver from Table 34.

(2) Put the coax contact assembly in the applicable contact cavity. Refer to Figure 73.

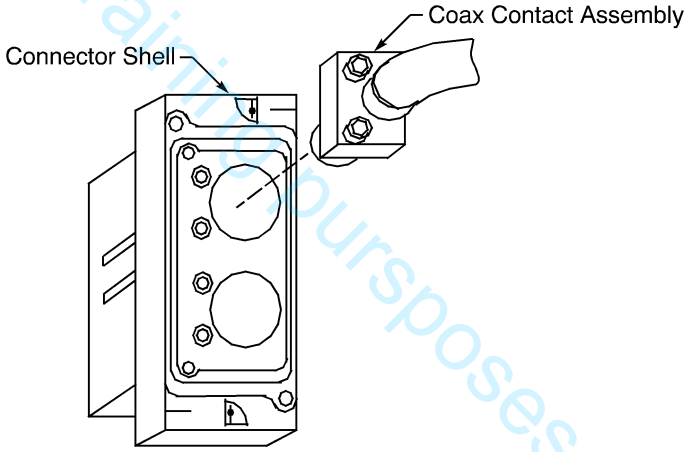

ALIGNMENT OF THE COAX CONTACT ASSEMBLY AND THE CONTACT CAVITY
Figure 73

(3) Engage the threads of the installation screws and the connector shell. Refer to Figure 74.

For training purposes only.

BOEING PROPRIETARY - Copyright © Unpublished Work - See title page for details

ASSEMBLY OF BACC65AN, BACC65AP, BACC65AV, AND BACC65AW CONNECTORS

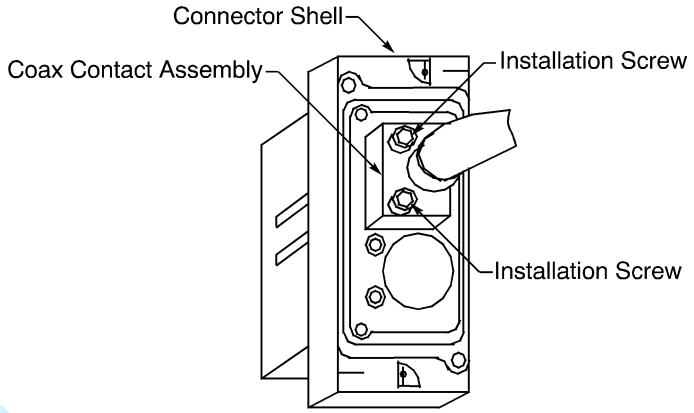

LOCATION OF THE COAX CONTACT INSTALLATION SCREWS
Figure 74

(4) Torque each screw 7 inch-pounds ±1 inch-pound.

R. Seal of an Empty Insert Contact Cavity

Refer to Subject 20-74-02.

S. EMI Ground Spring Installation

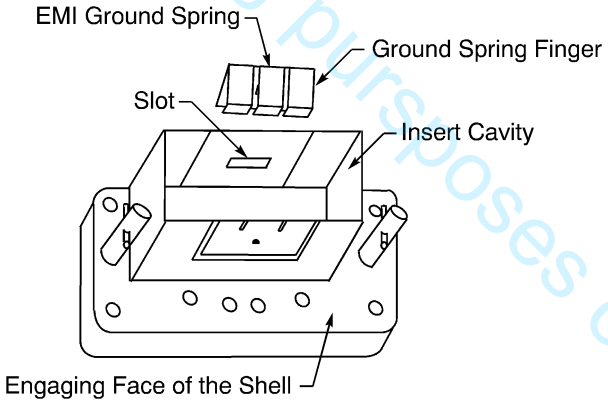

EMI GROUND SPRING INSTALLATION
Figure 75

A receptacle with a ground block must have EMI ground springs installed.

Refer to Figure 75.

(1) From the engaging end of the connector, align the EMI ground spring with the longer sides of the insert cavity.

Make sure that the spring fingers are on the inside of the insert cavity.

(2) Push the ground spring to the front face of the connector shell until the latch on the spring locks in the slot on the side of the insert cavity.

T. Insert Installation

NOTE: An insert can be installed with contacts or without contacts.

For training purposes only!

BOEING PROPRIETARY - Copyright © Unpublished Work - See title page for details

If a strain relief clamp is specified, it must be put on the wire harness with the wire harness tie tab pointed away from the end of the harness before:

- An insert with assembled contacts is installed in the connector shell
- Assembled ground block contacts are installed in the ground block.

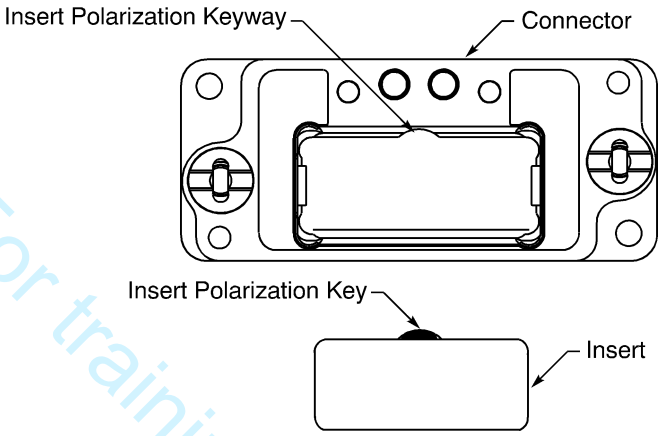

ALIGNMENT OF THE INSERT AND THE CONNECTOR SHELL
Figure 76

Refer to Figure 76.

(1) Align the polarization key on the insert with the polarization keyway on the rear side of the insert cavity.

NOTE: A blank insert does not have a polarization key.

(2) Push the insert into the insert cavity until it stops and is locked in position.

CAUTION: IF THE INSERT DOES NOT GO INTO THE CONNECTOR SHELL EASILY, DO NOT CONTINUE TO PUSH THE INSERT. DAMAGE TO THE INSERT CAN OCCUR.

(3) If the insert does not go into the connector shell correctly:

(a) Remove the insert. Refer to Paragraph 4.E.

(b) Do Step (1) and Step (2) again.

U. Installation of the Fiber Optic Alignment Sleeve Insert

Refer to Subject 20-74-02.

For training purposes only!

BOEING PROPRIETARY - Copyright © Unpublished Work - See title page for details

ASSEMBLY OF BACC65AN, BACC65AP, BACC65AV, AND BACC65AW CONNECTORS

V. Installation of the 1/4 -Turn Connector Shell Coupling Fastener

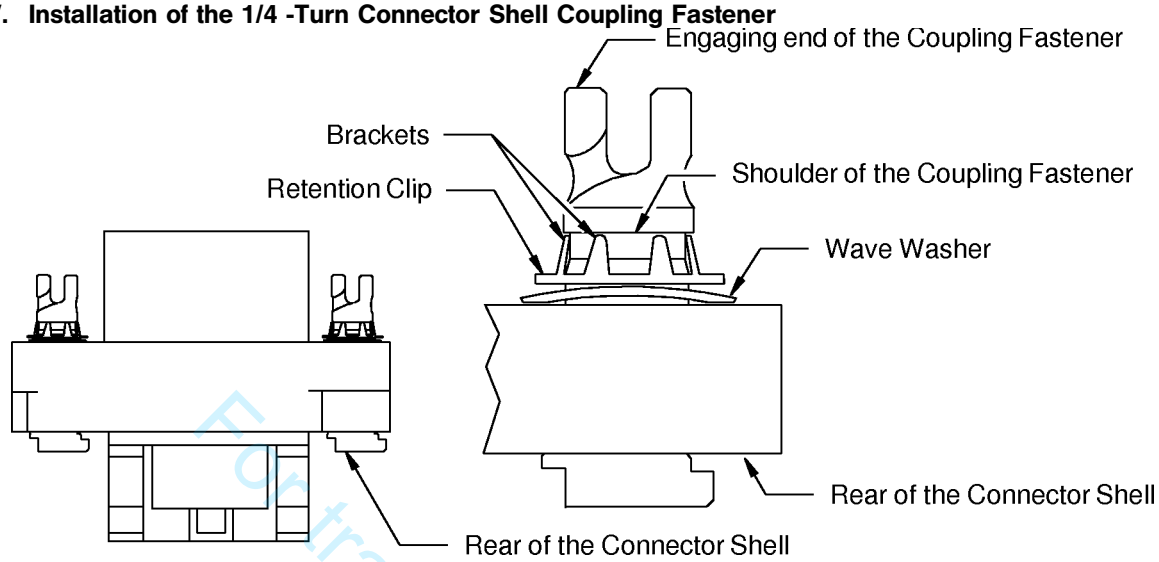

INSTALLATION OF THE COUPLING FASTENER
Figure 77

Refer to Figure 77:

(1) From the rear of the connector, put the coupling fastener in the hole in the connector shell. Make sure that the engaging end of the fastener is pointed forward.

(2) Put the wave washer on the engaging end of the coupling fastener.

(3) Put the retention clip on the engaging end of coupling fastener. Make sure that the brackets of the retention clip are pointed forward.

(4) Push the retention clip against the plug shell until the end of each bracket is against the body of the fastener below the shoulder of the fastener.

(5) Turn the coupling fastener to the unlocked position. Refer to Figure 78.

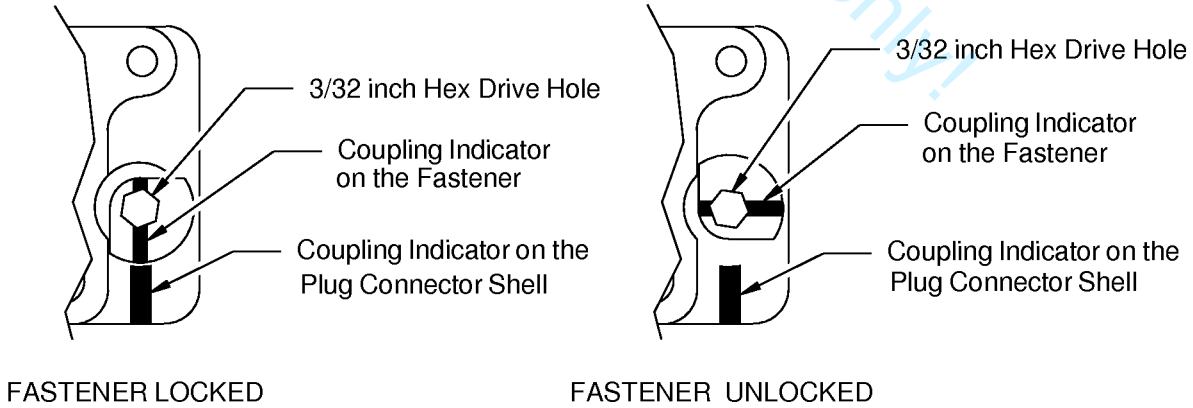

POSITIONS OF THE COUPLING FASTENER
Figure 78

For training purposes only!

BOEING PROPRIETARY - Copyright © Unpublished Work - See title page for details

W. Installation of the BACC10LL and BACC10LM Backshells

The strain relief clamp must be put on the wire harness before:

- An insert with assembled contacts is installed in the connector shell
- Assembled ground block contacts are installed in the ground block.

Table 35
NECESSARY MATERIALS

Material	Specification	Supplier
Silicone Tape	A-A-59163, Type I	Refer to Subject 20-00-11

Table 36
BACKSHELL INSTALLATION TOOLS

Tool	Type	Size (inch)
Driver	Allen Wrench	5/64
	Screwdriver, Hex	5/64
Torque	Wrench with a Hex Driver	5/64

For training purposes only!

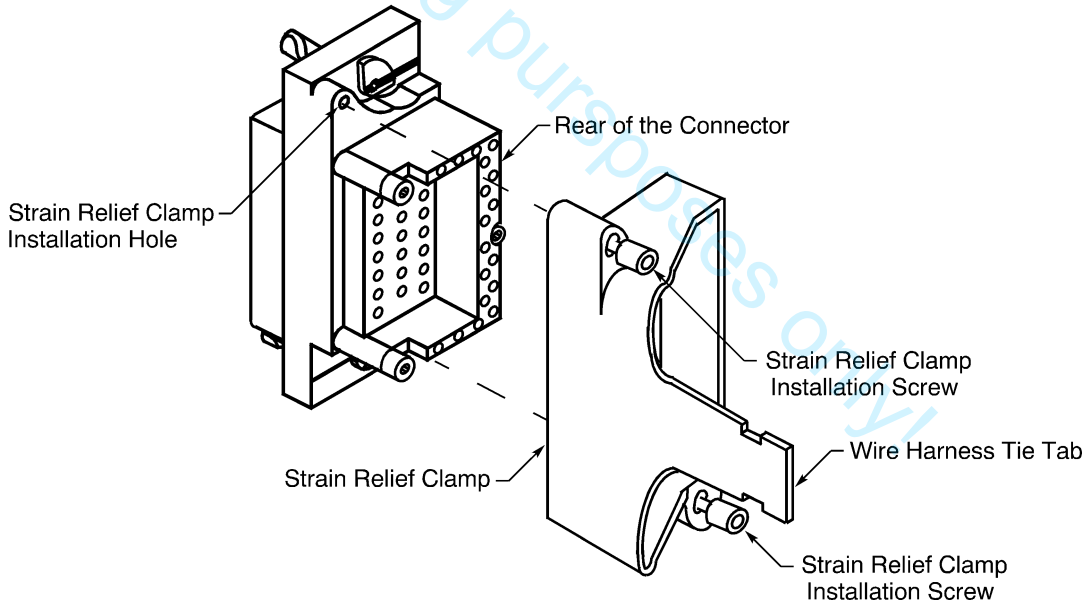

BACKSHELL INSTALLATION
Figure 79

Refer to Figure 79.

BOEING PROPRIETARY - Copyright © Unpublished Work - See title page for details

ASSEMBLY OF BACC65AN, BACC65AP, BACC65AV, AND BACC65AW CONNECTORS

(1) Make a selection of these tools from Table 36:
- A driver
- A torque tool.

(2) Make a selection of a tape from Table 35.

(3) Align the wire harness tie tab on the backshell with the bottom edge of the connector. Refer to Figure 80.

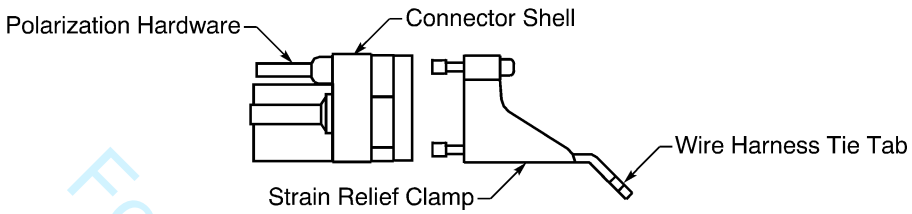

ALIGNMENT OF THE STRAIN RELIEF CLAMP AND THE CONNECTOR SHELL
Figure 80

(4) Engage the threads of the backshell installation screws with the screw holes in the connector shell.

(5) Torque each installation screw 7 inch-pounds ±1 inch-pound.

(6) Wind two layers of tape around the wire harness where the harness is against the wire harness tie tab.

(7) Assemble a wire harness tie or install a plastic tie strap on the wire harness and the wire harness tie tab. Refer to Subject 20-10-11.

Make sure that:
- The backshell is in the correct position
- The wire harness has a minimum of 2 layers of tape at the location of the strain relief tie tab
- The wire harness is held tightly on the tie tab with the wire harness tie
- The wires do not go across each other in the wire harness tie
- The wires do not have strain between the grommet and the strain relief tie tab
- A fiber optic cable does not have a bend radius that is smaller than 10 times the diameter of the cable
- A wire of a contact cavity at the outer edge makes bend of 60 degrees or more from the surface of the grommet for a minimum of 0.1 inch from the surface of the grommet. Refer to Figure 81.

For training purposes only

BOEING PROPRIETARY - Copyright © Unpublished Work - See title page for details

ASSEMBLY OF BACC65AN, BACC65AP, BACC65AV, AND BACC65AW CONNECTORS

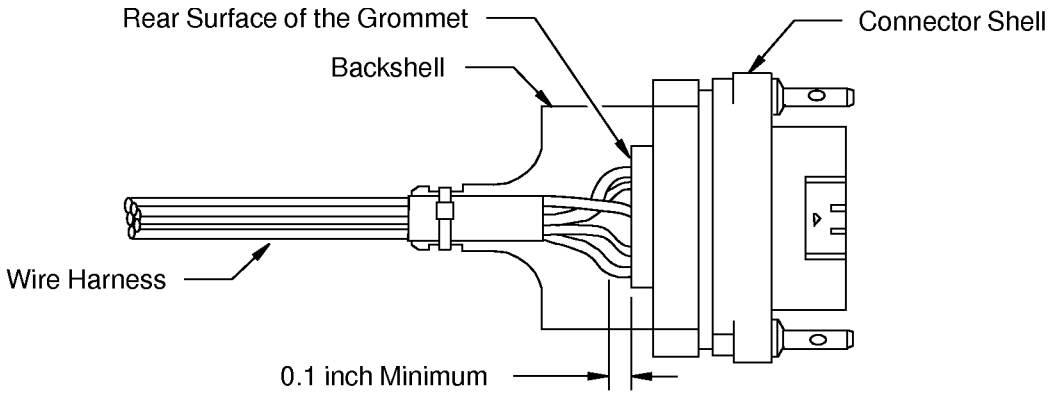

ASSEMBLED BACKSHELL
Figure 81

For training purposes only!

X. Installation of the BACC10LV Backshell

The strain relief clamp must be put on the wire harness before:

- An insert with assembled contacts is installed in the connector shell
- Assembled ground block contacts are installed in the ground block.

Table 37
NECESSARY MATERIALS

Material	Specification	Supplier
Silicone Tape	A-A-59163, Type I	Refer to Subject 20-00-11

Table 38
BACKSHELL INSTALLATION TOOLS

Tool	Type	Size (inch)
Driver	Allen Wrench	5/64
	Screwdriver, Hex	5/64
Torque	Wrench with a Hex Driver	5/64

(1) Make a selection of these tools from Table 38:
- A driver
- A torque tool.

(2) Make a selection of a tape from Table 37.

(3) Align the strain relief clamp with the connector. Refer to Figure 82.

BOEING PROPRIETARY - Copyright © Unpublished Work - See title page for details

ASSEMBLY OF BACC65AN, BACC65AP, BACC65AV, AND BACC65AW CONNECTORS

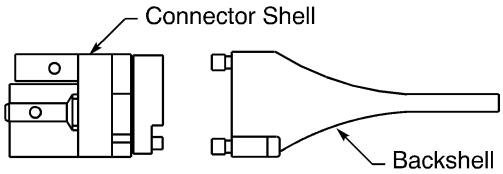

ALIGNMENT OF THE BACKSHELL AND THE CONNECTOR SHELL
Figure 82

(4) Engage the threads of the backshell installation screws with the screw holes in the connector shell.

(5) Torque each installation screw 7 inch-pounds ±1 inch-pound.

(6) Wind a minimum of two layers of tape on the wire harness where the saddle bars of the cable clamp hold the harness.

Make sure that:

- The center of the tape is aligned with the saddle bar screw holes.
- The layers of tape make a 100 percent overlap.
- The number of layers of tape is correct for the correct fit of the wire harness between the saddle bars.

(7) Install and tighten the saddle bar screws. Refer to Figure 83.

Make sure that:

- The wire harness is tight between the saddle bars
- The saddle bar screws are tight
- The saddle bars do not crush or pinch the wire harness.

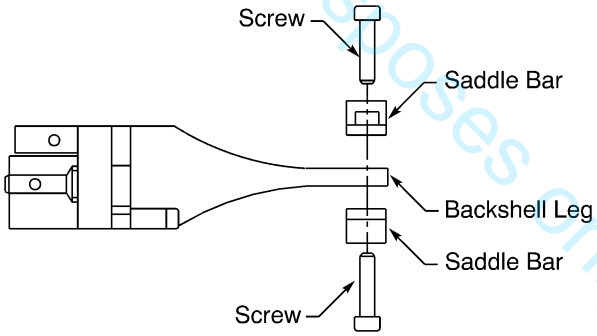

STRAIN RELIEF CLAMP ASSEMBLY
Figure 83

(8) If the wire harness is too tight in the clamp:

(a) Remove the saddle bar screws.

(b) Remove some of the tape on the wire harness.

Make sure that the number of layers of tape is correct for the correct fit of the wire harness between the saddle bars.

(c) Do Step (7) again.

(d) If it is necessary, do Step (8) or Step (9) again.

(9) If the wire harness is too loose in the clamp:

For training purposes only!

BOEING PROPRIETARY - Copyright © Unpublished Work - See title page for details

(a) Remove the saddle bar screws.

(b) Put more layers of tape on the wire harness where the saddle bars hold the wire harness.

Make sure that the number of layers of tape is correct for the correct fit of the wire harness between the saddle bars.

(c) Do Step (7) again.

(d) If it is necessary, do Step (8) or Step (9) again.

Y. Installation of the BACC10LH Backshell

The EMI backshell strain must be installed after:

- An insert with assembled contacts is installed in the connector shell
- Assembled ground block contacts are installed in the ground block.

For training purposes only!

Table 39
NECESSARY MATERIALS

Material	Description	Supplier
Sleeve, Heat Shrinkable	Grade B, Class 1	Refer to Subject 20-00-11
Silicone Tape	A-A-59163, Type I	Refer to Subject 20-00-11

Table 40
SHIELD TERMINATOR BAND PART NUMBERS

Boeing Standard	Installation Configuration	Supplier
BACB42F4	Double Wrap	Refer to Subject 20-00-11

Table 41
EMI BACKSHELL INSTALLATION TOOLS

Tool	Type	Size (inch)
Driver	Allen Wrench	5/64
	Screwdriver, Hex	5/64
Torque	Wrench with a Hex Driver	5/64

(1) Make a selection of these tools from Table 41:
- A driver
- A torque tool.

(2) Make a selection of a shield terminator band from Table 40.

NOTE: 2 bands are necessary for the installation of the EMI backshell.

(3) Make a selection of a tape from Table 39.

Make sure that the tape has a width of 0.25 inch.

(4) Make a selection of a heat shrinkable sleeve from Table 39.

Make sure that the sleeve has a diameter of 0.19 inch.

BOEING PROPRIETARY - Copyright © Unpublished Work - See title page for details

ASSEMBLY OF BACC65AN, BACC65AP, BACC65AV, AND BACC65AW CONNECTORS

(5) Cut a 3.0 inch ±0.1 inch length of the 0.19 inch diameter heat shrinkable sleeve for each shield ground wire.

(6) Put one half of the EMI backshell on the wire harness at the rear of the connector shell. Refer to Figure 84.

NOTE: Each half of an EMI backshell has the same configuration.

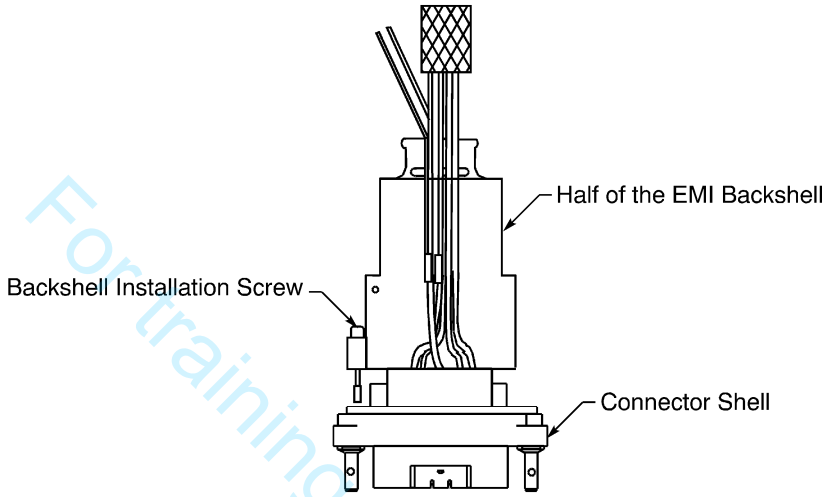

POSITION OF ONE HALF OF THE EMI BACKSHELL CONNECTOR ASSEMBLY
Figure 84

(7) Engage the threads of the backshell installation screw with the threads of the backshell mounting hole on the rear side of the connector shell. Refer to Figure 84.

(8) Put approximately half of the uninsulated shield ground wires through the slot in the EMI backshell. Refer to Figure 85.

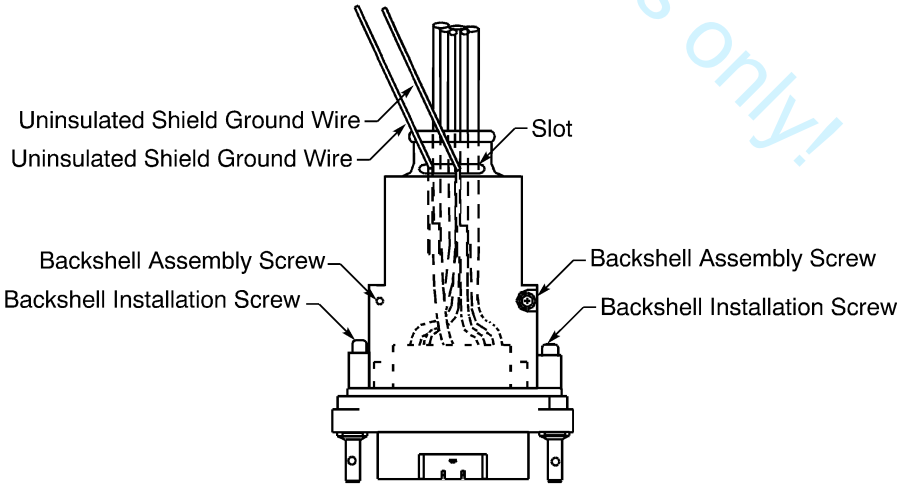

POSITION OF THE SHIELD GROUND WIRES IN THE BACKSHELL SLOT
Figure 85

For training purposes only!

BOEING PROPRIETARY - Copyright © Unpublished Work - See title page for details

(9) Put the remaining uninsulated shield ground wires through the slot in the other half of the EMI backshell.

(10) Do Step (6) through Step (8) again for the other half of the EMI backshell.

(11) Put each half of the EMI backshell together.

(12) Engage the threads of each assembly screw with the threads in the body of the other half of the EMI backshell. Refer to Figure 85.

(13) Torque each assembly screw and installation screw 7 inch-pounds ±1 inch-pound.

(14) Carefully pull the end of each uninsulated shield ground wire through the slot in the EMI backshell to decrease unwanted shield ground wire length inside the EMI backshell.

(15) Put each uninsulated shield ground wire tightly and symmetrically across the band termination platform of the EMI backshell. Refer to Figure 86.

Make sure that:

- The distances between the shield ground wires in the slot are equal.
- Each shield ground wire does not make an overlap with a different shield ground wire on the band termination platform.

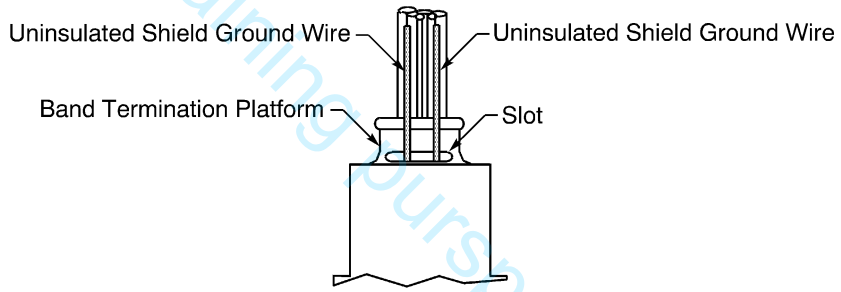

POSITION OF THE SHIELD GROUND WIRES ON THE BAND TERMINATION PLATFORM
Figure 86

(16) Install a shield terminator band on the shield ground wires and the band termination platform. Refer to Figure 87 and Paragraph 5.AB.

Make sure that the band buckle does not make an overlap with the shield ground wires or the slot.

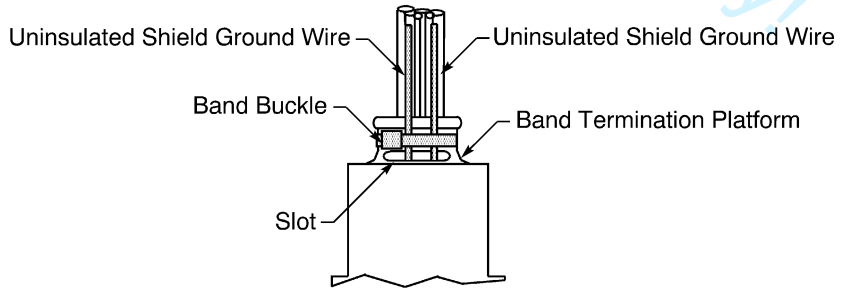

POSITION OF THE SHIELD TERMINATOR BAND ON THE BAND TERMINATION PLATFORM
Figure 87

(17) Remove the necessary length of each shield ground wire to make the distance from the shield terminator band to the end of the shield ground wire equal to approximately 2.5 inches.

BOEING PROPRIETARY - Copyright © Unpublished Work - See title page for details
For training purposes only!

(18) Put a 3.0 inch length of heat shrinkable sleeve on each shield ground wire. Refer to Figure 88.

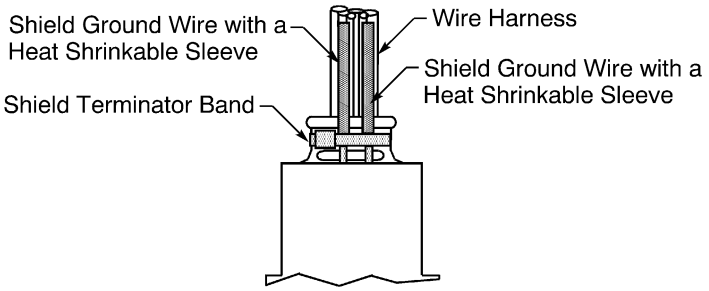

POSITION OF THE HEAT SHRINKABLE SLEEVES
Figure 88

(19) Shrink each sleeve into position. Refer to Subject 20-10-14.

(20) Align each of the shield ground wires with the longitudinal axis of the wire harness.

Make sure that the shield ground wires do not make an overlap with each other.

(21) Push the overall shield of the wire harness forward. Refer to Figure 89.

Make sure that:

- The shield ground wires are between the wire harness and the overall shield.
- The forward end of the overall shield is 0.10 inch ±0.03 inch from the rear surface of the EMI backshell.

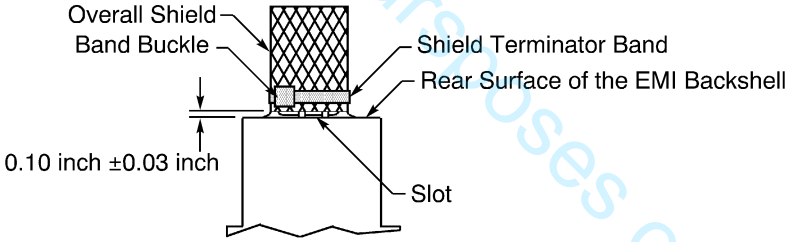

POSITION OF THE OVERALL SHIELD AND THE SHIELD TERMINATOR BAND
Figure 89

(22) Install a shield terminator band on the overall shield and the band termination platform. Refer to Figure 89 and Paragraph 5.AB.

Make sure that:

- The band does not make an overlap with the slot on the band termination platform
- The band buckle does not make an overlap with the slot on the band termination platform.

(23) Cut a length of the tape that is approximately 2.5 times the distance around the outer surface of the band termination platform.

(24) Put one end of the tape on the end of the band that is cut.

(25) Wind the tape around the band termination platform. Refer to Figure 90.

Make sure that the layers of tape make a 100 percent overlap.

For training purposes only!

BOEING PROPRIETARY - Copyright © Unpublished Work - See title page for details

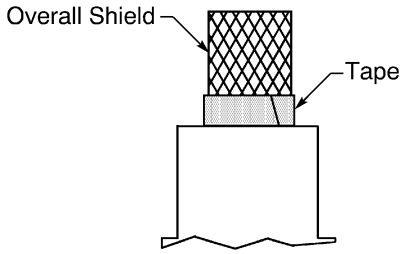

POSITION OF THE TAPE ON THE SHIELD TERMINATOR BAND
Figure 90

(26) If a 4.0 inch length of heat shrinkable sleeve is on the wire harness:

(a) Push the heat shrinkable sleeve forward until the forward edge of the sleeve is against the rear surface of the EMI backshell.

(b) Shrink the sleeve into position. Refer to Subject 20-10-14.

(27) If a 4.0 inch length of heat shrinkable sleeve is not on the wire harness; install a sleeve. Refer to Figure 91.

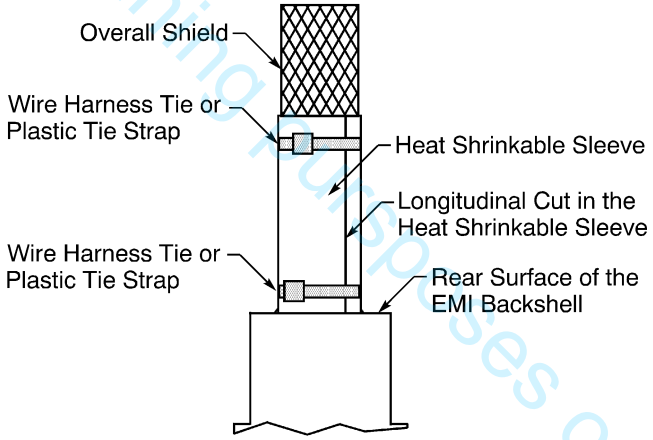

POSITION OF THE HEAT SHRINKABLE SLEEVE
Figure 91

For training purposes only!

(a) Make a selection of a heat shrinkable sleeve from Table 39,

Make sure that the sleeve has the smallest diameter that can move on the wire harness easily.

(b) Make a longitudinal cut in a 4.0 inch length of the sleeve from one end to the other end.

(c) Put the sleeve around the wire harness.

(d) Push the sleeve forward until the forward edge of the sleeve is against the rear surface of the EMI backshell.

Make sure that the longitudinal axis of the sleeve is aligned with the longitudinal axis of the wire harness.

(e) Assemble a wire harness tie, or install a plastic tie strap on each end of the sleeve. Refer to Subject 20-10-11.

BOEING PROPRIETARY - Copyright © Unpublished Work - See title page for details

ASSEMBLY OF BACC65AN, BACC65AP, BACC65AV, AND BACC65AW CONNECTORS

Z. Assembly of the Radiall 617924013 Backshell

Table 42
NECESSARY TOOLS

Material	Size (inch)	Supplier
Screw, Bit Hex	5/64	An available source
Screwdriver, Hex	5/64	An available source
Torque Tool, Hex	-	An available source

(1) Make a selection of these tools from Table 42:
- A 5/64 hex screw bit
- A 5/64 hex screwdriver
- A hex torque tool.

(2) Put the strain relief grommet in the bottom half of the backshell. Refer to Figure 92.

Make sure that the slit in the grommet is on top.

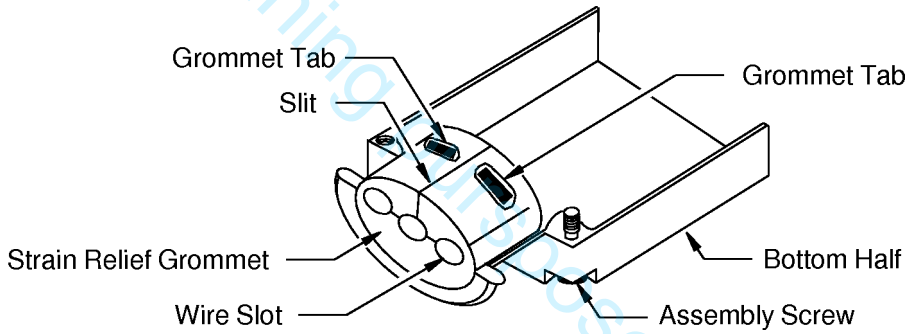

POSITION OF THE STRAIN RELIEF GROMMET IN THE BACKSHELL HALF
Figure 92

(3) Put the forward end of the backshell against the rear of the connector shell.

(4) Carefully push each wire through the slit of the grommet and into the applicable wire slot in the grommet.

Make sure that lateral force is not applied to the contact assembly in the insert.

CAUTION: IF TOO MUCH LATERAL FORCE IS APPLIED TO A CONTACT ASSEMBLY IN THE INSERT, DAMAGE TO THE INSERT CAN OCCUR.

(5) Put the top half of the backshell on the bottom half. Refer to Figure 93.

For training purposes only!

BOEING PROPRIETARY - Copyright © Unpublished Work - See title page for details

ASSEMBLY OF BACC65AN, BACC65AP, BACC65AV, AND BACC65AW CONNECTORS

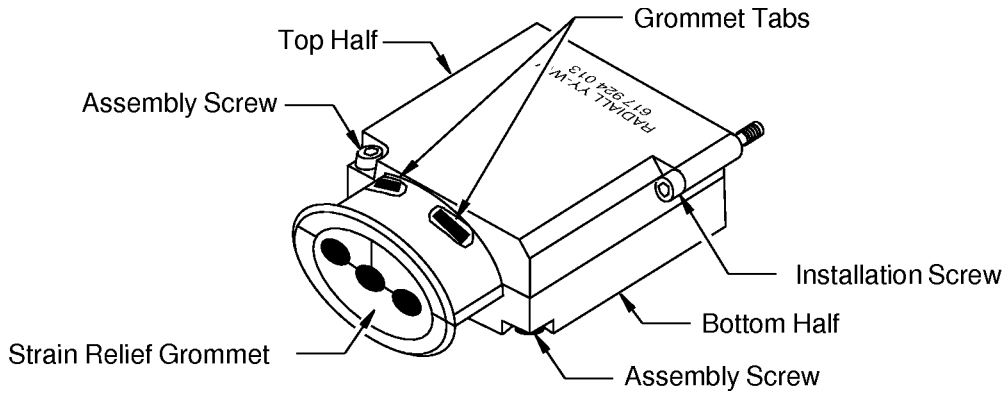

POSITION OF THE BACKSHELL HALVES
Figure 93

(6) Engage the threads of each backshell assembly screw.

(7) Torque the assembly screws 6 inch-pounds to 8 inch-pounds.

(8) Engage the threads of each backshell installation screw and the applicable backshell installation hole in the connector shell. Refer to Figure 94.

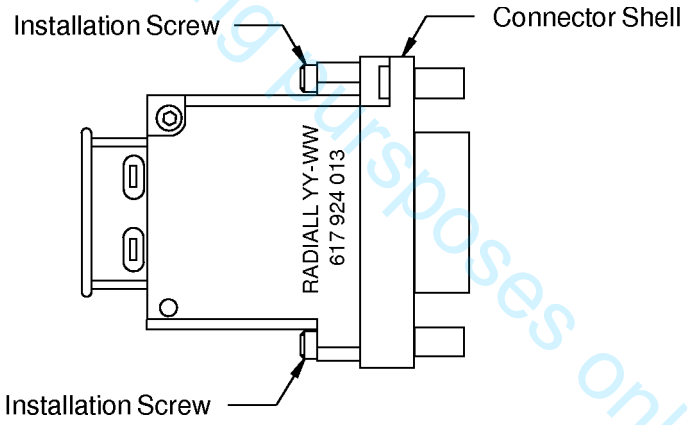

POSITION OF THE BACKSHELL ON THE CONNECTOR SHELL
Figure 94

(9) Tighten each installation screw a small amount with a screwdriver.

(10) Torque each installation screw 6 inch-pounds to 8 inch-pounds.

AA. Installation of the Radiall 617927007 Backshell

Table 43
NECESSARY MATERIALS

Tool	Size (inch)	Supplier
Screw Bit, Hex	5/64	An available source
	7/64	An available source

BOEING PROPRIETARY - Copyright © Unpublished Work - See title page for details
For training purposes only!

Table 43 (continued)

Tool	Size (inch)	Supplier
Screwdriver, Hex	5/64	An available source
	7/64	An available source
Torque Tool, Hex	-	An available source

(1) Make a selection of these tools from Table 43:
- A 5/64 hex screw bit
- A 5/64 hex screwdriver
- A 7/64 hex screw bit
- A 7/64 hex screwdriver
- A hex torque tool.

(2) If the contact assemblies are installed in the connector insert, remove them. Refer to Subject 20-74-02.

CAUTION: IF THE CONTACT ASSEMBLIES ARE NOT REMOVED FROM THE CONNECTOR INSERT, DAMAGE TO THE INSERT CAN OCCUR.

(3) Bend each wire upward approximately 1 inch from the rear end of the contact crimp barrel. Refer to Figure 95.

Make sure that the configuration of the bend is the same for all the wires.

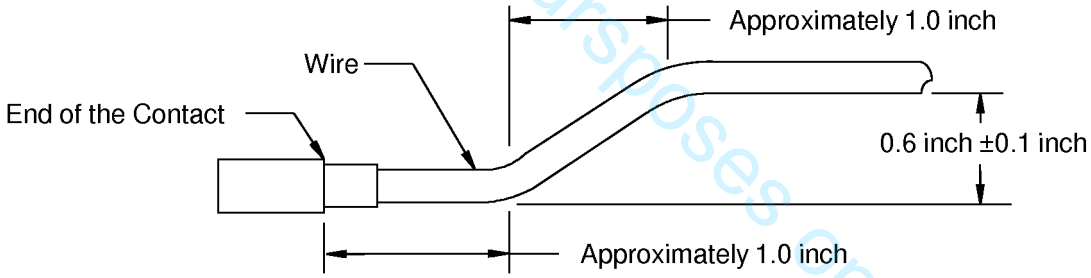

BEND CONFIGURATION OF THE WIRES
Figure 95

(4) Install the contacts in the connector insert. Refer to Subject 20-74-02.

(5) Put the offset half of the backshell in the specified clock position.

Refer to:
- Figure 96 for the 12 o'clock position
- Figure 97 for the 6 o'clock position.

NOTE: IF THE CLOCK POSITION IS NOT SPECIFIED, PUT THE BACKSHELL IN THE 12 O'CLOCK POSITION.

For training purposes only!

BOEING PROPRIETARY - Copyright © Unpublished Work - See title page for details

ASSEMBLY OF BACC65AN, BACC65AP, BACC65AV, AND BACC65AW CONNECTORS

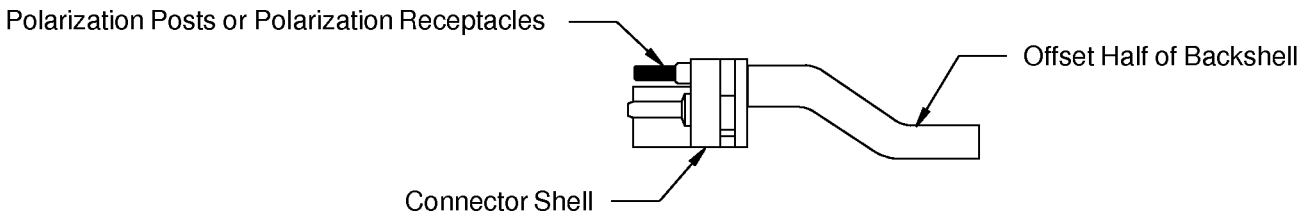

12 O'CLOCK POSITION
Figure 96

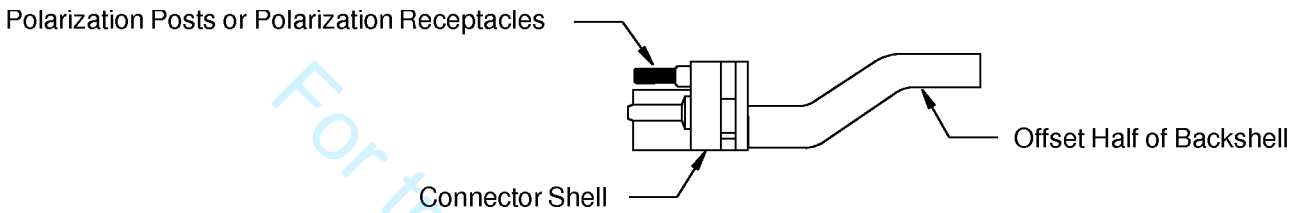

6 O'CLOCK POSITION
Figure 97

For training purposes only!

(6) Open the two strain relief grommets in the bottom half of the backshell.

(7) Put each wire in the applicable slot in each grommet. Refer to Figure 98.

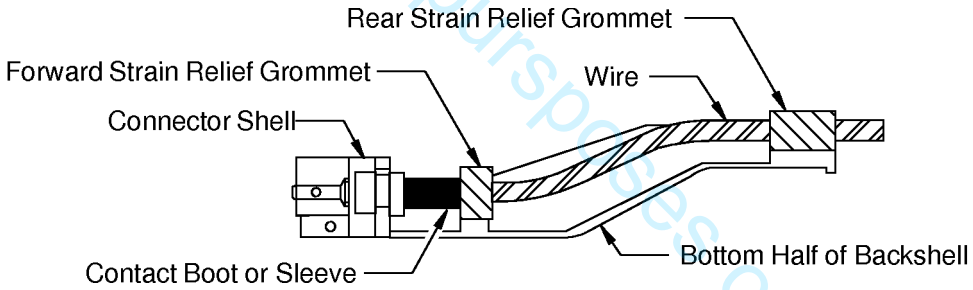

POSITION OF THE WIRE IN THE BOTTOM HALF OF THE BACKSHELL
Figure 98

(8) Push the backshell half forward until it is against the rear of the connector.

Make sure that the contact boots are inside the forward grommet.

(9) Engage the threads of the backshell installation screw and the backshell installation hole on the rear of the connector shell.

(10) Tighten each screw with the hand.

(11) Close the forward strain relief grommet.

(12) Put the saddle bar on the forward strain relief grommet.

Make sure that the tab on the top of the grommet is aligned in the hole in the top of the saddle bar.

(13) Engage the threads of the saddle bar installation screws and the saddle bar installation holes. Refer to Figure 99.

BOEING PROPRIETARY - Copyright © Unpublished Work - See title page for details

ASSEMBLY OF BACC65AN, BACC65AP, BACC65AV, AND BACC65AW CONNECTORS

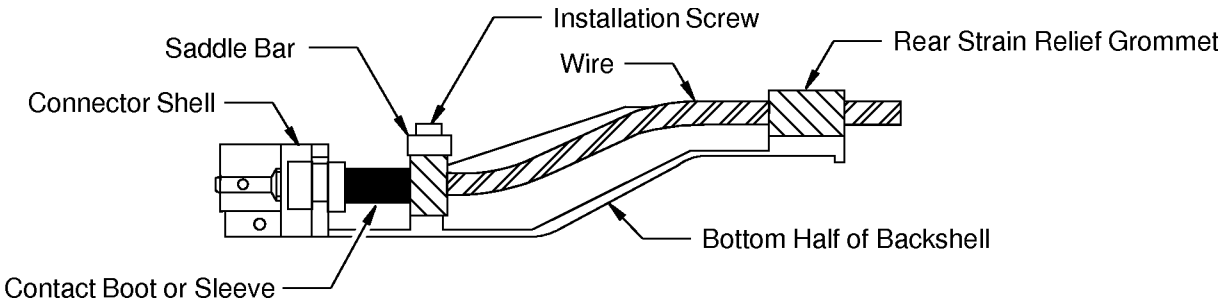

POSITION OF THE SADDLE BAR ON THE FORWARD STRAIN RELIEF GROMMET
Figure 99

(14) Tighten each installation screw with the hand.

(15) Torque each screw 6 inch-pounds to 8 inch-pounds.

(16) Close the rear strain relief grommet.

(17) Align the top half of the backshell with the wires in the bottom half of the backshell. Refer to Figure 100.

Make sure that the tab on the top of the grommet is aligned with the slot on the inner surface of the backshell half.

For training purposes only!

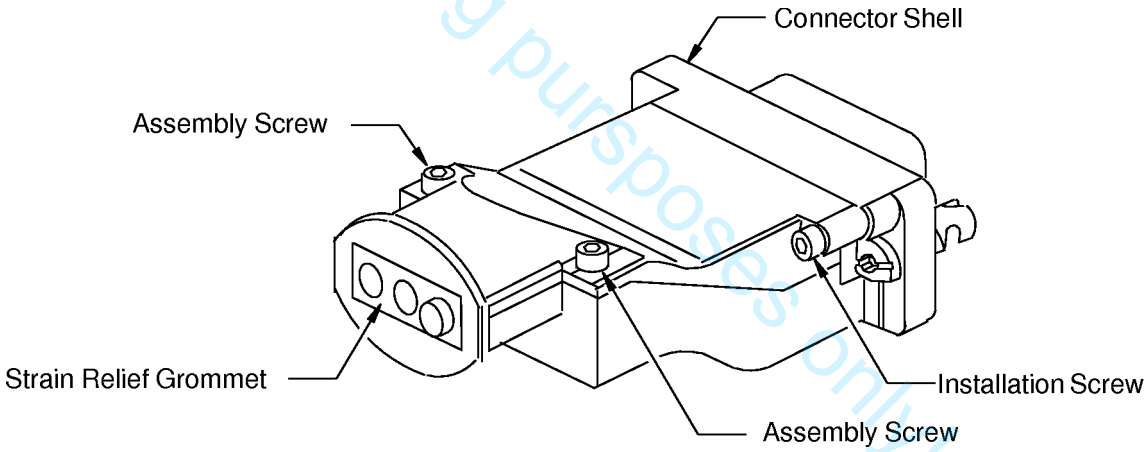

POSITION OF THE TOP HALF OF THE BACKSHELL
Figure 100

(18) Engage the backshell installation screw of the top half of the backshell and the backshell installation hole in the connector shell.

(19) Tighten the screw a small amount with a screwdriver.

(20) Do Step (18) and Step (19) again for the backshell installation screw on the bottom half of the backshell.

(21) Torque the backshell installations screws 6 inch-pounds to 8 inch-pounds.

(22) Engage the threads of each backshell assembly screw and the assembly screw holes in the bottom half of the backshell.

(23) Torque the backshell assembly screws 12 inch-pounds to 14 inch-pounds.

BOEING PROPRIETARY - Copyright © Unpublished Work - See title page for details

AB. Shield Terminator Band Installation

Refer to the procedures for the installation of the shield terminator band in Subject 20-25-14.

6. CONNECTOR POLARIZATION

A. Connector Polarization - Shell Types A, B, and C

The polarization code of the connector part number identifies the position of:

- The polarization posts on the plug connector
- The polarization receptacles on the receptacle connector.

Refer to Figure 1.

(1) Find the polarization code in the connector part number from the equipment list.

(2) For that code, find the correct position of:

- The polarization posts on the plug
- The polarization receptacles on the receptacle.

Refer to Paragraph 6.C.

(3) If the position of the posts or the receptacles do not agree with the code in the part number from the equipment list, put the posts or the receptacles into the correct position. Refer to Paragraph 6.E.

(4) If the polarization code in the part number on the connector shell does not agree with the polarization code in the part number from the equipment list, change the part number on the connector shell. Refer to Paragraph 6.G.

B. Connector Polarization - Shell Types D, E and F

The polarization code of the connector part number identifies the position of:

- The polarization posts on the plug connector
- The polarization receptacles on the receptacle connector.

Refer to Figure 1.

(1) Find the polarization code in the connector part number from the equipment list.

(2) For that code, find the correct position of:

- The polarization posts on the plug
- The polarization receptacles on the receptacle.

Refer to Paragraph 6.D.

(3) If the position of the posts or the receptacles do not agree with the code in the part number from the equipment list, put the posts or the receptacles into the correct position. Refer to Paragraph 6.F.

For training purposes only!

BOEING PROPRIETARY - Copyright © Unpublished Work - See title page for details

ASSEMBLY OF BACC65AN, BACC65AP, BACC65AV, AND BACC65AW CONNECTORS

C. Polarization Post and Polarization Receptacle Positions - Shell Types A, B, and C

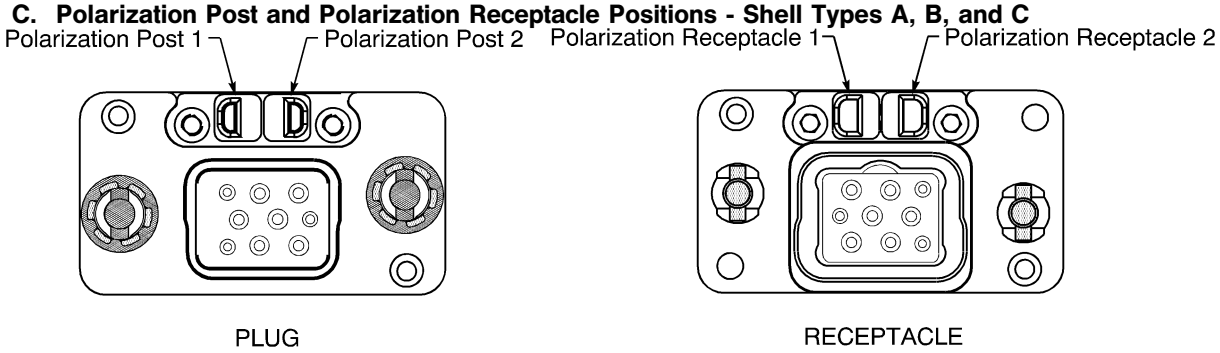

POLARIZATION POSTS AND POLARIZATION RECEPTACLES - SHELL TYPES A, B, AND C
Figure 101

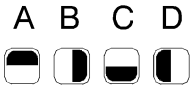

Dark area shows the polarization post on the plug
and the polarization receptacle on the receptacle

POLARIZATION POSITIONS - SHELL TYPES A, B, AND C
Figure 102

Table 44
POLARIZATION POST AND POLARIZATION RECEPTACLE POSITIONS - SHELL TYPES A, B, AND C

Polarization Code	Plug Shell		Receptacle Shell	
	Polarization Post 1	Polarization Post 2	Polarization Receptacle 1	Polarization Receptacle 2
01	A	A	A	A
02	A	B	D	A
03	A	C	C	A
04	A	D	B	A
05	B	A	A	D
06	B	B	D	D
07	B	C	C	D
08	B	D	B	D
09	C	A	A	C
10	C	B	D	C
11	C	C	C	C
12	C	D	B	C
13	D	A	A	B
14	D	B	D	B

For training purposes only!

BOEING PROPRIETARY - Copyright © Unpublished Work - See title page for details

Table 44 (continued)

Polarization Code	Plug Shell		Receptacle Shell	
	Polarization Post 1	Polarization Post 2	Polarization Receptacle 1	Polarization Receptacle 2
15	D	C	C	B
16	D	D	B	B

D. Polarization Post and Polarization Receptacle Positions - Shell Types D, E and F

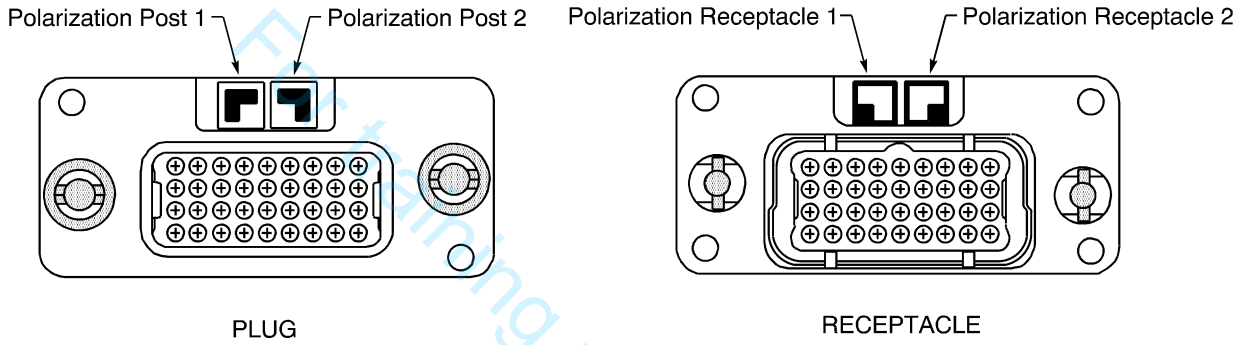

POLARIZATION POSTS AND POLARIZATION RECEPTACLES - SHELL TYPES D, E, and F
Figure 103

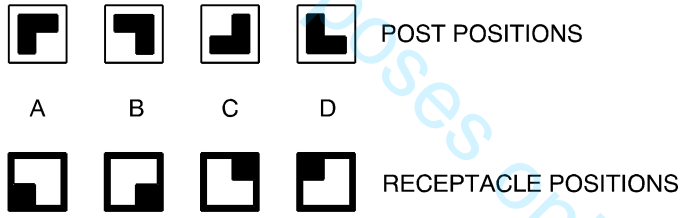

Dark area shows the solid part of the polarization post on the plug and the solid part of the polarization receptacle on the receptacle

POLARIZATION POSITIONS - SHELL TYPES D, E and F
Figure 104

Table 45
POLARIZATION POST AND POLARIZATION RECEPTACLE POSITIONS - SHELL TYPES D, E and F

Polarization Code	Plug Shell		Receptacle Shell	
	Polarization Post 1	Polarization Post 2	Polarization Receptacle 2	Polarization Receptacle 1
AA	A	A	A	A
AB	A	B	A	B
AC	A	C	A	C

For training purposes only!

BOEING PROPRIETARY - Copyright © Unpublished Work - See title page for details

Table 45 (continued)

Polarization Code	Plug Shell		Receptacle Shell	
	Polarization Post 1	Polarization Post 2	Polarization Receptacle 2	Polarization Receptacle 1
AD	A	D	A	D
BA	B	A	B	A
BB	B	B	B	B
BC	B	C	B	C
BD	B	D	B	D
CA	C	A	C	A
CB	C	B	C	B
CC	C	C	C	C
CD	C	D	C	D
DA	D	A	D	A
DB	D	B	D	B
DC	D	C	D	C
DD	D	D	D	D

For training purposes only!

E. Change of the Polarization Post and Polarization Receptacle Positions - Shell Types A, B, and C

Table 46
POLARIZATION RETAINING PLATE TOOLS

Tool	Type	Size
Driver	Allen Wrench	5/64
	Screwdriver, Hex	5/64
Torque	Wrench with a Hex Driver	5/64

(1) Make a selection of these tools from Table 46:
- A driver
- A torque tool.

(2) Disengage the retaining plate screws from the connector shell. Refer to Figure 105.

BOEING PROPRIETARY - Copyright © Unpublished Work - See title page for details

ASSEMBLY OF BACC65AN, BACC65AP, BACC65AV, AND BACC65AW CONNECTORS

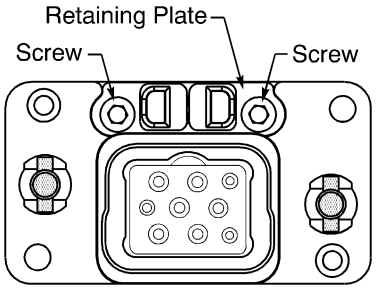

LOCATION OF THE RETAINING PLATE SCREWS
Figure 105

(3) Remove the retaining plate.

(4) Remove the posts or the receptacles.

(5) In the correct polarization position, align the polarization posts or the polarization receptacles with the slots in the retaining plate.

Refer to:

- Table 44 for the polarization codes and positions
- Figure 102 for the polarization positions
- Figure 106.

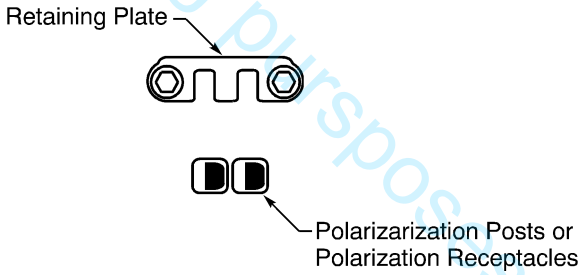

ALIGNMENT OF THE POLARIZATION POSTS OR POLARIZATION RECEPTACLES WITH THE SLOTS IN THE RETAINING PLATE
Figure 106

(6) Put the posts or the receptacles in the slots. Refer to Figure 107.

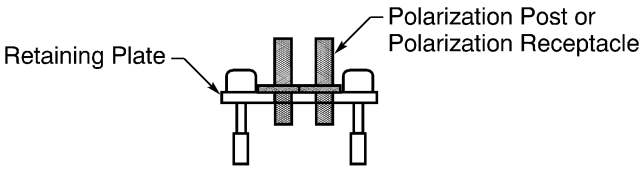

POSITION OF THE POLARIZATION POSTS OR POLARIZATION RECEPTACLES IN THE RETAINING PLATE
Figure 107

(7) Engage the threads of each retaining plate screw and screw hole in the connector shell. Refer to Figure 108.

For training purposes only!

BOEING PROPRIETARY - Copyright © Unpublished Work - See title page for details

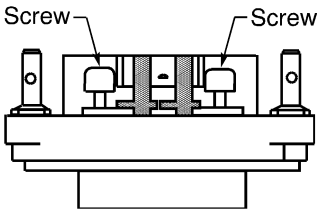

POSITION OF THE POLARIZATION HARDWARE IN THE CONNECTOR SHELL
Figure 108

(8) Torque each screw 7 inch-pounds ±1 inch-pound.

F. Change of the Polarization Post and Polarization Receptacle Positions - Shell Types D, E and F

(1) Pull the polarizing posts or the polarizing receptacles from the connector shell. Refer to Figure 109.

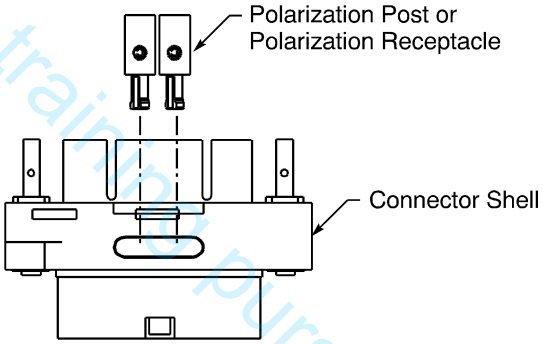

REMOVAL OF THE POLARIZATION POSTS OR THE POLARIZATION RECEPTACLES FROM THE CONNECTOR SHELL
Figure 109

(2) In the correct polarization position, align the posts or the receptacles with the polarization holes in the connector shell.

Refer to:

- Table 45 for the polarization codes and positions
- Figure 104 for the polarization positions
- Figure 110.

For training purposes only!

BOEING PROPRIETARY - Copyright © Unpublished Work - See title page for details

ASSEMBLY OF BACC65AN, BACC65AP, BACC65AV, AND BACC65AW CONNECTORS

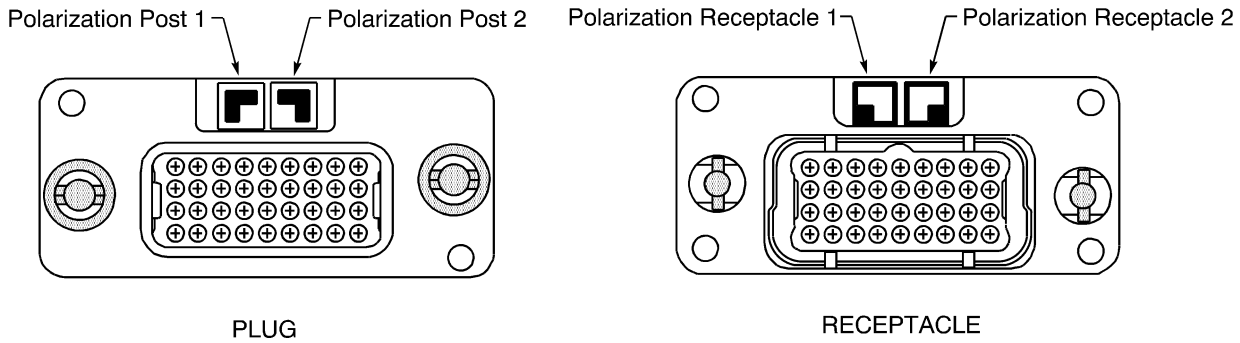

LOCATION OF THE POLARIZATION POSTS OR THE POLARIZATION RECEPTACLES ON THE CONNECTOR SHELL
Figure 110

(3) Push the posts or the receptacles into the holes in the connector shell. Refer to Figure 111 and Figure 112.

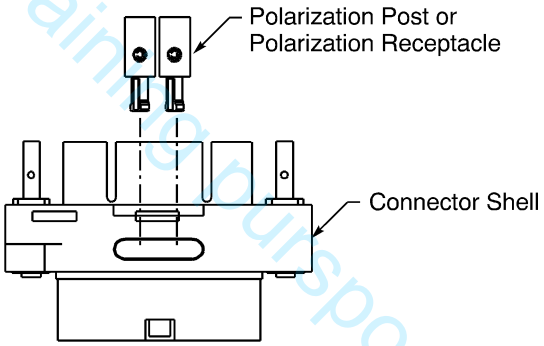

ALIGNMENT OF THE POLARIZATION POSTS OR POLARIZATION RECEPTACLES WITH THE CONNECTOR SHELL
Figure 111

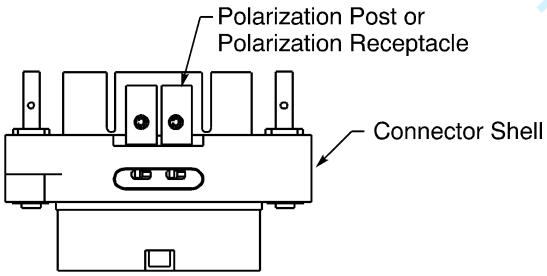

POSITION OF THE POLARIZATION POSTS OR POLARIZATION RECEPTACLES IN THE CONNECTOR SHELL
Figure 112

For training purposes only!

BOEING PROPRIETARY - Copyright © Unpublished Work - See title page for details

ASSEMBLY OF BACC65AN, BACC65AP, BACC65AV, AND BACC65AW CONNECTORS

G. Change of the Polarization Code in the Part Number on the Connector - Shell Types A, B, and C

Table 47
NECESSARY MATERIALS

Material	Part Number	Supplier
Ink	No. 68 Fast Dry	Independent
	No. 73X NW Opaque	Independent
	No. 73X Opaque	Independent
Paint, Clear	683-3-2	Akzo
	Clear Lacquer	Tartan
	EC-776	3M
	EC-776SR	3M
Pen	Permanent Ink Pen, Ultra Fine Point	Sanford Sharpie

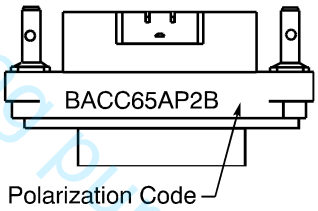

LOCATION OF THE POLARIZATION CODE ON THE CONNECTOR
Figure 113

Refer to Figure 113.

(1) Make a selection of these materials from Table 47:
- An ink or a permanent ink pen
- A clear paint.

(2) If the polarization code in the part number on the connector is incorrect:
  (a) Apply a layer of ink on the code on the connector shell.
  Make sure that the code cannot be read.
  (b) Write the new code on the connector shell adjacent to the layer of ink.

(3) If the part number on the connector does not have a polarization code, write the code on the connector shell at the end of the part number.

(4) Let the ink dry for a minimum of 10 minutes.

(5) Apply a layer of the clear paint on the part number on the connector shell.

CAUTION: DO NOT APPLY PAINT ON THE CONTACTS. PAINT ON THE SURFACE OF A CONTACT CAN CAUSE UNSATISFACTORY ELECTRICAL PERFORMANCE OF THE CONTACT.

(6) Let the paint dry before the connector shell is touched or moved.

For training purposes only!

BOEING PROPRIETARY - Copyright © Unpublished Work - See title page for details

7. INSPECTION AND CLEANING OF A FIBER OPTIC ALIGNMENT SLEEVE INSERT

A. Inspection and Cleaning of a Fiber Optic Alignment Sleeve Insert

Refer to Subject 20-74-02.

8. CONNECTOR INSTALLATION

A. Equipment Identification

The identification label on the wire harness near the connector can have this information:

- The equipment number for the connector or the connector insert
- The mate-with disconnect panel number
- The connector position on the panel
- The mate-with nomenclature
- The wire harness number.

Refer to Figure 114.

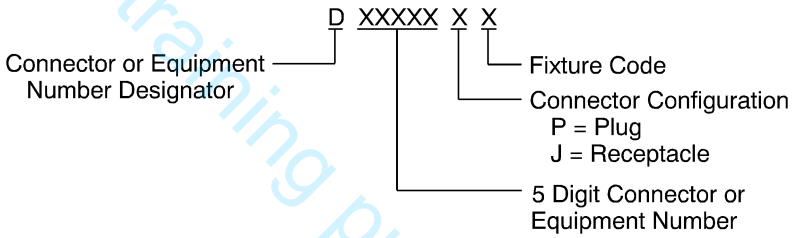

EQUIPMENT NUMBER STRUCTURE
Figure 114

B. Installation of the Receptacle

For the installation of the receptacle with a ground block, refer to Paragraph 8.C.

Table 48
RECEPTACLE INSTALLATION FASTENERS

Fastener	Part Number	Supplier
Screw	NAS1802-6-()	QPL
	BACS12HN6U()	Boeing

Table 49
NECESSARY TOOLS

Tool	Type	Size (inch)
Driver	Phillips Head Screwdriver	-
	Socket Wrench	1/4
Torque	Phillips Head Torque Screwdriver	-
	Socket Torque Wrench	1/4

For training purposes only!

BOEING PROPRIETARY - Copyright © Unpublished Work - See title page for details

ASSEMBLY OF BACC65AN, BACC65AP, BACC65AV, AND BACC65AW CONNECTORS

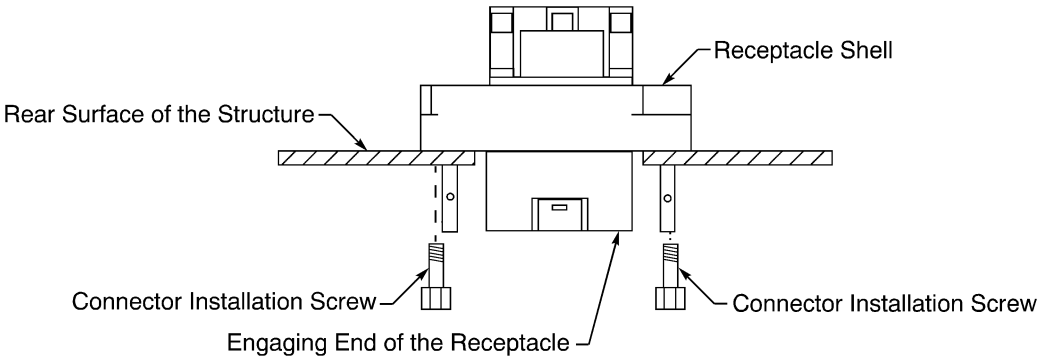

ALIGNMENT OF THE RECEPTACLE AND THE STRUCTURE
Figure 115

For training purposes only!

Refer to Figure 115.

(1) Make a selection of two screws from Table 48.

Make sure that the screws are new.

CAUTION: SCREWS THAT ARE NOT NEW CAN CAUSE UNSATISFACTORY PERFORMANCE OF THE CONNECTOR.

(2) Make a selection of these tools from Table 49:
- A driver
- A torque tool.

(3) From the rear side of the structure, align the mounting holes of the receptacle flange with the holes in the structure.

(4) Put the connector shell in the cutout.

(5) From the front side of the structure, install a screw in each of the two mounting holes.

(6) Tighten each screw until:
- The screw head is against the structure
- The connector flange is fully against the structure.

Make sure that the flange of the receptacle is fully flat against the surface of the structure.

(7) Torque each screw 13 inch-pounds to 15 inch-pounds.

C. Installation of the Receptacle with a Ground Block

(1) Prepare the faying surfaces necessary for the electrical bond of the receptacle shell to the structure.

Refer to:
- Figure 116 for the connector receptacle flange
- Figure 117 for the rear surface of the structure
- Figure 118 for the front surface of the structure
- Subject 20-20-00 for the procedures to prepare the faying surface.

BOEING PROPRIETARY - Copyright © Unpublished Work - See title page for details

ASSEMBLY OF BACC65AN, BACC65AP, BACC65AV, AND BACC65AW CONNECTORS

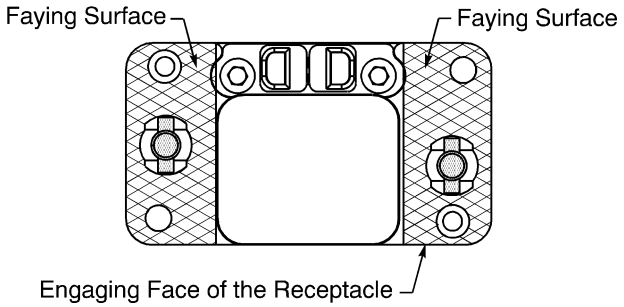

FAYING SURFACE ON THE RECEPTACLE
Figure 116

For training purposes only!

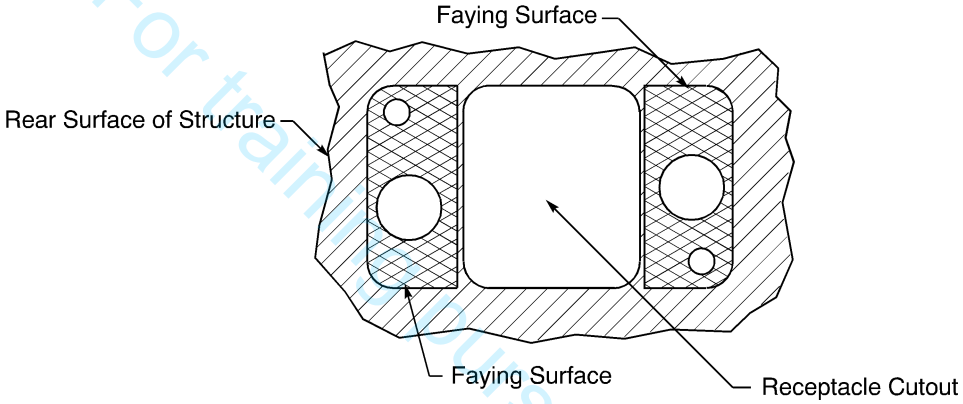

FAYING SURFACE ON THE REAR SIDE OF THE STRUCTURE
Figure 117

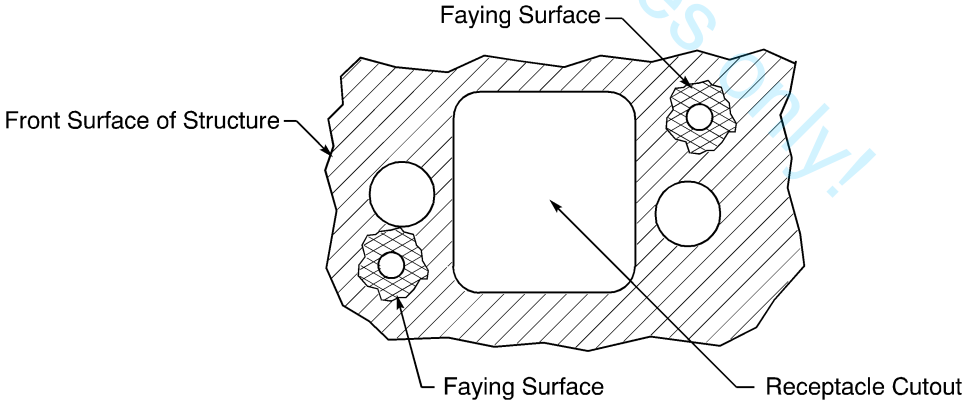

FAYING SURFACE ON THE FRONT SIDE OF THE STRUCTURE
Figure 118

(2) Install the receptacle. Refer to Paragraph 8.B.

(3) Do the electrical bond test for receptacle connector shells. Refer to Subject 20-20-00 and Figure 119.

BOEING PROPRIETARY - Copyright © Unpublished Work - See title page for details

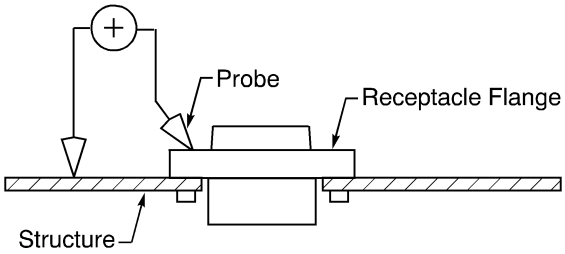

TEST POINTS FOR THE RECEPTACLE TO STRUCTURE BOND
Figure 119

(4) If the bond has a resistance greater than the maximum for connector shell bonds specified in Subject 20-20-00:
- Remove the receptacle from the structure. Refer to Paragraph 4.B.
- Do Step (1) through Step (3) again.

D. Plug and Receptacle Connection

Before mating a plug and a receptacle that have fiber optic termini, inspect and, if necessary, clean the fiber optic termini. Refer to Subject 20-12-20.

Table 50
NECESSARY TOOLS

Tool	Type	Size (inch)
Driver	Allen Wrench	3/32
	Screwdriver, Hex	3/32

(1) Make a selection of a driver from Table 50.

NOTE: The driver can have a ball style end.

NOTE: A metric size hex tool is not applicable.

(2) On the plug connector, put the coupling indicator on each coupling fastener in the position that is perpendicular to the coupling indicator on the plug connector shell. Refer to Figure 120.

NOTE: On an unmated plug connector, the coupling fasteners can be turned by hand.

For training purposes only.

BOEING PROPRIETARY - Copyright © Unpublished Work - See title page for details

ASSEMBLY OF BACC65AN, BACC65AP, BACC65AV, AND BACC65AW CONNECTORS

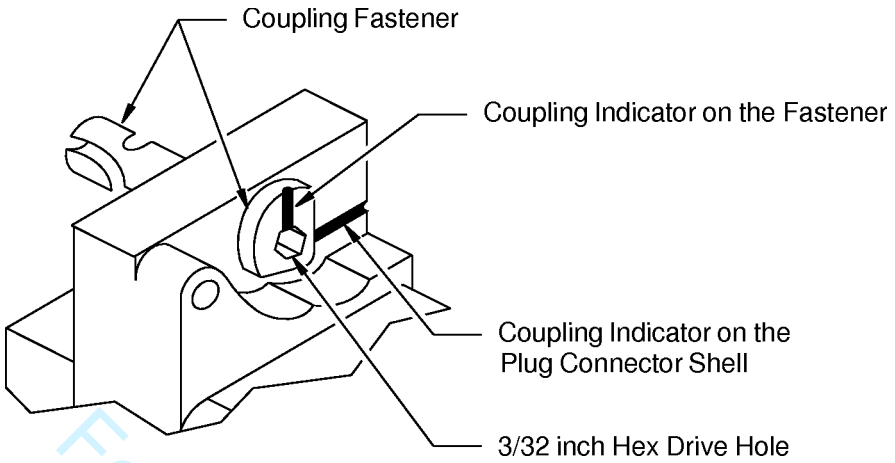

COUPLING INDICATOR ON THE FASTENER PERPENDICULAR TO THE COUPLING INDICATOR ON THE PLUG CONNECTOR SHELL
Figure 120

(3) Align the polarization hardware of the plug with the polarization hardware of the receptacle.

(4) Push the plug forward until the front surface of the insert cavity of the receptacle is against the shell of the plug.

Make sure that the plug and the receptacle are fully engaged.

CAUTION: THE PLUG AND THE RECEPTACLE MUST BE FULLY ENGAGED. IF THE PLUG AND THE RECEPTACLE ARE NOT FULLY ENGAGED, DAMAGE TO A COUPLING FASTENER CAN OCCUR.

(5) With the 3/32 inch Allen wrench or hex driver, on the plug connector, turn one of the coupling fasteners 1/4 turn in the clockwise direction to the locked position. Refer to Figure 121.

Make sure that the coupling indicator on the fastener is aligned with the coupling indicator on the plug connector shell.

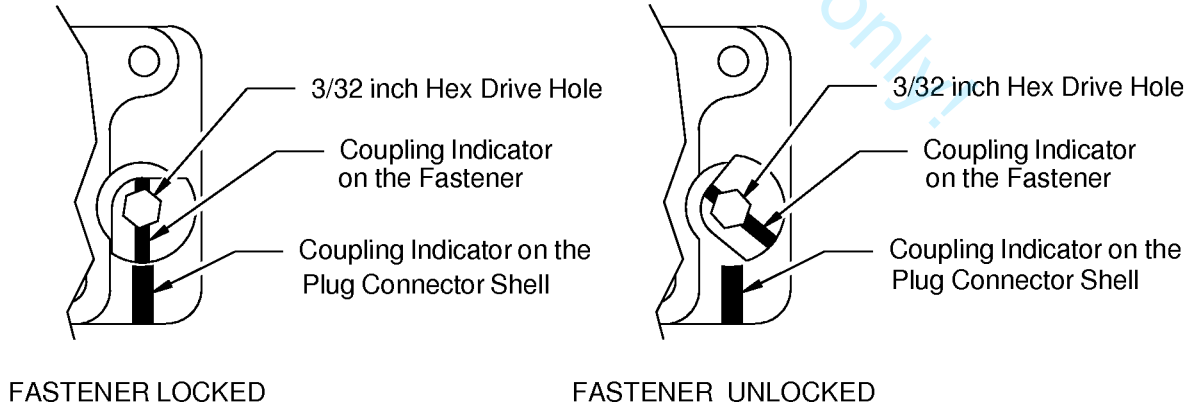

COUPLING INDICATOR POSITIONS
Figure 121

(6) Do Step (5) again for the other coupling fastener to lock the plug and receptacle together.

BOEING PROPRIETARY - Copyright © Unpublished Work - See title page for details
For training purposes only!

(7) Examine the engaging end of the coupling fastener.
Make sure that the engaging end of each coupling fastener has no damage.

9. APPROVED TOOL SUPPLIERS

A. Contact Removal Tools

Table 51
CONTACT REMOVAL TOOL SUPPLIERS

Removal Tool	Supplier
ATR2079	Astro
ATR2080	Astro
M81969/14-11	QPL
RRX20B	Russtech

B. Contact Crimp Tools

Table 52
CRIMP TOOL SUPPLIERS

Crimp Tool	Supplier
282 557 020	Radiall
282 581 007	Radiall
282 581 008	Radiall
282 581 009	Radiall
282588	Radiall
4046A	Pico
414DA-8N	Pico
HX23	Daniels
M22520/1-01	QPL
M22520/2-01	QPL
M22520/1-02	QPL
M22520/1-11	QPL
M22520/5-01	QPL
M22520/2-08	QPL
M22520/2-11	QPL
M22520/2-23	QPL
M22520/5-01	QPL
M22520/5-05	QPL

For training purposes only!

BOEING PROPRIETARY - Copyright © Unpublished Work - See title page for details

Table 52 (continued)

Crimp Tool	Supplier
M22520/5-27	QPL
M22520/5-35	QPL
M22520/5-45	QPL
M22520/5-61	QPL
M22520/23-01	QPL
M22520/23-02	QPL
PICO400B	Pico
WA22	Daniels
WA22LC	Daniels
WA27F	Daniels

For training purposes only

C. Contact Insertion Tools

Table 53
CONTACT INSERTION TOOL SUPPLIERS

Insertion Tool	Supplier
CET-12-4	ITT Cannon
CIET-16	ITT Cannon
CIET-20HDL	ITT Cannon
DAK266J	Daniels
DAK83-20	Daniels
M81969/1-01	QPL
M81969/14-03	QPL
M81969/14-04	QPL
M81969/14-11	QPL
M81969/39-01	QPL
ST2220-2-28	Boeing

BOEING PROPRIETARY - Copyright © Unpublished Work - See title page for details

D. Special Tools

Table 54
SPECIAL TOOL SUPPLIERS

Tool	Supplier
282 521 002	Radiall
600-061	Glenair
A30199	Band-It Idex

For training pursposes only!

BOEING PROPRIETARY - Copyright © Unpublished Work - See title page for details

ASSEMBLY OF BACC65BJ AND BACC65BK CONNECTORS

Paragraph		Page
1.	**GENERAL DATA**	**1**
A.	Damage Conditions - Rear Face of the Insert	1
B.	Damage Conditions - Front Face of the Insert	1
C.	Damage Conditions - Strain Relief Clamp	1
D.	Minimum Wire O.D. for an Environmentally Sealed Connector	1
2.	**PART NUMBERS AND DESCRIPTION**	**1**
A.	Connector Shell Part Numbers	1
B.	BACC65BJ and BACC65BK Connector Description	2
C.	Connector Shell Component Part Numbers	5
D.	Connector Insert Part Numbers	5
E.	Insert Contact Part Numbers	5
F.	Ground Block Contact Part Numbers	5
G.	Coax Contact Part Numbers	6
H.	Size 8 Twinax Contacts	6
I.	Size 8 Quadrax Contacts	6
J.	Fiber Optic Contact Terminus Part Numbers	6
K.	Fiber Optic Alignment Sleeve Insert Part Numbers	6
L.	EMI Backshell Part Numbers	7
3.	**INSERT CONFIGURATIONS**	**7**
A.	BACI10AL and BACI10AM Inserts	7
4.	**CONNECTOR DISASSEMBLY**	**7**
A.	Connector Separation	7
B.	Removal of the Receptacle	9
C.	Removal of the Alignment Sleeve Insert	12
D.	Insert Removal	12
E.	Seal Plug and Seal Rod Removal	14
F.	Contact Removal	14
G.	EMI Backshell Removal	14
5.	**CONNECTOR ASSEMBLY**	**18**
A.	Shield Ground Wire Assembly	18
B.	Shield Ground Wire Assembly for Shield Termination at the EMI Backshell	19
C.	Shield Ground Wire Assembly for Raychem 55A6160-() Cable	20
D.	Shield Ground Wire Assembly for BMS13-60 Type 27 Class 1 Wire	23
E.	Shield Ground Wire Assembly for Class 3 AWG 10 Cable in a BACI10AL03P Insert	27
F.	Contact Assembly	29
G.	Ground Block Contact Assembly	30
H.	Size 5 Coax Contact Assembly	31
I.	Assembly of Size 5 Power Contacts	31
J.	Assembly of Size 8 Coax Contacts	31

20-74-14 CONTENTS

BOEING PROPRIETARY - Copyright © Unpublished Work - See title page for details

For training purposes only!

ASSEMBLY OF BACC65BJ AND BACC65BK CONNECTORS

Paragraph		Page
5.	**CONNECTOR ASSEMBLY (continued)**	
K.	Size 8 Twinax Contact Assembly	31
L.	Insertion of Size 8 Coax and Size 8 Twinax Contacts	31
M.	Size 8 Quadrax Contact Assembly	31
N.	Contact Insertion	31
O.	Insertion of Fiber Optic Contact Termini	32
P.	Size 5 Coax Contact Insertion	32
Q.	Installation of Size 8 Quadrax Contacts	32
R.	Seal of an Empty Contact Cavity	32
S.	Insert Installation	32
T.	Integral Strain Relief Assembly	34
U.	Installation of the Fiber Optic Alignment Sleeve Insert	35
V.	Installation of the BACC10MR( ) EMI Backshells	35
W.	Shield Ground Wire Termination	37
X.	Installation of the Overall Heat Shrinkable Sleeve	44
6.	**CONNECTOR POLARIZATION**	**45**
A.	Connector Polarization:	45
B.	Polarization Post and Polarization Receptacle Positions	46
C.	Change of the Polarization Post and Polarization Receptacle Positions	48
7.	**CONNECTOR INSTALLATION**	**49**
A.	Equipment Identification	49
B.	Installation of the Receptacle	49
C.	Plug and Receptacle Connection	53
8.	**APPROVED TOOL SUPPLIERS**	**55**
A.	Contact Removal Tools	55
B.	Contact Crimp Tools	55
C.	Contact Insertion Tools	56
D.	Special Tools	56

For Training Purposes Only!

20-74-14 CONTENTS

BOEING PROPRIETARY - Copyright © Unpublished Work - See title page for details

ASSEMBLY OF BACC65BJ AND BACC65BK CONNECTORS

1. GENERAL DATA

A. Damage Conditions - Rear Face of the Insert

Refer to Subject 20-74-02.

B. Damage Conditions - Front Face of the Insert

Refer to Subject 20-74-02.

C. Damage Conditions - Strain Relief Clamp

The strain relief clamp must be replaced if:

- The clamp has a crack
- The wire harness tie tab is broken.

A saddle bar of a strain relief clamp must be replaced if:

- The saddle bar screw hole threads are damaged
- The saddle bar has a crack.

D. Minimum Wire O.D. for an Environmentally Sealed Connector

Refer to Subject 20-74-02.

2. PART NUMBERS AND DESCRIPTION

A. Connector Shell Part Numbers

Table 1
CONNECTOR SHELL PART NUMBERS

Boeing Standard	Connector Type	Description
BACC65BJ-E	Plug	Nickel Plated Composite, without shield ground block
BACC65BJ-F	Plug	Nickel Plated Composite, with shield ground block
BACC65BK-E	Receptacle	Nickel Plated Composite, without shield ground block
BACC65BK-F	Receptacle	Nickel Plated Composite, with ground block

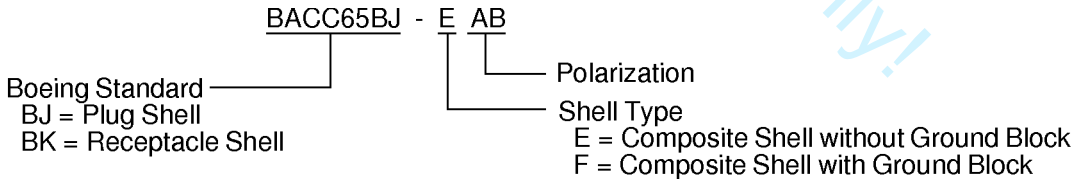

CONNECTOR PART NUMBER STRUCTURE
Figure 1

Table 2
APPROVED SUPPLIERS OF BOEING STANDARD CONNECTOR SHELLS

Connector	Supplier
BACC65BJ-E	Radiall
BACC65BJ-F	Radiall

BOEING PROPRIETARY - Copyright © Unpublished Work - See title page for details
For training purposes only!

Table 2 (continued)

Connector	Supplier
BACC65BK-E	Radiall
BACC65BK-F	Radiall

B. BACC65BJ and BACC65BK Connector Description

Refer to Figure 2 and Figure 3 for the configuration of the BACC65BJ plug and BACC65BK receptacle.

The BACC65BJ and BACC65BK connectors have these technical features:

- A metallized composite shell
- An integral EMI ground spring on the plug shell
- Shield ground wire terminations on some versions of the plug and the receptacle
- A slide latch mechanism to attach the plug to the receptacle
- A removable insert
- Rear insertion and removal of the insert assembly
- Size 22, 20, 16, 12, and 5 rear release, rear removal, crimp type contacts
- Size 5 coax contacts, rear release and rear removal
- Size 8 Quadrax contacts
- Size 16 fiber optic termini
- Size 22, 20, 16, and 12 rear release, rear removal, crimp type contacts
- A removable EMI backshell when there is no ground block
- 16 polarization positions.

For training purposes only!

BOEING PROPRIETARY - Copyright © Unpublished Work - See title page for details

ASSEMBLY OF BACC65BJ AND BACC65BK CONNECTORS

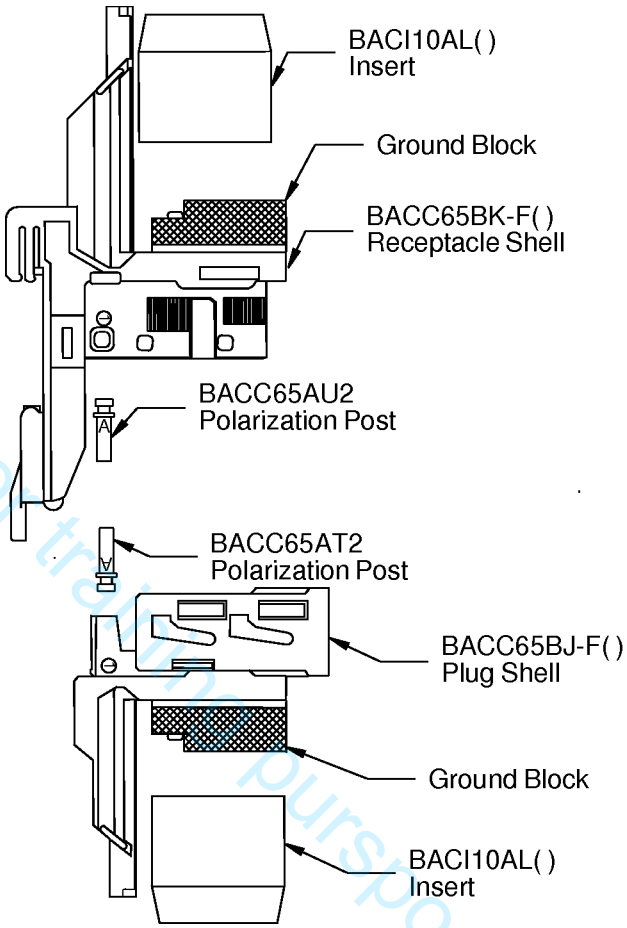

BACC65BJ-F( ) AND BACC65BK-F( ) CONNECTOR CONFIGURATIONS
Figure 2

For training purposes only!

BOEING PROPRIETARY - Copyright © Unpublished Work - See title page for details

ASSEMBLY OF BACC65BJ AND BACC65BK CONNECTORS

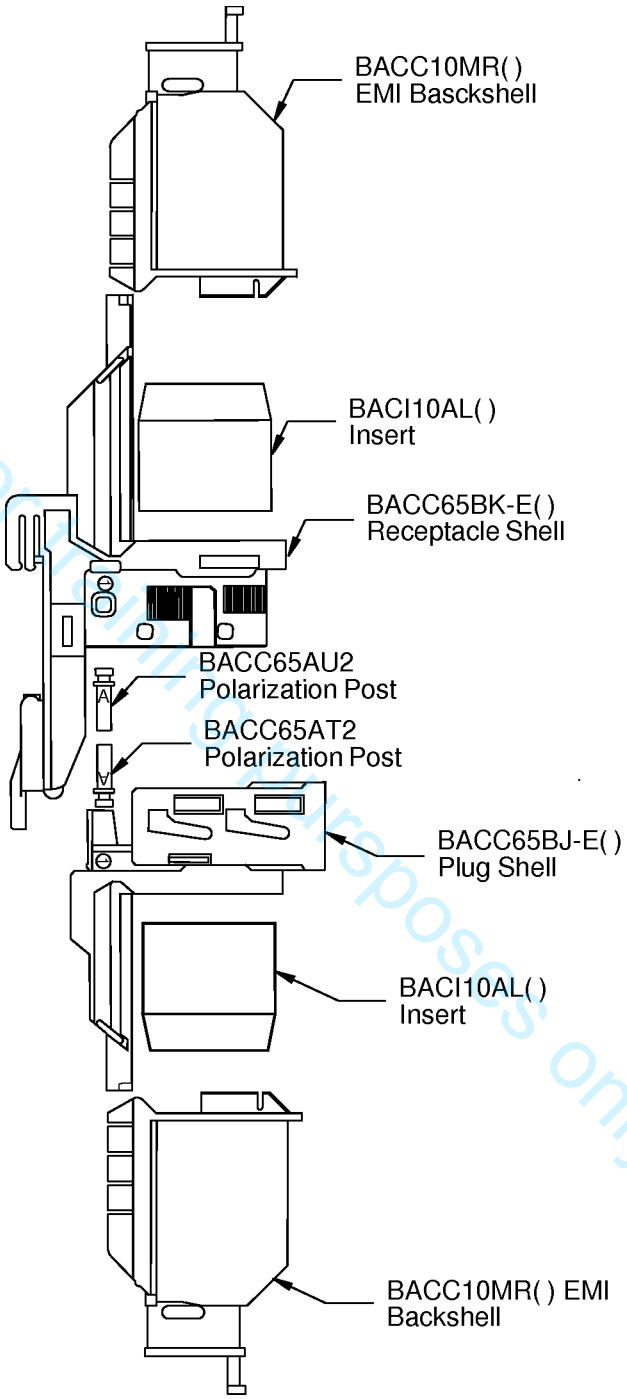

For training purposes only!

BACC65BJ-E( ) AND BACC65BK-E( ) CONNECTOR CONFIGURATION
Figure 3

BOEING PROPRIETARY - Copyright © Unpublished Work - See title page for details

ASSEMBLY OF BACC65BJ AND BACC65BK CONNECTORS

C. Connector Shell Component Part Numbers

Table 3
CONNECTOR SHELL COMPONENT PART NUMBERS

Component	Part Number or Standard	Applicable Connector		Supplier
		Part Number	Shell Type	
Polarization Post	BACC65AT2	BACC65BJ	E and F	QPL
Polarization Receptacle	BACC65AU2	BACC65BK	E and F	QPL

Table 4
APPROVED SUPPLIERS OF BOEING STANDARD CONNECTOR SHELL COMPONENTS

Boeing Standard	Supplier
BACC65AT	RadiaII
BACC65AU	RadiaII

For training purposes only!

D. Connector Insert Part Numbers

Refer to Subject 20-74-02.

E. Insert Contact Part Numbers

Refer to Subject 20-74-02.

F. Ground Block Contact Part Numbers

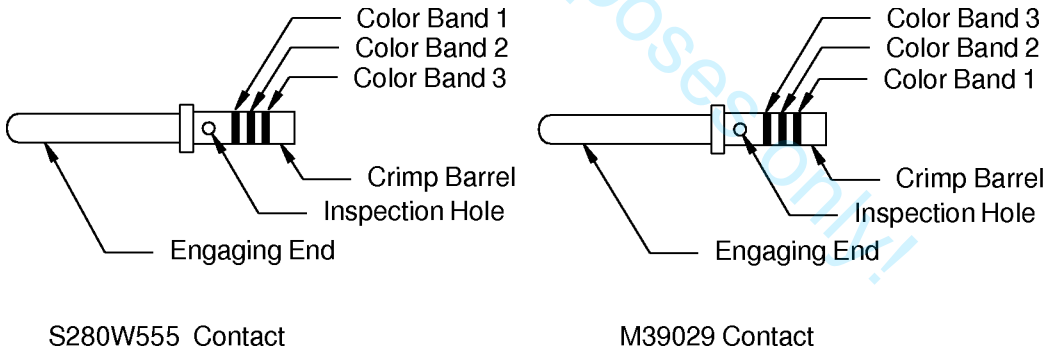

S280W555 Contact M39029 Contact

GROUND BLOCK CONTACTS
Figure 4

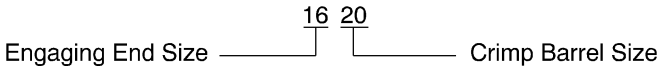

EXAMPLE OF A CONTACT SIZE
Figure 5

BOEING PROPRIETARY - Copyright © Unpublished Work - See title page for details

Table 5
GROUND BLOCK CONTACT PART NUMBERS

Contact Size		Contact Type	Part Number	Supplier	Color Code	
Engaging End	Crimp Barrel				Band	Color
16	20	Pin	M39029/1-101	QPL	1	Brown
					2	Black
					3	Brown
			S280W555-920	Boeing	1	Red
					2	Red
					3	Red
	18	Pin	S280W555-918	Boeing	1	Red
					2	White
					3	Red

Table 6
APPROVED SUPPLIERS OF BOEING STANDARD GROUND BLOCK CONTACTS

Contact	Supplier
S280W555-918	Burndy
	Tri Star
S280W555-920	Burndy
	Tri Star

For training purposes only!

G. Coax Contact Part Numbers

Refer to Subject 20-74-02.

H. Size 8 Twinax Contacts

Refer to Subject 20-74-02.

I. Size 8 Quadrax Contacts

Refer to Subject 20-74-02.

J. Fiber Optic Contact Terminus Part Numbers

Refer to Subject 20-74-02.

K. Fiber Optic Alignment Sleeve Insert Part Numbers

Refer to Subject 20-74-02.

BOEING PROPRIETARY - Copyright © Unpublished Work - See title page for details

L. EMI Backshell Part Numbers

Table 7
EMI BACKSHELL PART NUMBERS

Boeing Standard	Description
BACC10MR1	Straight

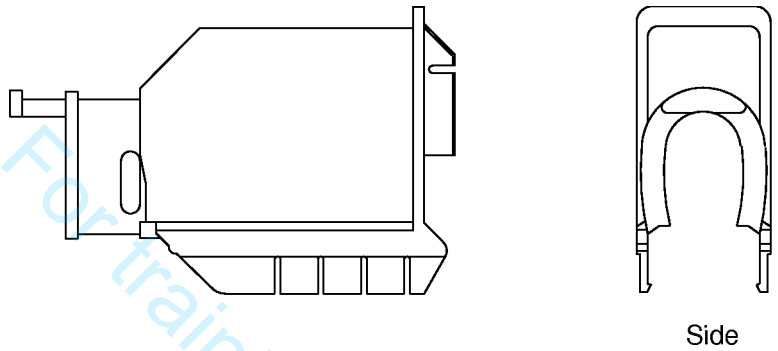

BACC10MR EMI BACKSHELLS
Figure 6

Table 8
APPROVED SUPPLIERS OF BOEING STANDARD EMI BACKSHELLS

Backshell	Supplier
BACC10MR()	Radiall

3. INSERT CONFIGURATIONS

A. BACI10AL and BACI10AM Inserts

Refer to Subject 20-74-02.

4. CONNECTOR DISASSEMBLY

A. Connector Separation

Table 9
NECESSARY TOOLS

Tool	Dimensions (inch)		Part Number	Supplier
	Overall Length	Tip Width		
Screwdriver, Flat Tip	4.75	0.025	SDD204O	Snap-on

(1) Make a selection of a screwdriver from Table 9.
An equivalent tool is a satisfactory alternative.

(2) Find the slot in the top of the latch of the plug connector. Refer to Figure 7

For training purposes only!

BOEING PROPRIETARY - Copyright © Unpublished Work - See title page for details

ASSEMBLY OF BACC65BJ AND BACC65BK CONNECTORS

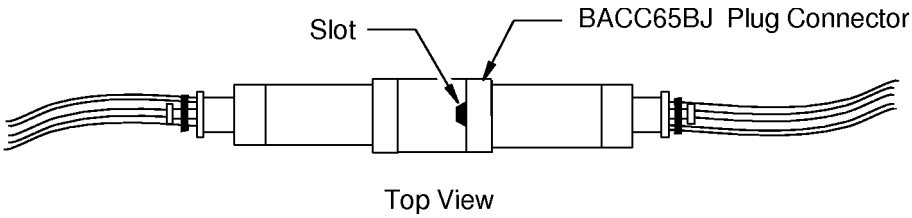

LOCATION OF THE SLOT IN THE TOP OF THE LATCH OF THE PLUG CONNECTOR
Figure 7

(3) If there is sufficient clearance near the connector, put the tip of the screwdriver in the slot. Refer to Figure 8.

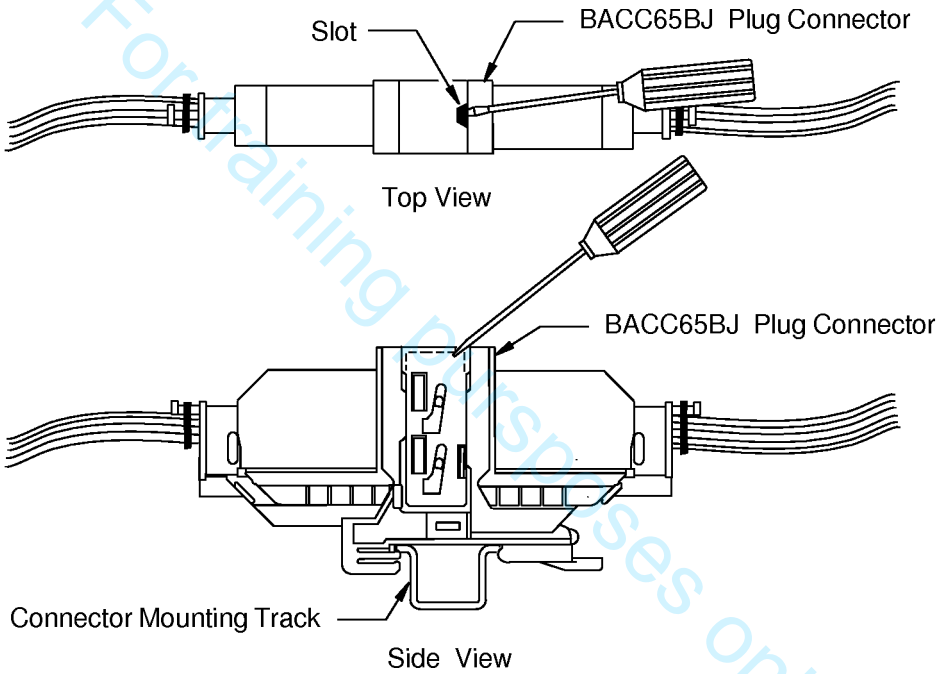

POSITION OF THE TIP OF THE SCREWDRIVER IN THE SLOT AT THE TOP OF THE LATCH
Figure 8

For training purposes only!

(4) If there is not sufficient clearance:

(a) Remove the connector mounting track from the structure.

NOTE: The mounting track is held in its position by two fasteners at each end of the track.

(b) Put the tip of the screwdriver in the slot in the latch of the connector. Refer to Figure 8.

(5) Move the handle of the screwdriver to push the latch to the unlocked position. Refer to Figure 9.

BOEING PROPRIETARY - Copyright © Unpublished Work - See title page for details

ASSEMBLY OF BACC65BJ AND BACC65BK CONNECTORS

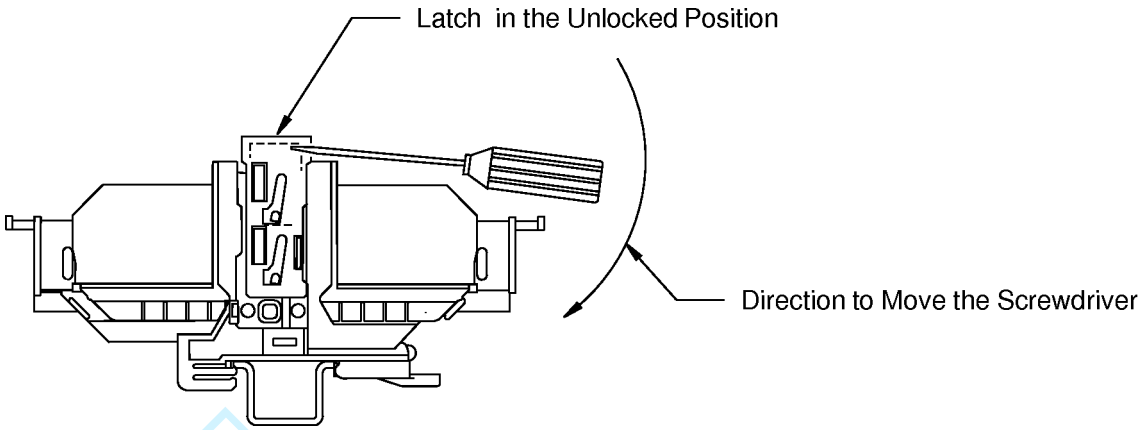

POSITION OF THE SCREWDRIVER FOR THE LATCH IN THE UNLOCKED POSITION
Figure 9

(6) Pull the plug straight away from the receptacle. Refer to Figure 10.

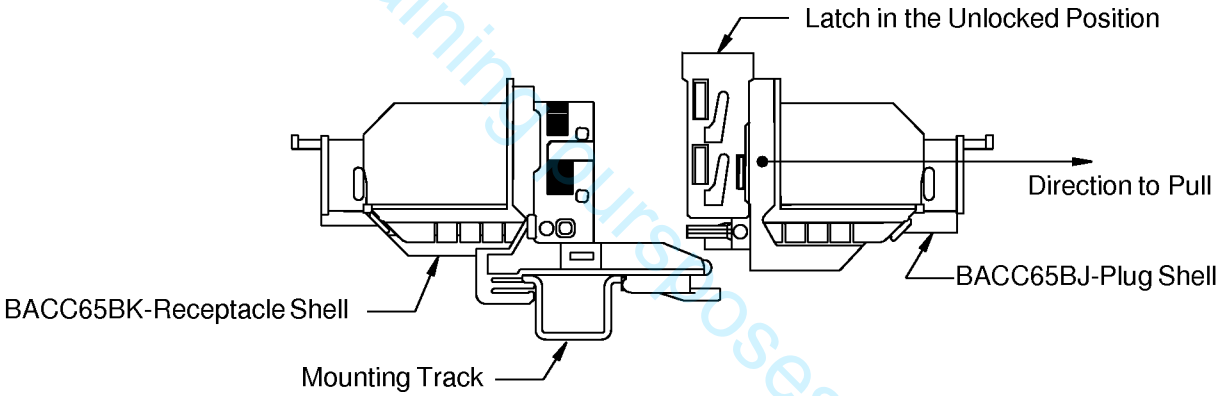

SEPARATION OF THE PLUG AND THE RECEPTACLE
Figure 10

B. Removal of the Receptacle

Table 10
NECESSARY TOOLS

Tool	Example	Maximum Shaft Diameter (inch)
A Shaft that Has a Handle	Screwdriver, Hex or Flat Blade	1/8

(1) Push the spring latch to release the connector from the mounting track. Refer to Figure 11 for the direction to push the latch.

For training purposes only!

BOEING PROPRIETARY - Copyright © Unpublished Work - See title page for details

ASSEMBLY OF BACC65BJ AND BACC65BK CONNECTORS

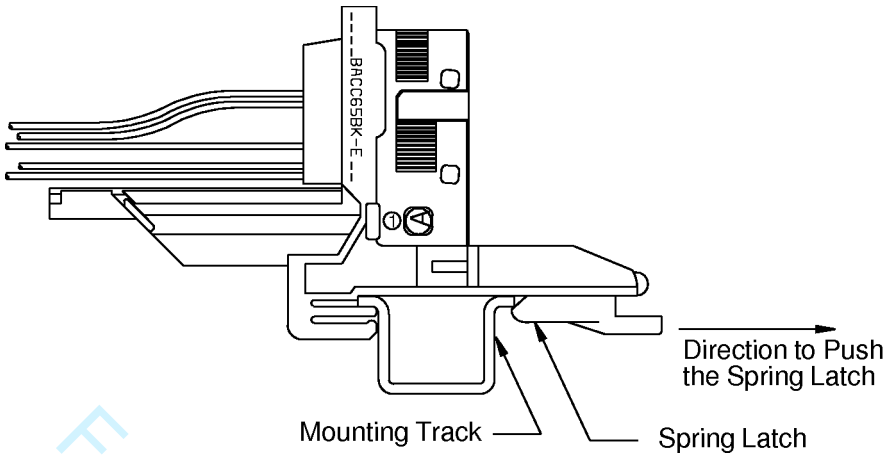

DIRECTION TO PUSH THE SPRING LATCH FOR RECEPTACLE REMOVAL
Figure 11

(2) If the latch does not move, make a selection of a tool from Table 10 to release the connector from the mounting track.

(3) Put the end of the tool in the hole in the end of the spring latch. Refer to Figure 12 for location to put the tool.

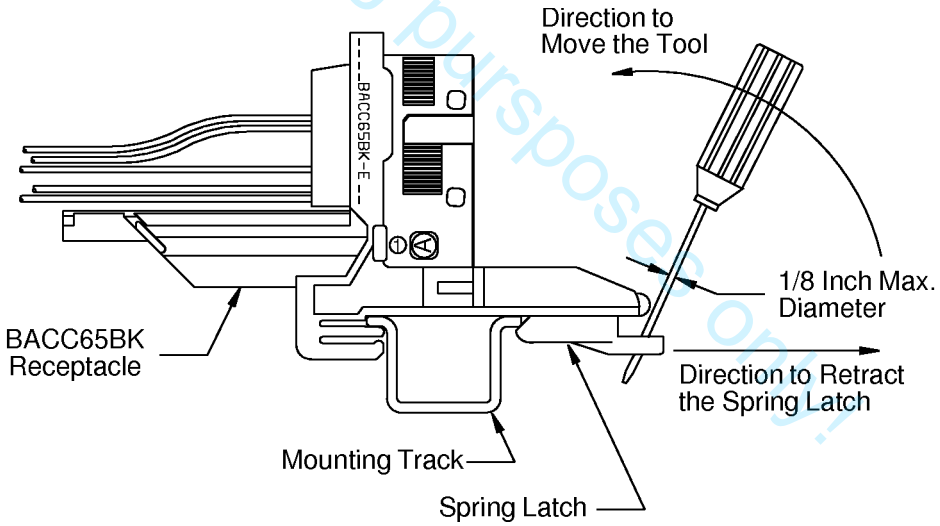

POSITION OF THE TOOL FOR RECEPTACLE REMOVAL STEP 1
Figure 12

(4) Move the handle of the tool toward the connector to release the connector from the track. Refer to Figure 12 and Figure 13 for direction to move the tool.

For training purposes only!

BOEING PROPRIETARY - Copyright © Unpublished Work - See title page for details

ASSEMBLY OF BACC65BJ AND BACC65BK CONNECTORS

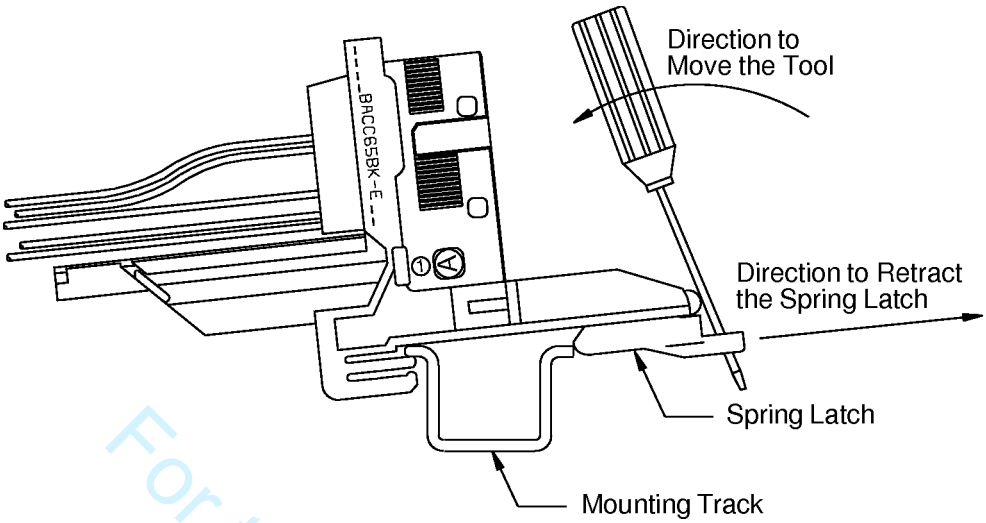

POSITION OF THE TOOL FOR RECEPTACLE REMOVAL STEP 2
Figure 13

(5) Hold the spring latch with a finger, and at the same time, move handle of the tool back away from the connector and pull the tool out of the spring latch. Refer to Figure 14.

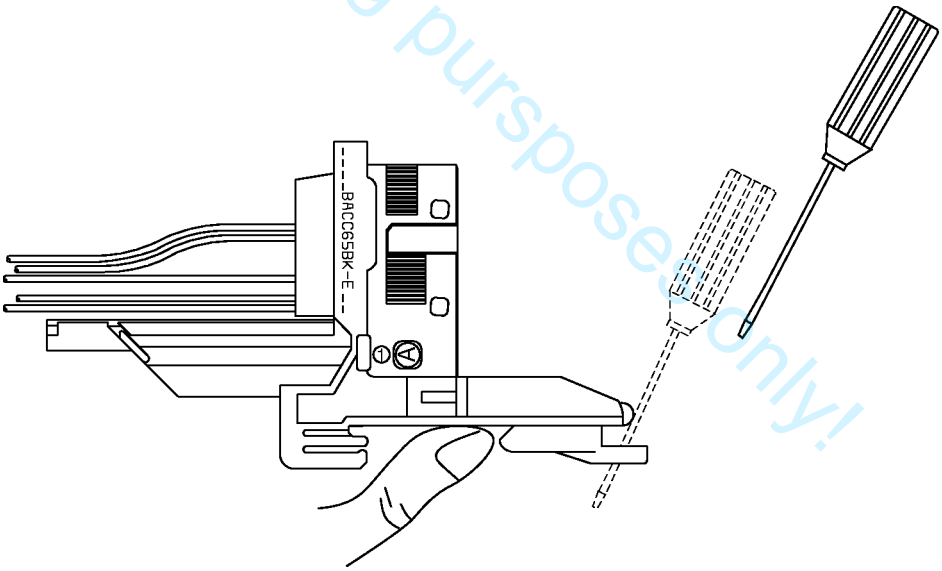

REMOVAL OF THE TOOL FROM THE SPRING LATCH
Figure 14

For training purposes only!

BOEING PROPRIETARY - Copyright © Unpublished Work - See title page for details

C. Removal of the Alignment Sleeve Insert

CAUTION: DO NOT PULL, SHAKE, OR TWIST THE ALIGNMENT SLEEVE INSERT FROM THE CONNECTOR. DAMAGE TO THE CERAMIC FERRULES OF THE CONTACT TERMINI CAN OCCUR.

Table 11
NECESSARY TOOLS

Tool	Type	Size (inch)
Driver	Allen Wrench	5/64
	Screwdriver, Hex	5/64

For training purposes only!

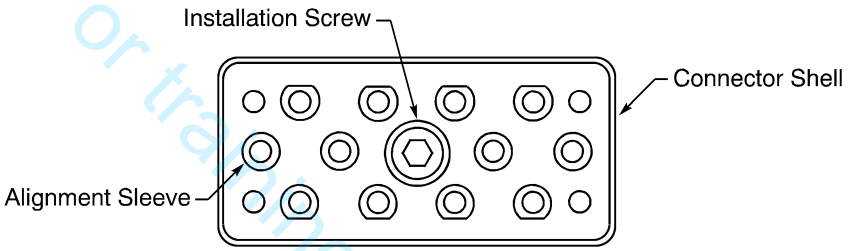

ALIGNMENT SLEEVE INSERT INSTALLATION SCREW
Figure 15

(1) Make a selection of a driver from Table 11.

NOTE: The driver can have a ball type end.

(2) Turn the installation screw in a counterclockwise direction until the screw is disengaged from the face of the connector.

CAUTION: DO NOT SHAKE OR TWIST THE ALIGNMENT SLEEVE INSERT TO REMOVE IT FROM THE CONNECTOR. DAMAGE TO THE CERAMIC FERRULES OF THE CONTACT TERMINI CAN OCCUR.

(3) Put the alignment sleeve insert in a clean plastic bag.

CAUTION: KEEP THE ALIGNMENT SLEEVE INSERT IN A CLEAN PLASTIC BAG UNTIL IT IS INSTALLED IN THE CONNECTOR. CONTAMINATION CAN CAUSE UNSATISFACTORY PERFORMANCE OF THE CONNECTOR.

D. Insert Removal

NOTE: Remove the insert contacts before the insert is removed.

Table 12
INSERT REMOVAL TOOLS

Tool	Part Number
Insert Removal Tool	282 521 002

(1) Make a selection of an insert removal tool from Table 12.

BOEING PROPRIETARY - Copyright © Unpublished Work - See title page for details

ASSEMBLY OF BACC65BJ AND BACC65BK CONNECTORS

(2) Remove the EMI backshell from the connector; refer to Paragraph 4.G.

(3) Remove the ground block contacts from the ground block; refer to Paragraph 4.F.

(4) From the rear of the connector, align the two ends of the removal tool with the rear of the insert. Refer to Figure 16.

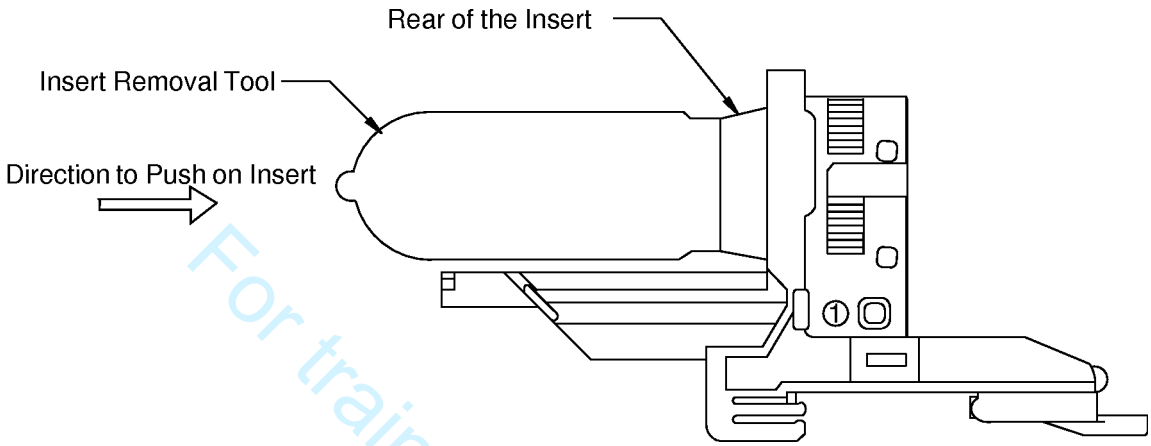

ALIGNMENT OF THE INSERT REMOVAL TOOL
Figure 16

(5) Carefully push the removal tool between the insert cavity and the insert.
Make sure to keep the tool aligned with the insert.

(6) Push the two sides of the tool at the same time into the connector.

(7) Pull the insert removal tool and the insert straight out of the connector. Refer to Figure 17.

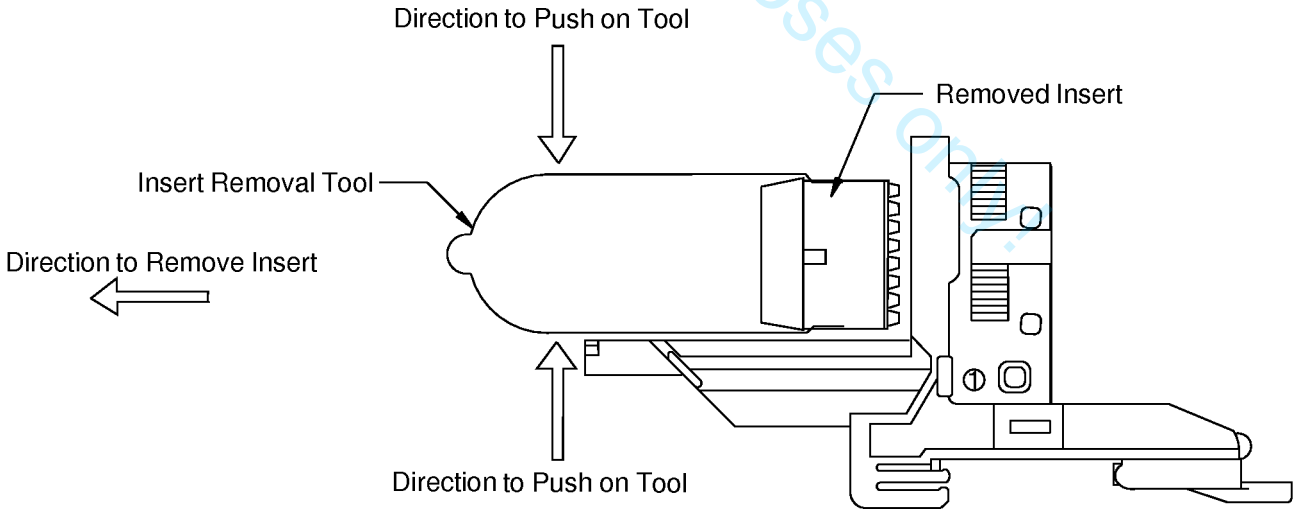

REMOVAL OF THE INSERT
Figure 17

For training purposes only.

BOEING PROPRIETARY - Copyright © Unpublished Work - See title page for details

E. Seal Plug and Seal Rod Removal

Refer to Subject 20-74-02.

F. Contact Removal

This paragraph gives the procedure to remove size 16 contacts from the ground block:

For the procedure to remove contacts from the connector insert, refer to Subject 20-74-02.

Table 13
REMOVAL TOOLS FOR SIZE 16 GROUND BLOCK CONTACTS

Contact Cavity Size	Contact			Removal Tool	
	Engaging End Size	Crimp Barrel Size	Size	Part Number	Color
16	16	18	1618	ATR2080	-
				ATR2079	-
				M81969/14-11	White
				RRX20B	-
		20	1620	ATR2080	-
				ATR2079	-
				M81969/14-11	White
				RRX20B	-

(1) Make a selection of a contact removal tool from Table 13 for size 16 ground block contacts:

CAUTION: DO NOT USE A REMOVAL TOOL THAT HAS A DEFECT. A REMOVAL TOOL THAT HAS A DEFECT CAN CAUSE DAMAGE TO THE GROMMET OR THE RETENTION CLIP.

(2) Remove the plastic tie straps or the wire harness ties that are less than 6 inches from the connector.

(3) Put the tip of the removal tool on the wire near the grommet or the ground block.

(4) Axially align the removal tool and the contact cavity.

(5) Carefully push the removal tool straight into the contact cavity until it stops.

(6) Carefully pull the wire and the removal tool straight out of the contact cavity at the same time.

(7) If the contact is not released:

(a) Pull the contact removal tool out of the contact cavity.

(b) Turn the removal tool approximately 90 degrees.

(c) Do Step (3) through Step (6) again.

G. EMI Backshell Removal

Table 14
EMI BACKSHELL REMOVAL TOOLS

Tool	Supplier
Diagonal Cutter	An available source
Knife	An available source

For training purposes only!

BOEING PROPRIETARY - Copyright © Unpublished Work - See title page for details

ASSEMBLY OF BACC65BJ AND BACC65BK CONNECTORS

(1) Remove the heat shrinkable sleeve from the wire harness. Refer to Figure 18.

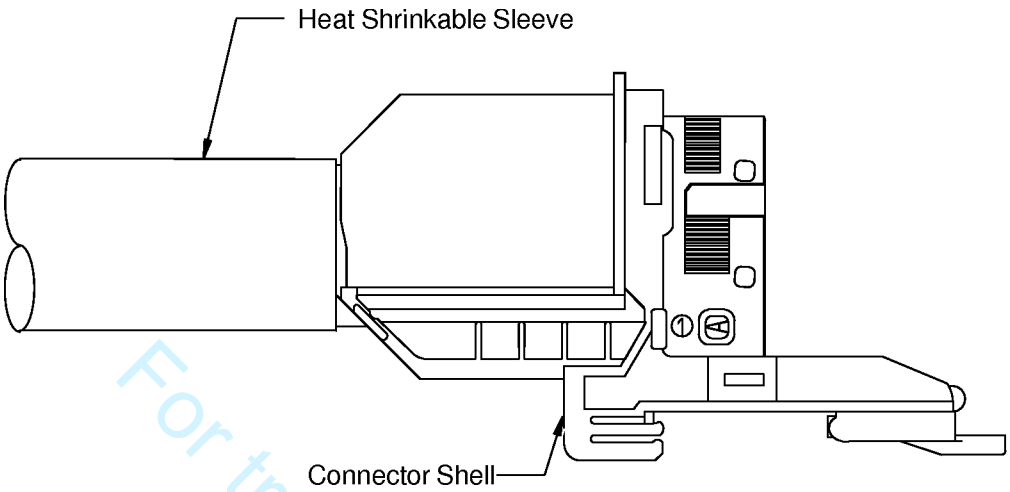

REMOVAL OF THE HEAT SHRINKABLE SLEEVE
Figure 18

(a) If the heat shrinkable sleeve has tie straps or wire harness ties, cut them off.

(b) Carefully make a longitudinal cut in the heat shrinkable sleeve from one end to the other end.

CAUTION: DO NOT CUT INTO THE STRANDS OF THE OVERALL SHIELD OR OTHER COMPONENTS OF THE WIRE HARNESS. DAMAGE TO THE SHIELD OR COMPONENTS CAN OCCUR.

(c) Remove the heat shrinkable sleeve from the wire harness.

(2) Remove the tape at the end of the overall shield. Refer to Figure 19.

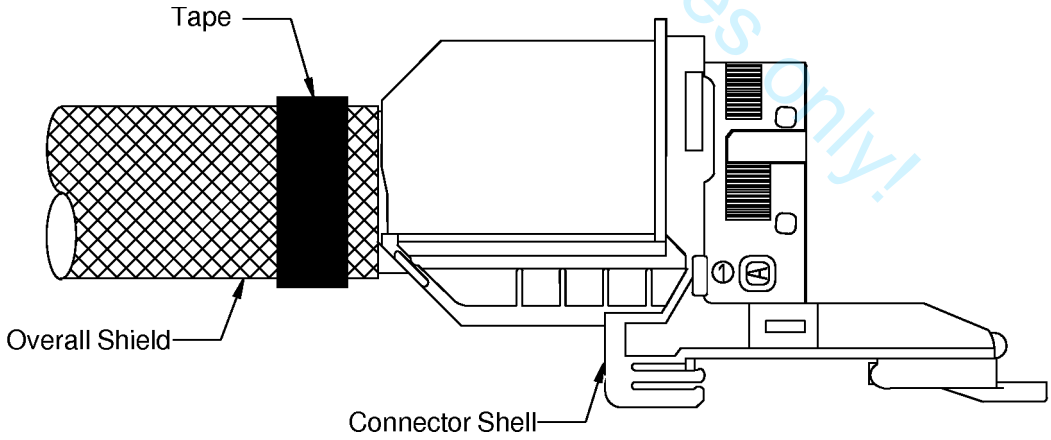

REMOVAL OF THE TAPE
Figure 19

(3) Make a selection of a pair of diagonal cutters from Table 14.

(4) Remove the shield terminator band from the overall shield. Refer to Figure 20.

For training purposes only!

BOEING PROPRIETARY - Copyright © Unpublished Work - See title page for details

ASSEMBLY OF BACC65BJ AND BACC65BK CONNECTORS

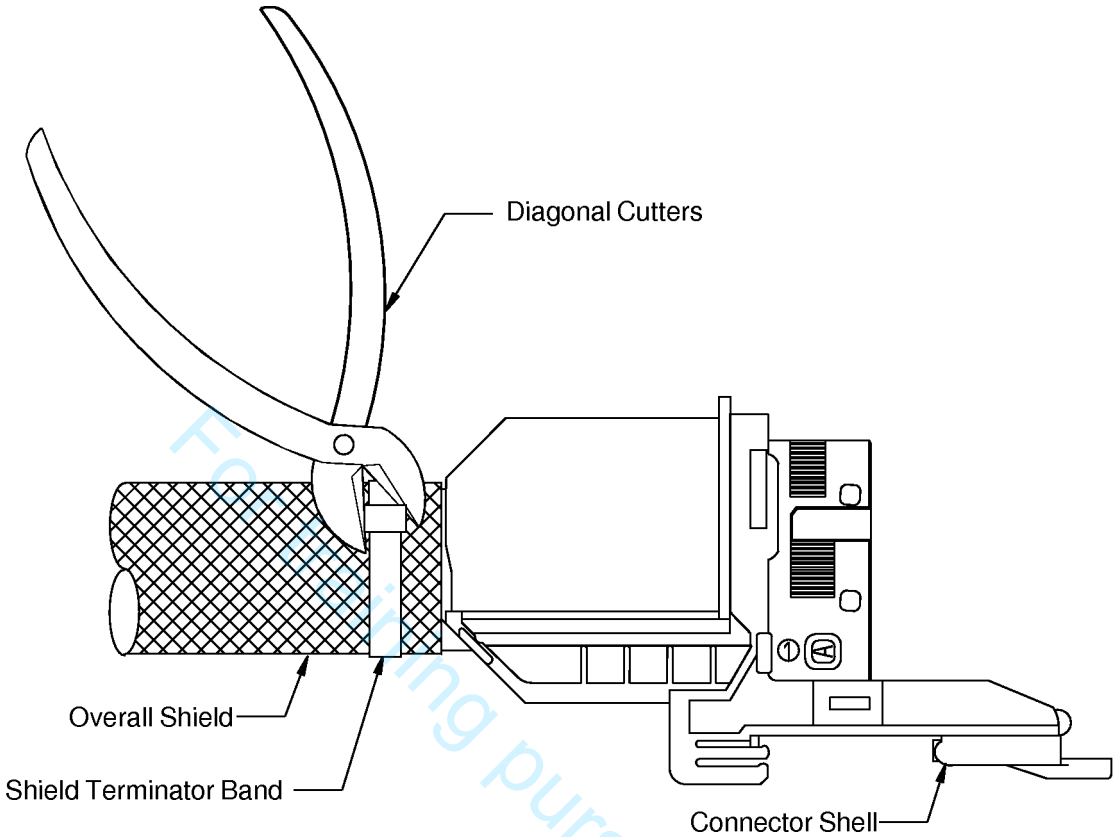

REMOVAL OF THE SHIELD TERMINATOR BAND FROM THE OVERALL SHIELD
Figure 20

(a) Hold the buckle of the shield terminator band with the cutters.

(b) Rotate the cutters and lift the buckle of the band away from the backshell until the buckle releases or the band breaks.

(c) Remove the band.

(5) Push the overall shield away from the band termination platform.

(6) Remove the shield terminator band from the shield ground wires on the band termination platform. Refer to Figure 21.

For training purposes only!

BOEING PROPRIETARY - Copyright © Unpublished Work - See title page for details

ASSEMBLY OF BACC65BJ AND BACC65BK CONNECTORS

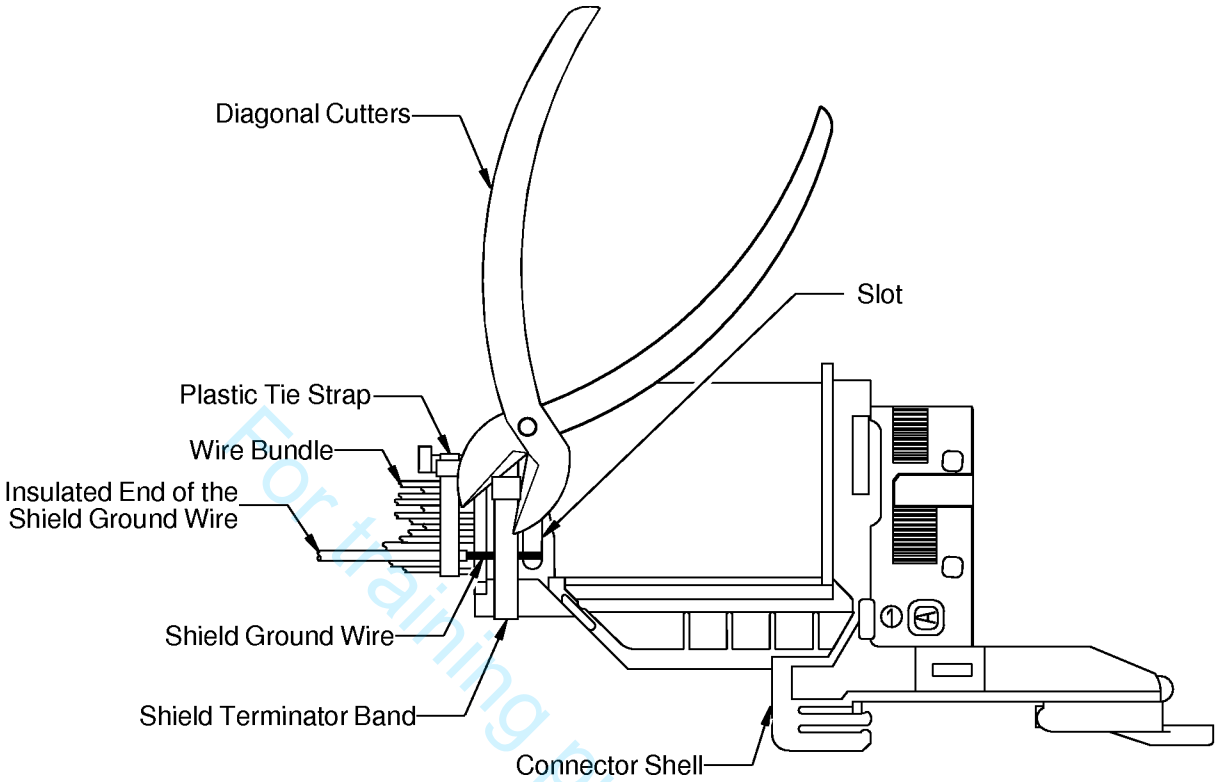

REMOVAL OF THE SHIELD TERMINATOR BAND FROM THE BAND TERMINATION PLATFORM
Figure 21

(a) Hold the buckle of the shield terminator band with the cutters.

(b) Rotate the cutters and lift the buckle of the band away from the backshell until the buckle releases or the band breaks.

(c) Remove the band.

(7) Remove the plastic tie strap. Refer to Figure 21.

(8) If the connector has a shield ground wire that comes out of the slot in the EMI backshell:

(a) Remove the insulation on the shield ground wire. Refer to Figure 21.

(b) Push the EMI Backshell up away from the connector shell.

(c) Push the shield ground wire into the slot.

(d) Pull the shield ground wire out of the EMI backshell.

(e) Do Step (c) and Step (d) for each shield ground wire.

(9) Remove the EMI backshell from the connector shell. Refer to Figure 22.

For training purposes only!

BOEING PROPRIETARY - Copyright © Unpublished Work - See title page for details

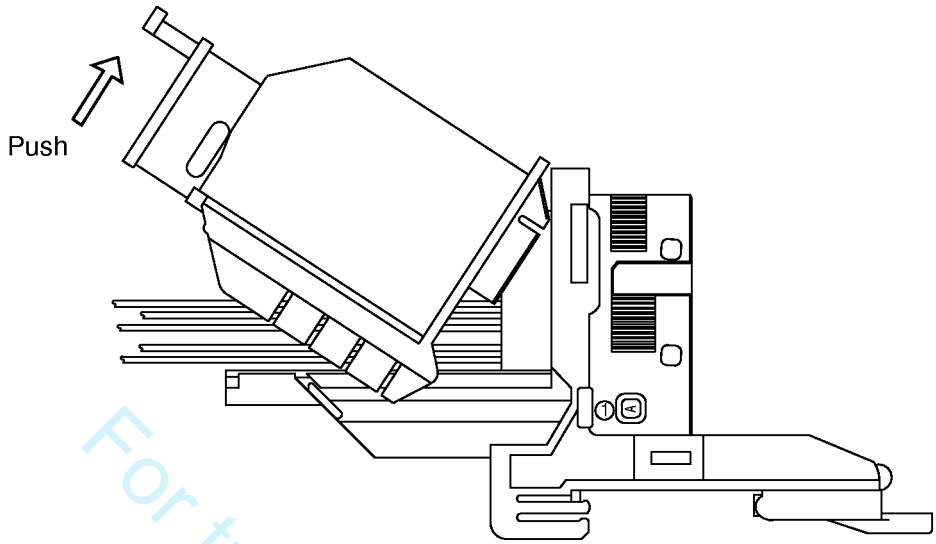

REMOVAL OF THE EMI BACKSHELL FROM THE CONNECTOR SHELL
Figure 22

For training purposes only.

5. CONNECTOR ASSEMBLY

A. Shield Ground Wire Assembly

This paragraph gives the procedure to assemble a shield ground wire and a contact for installation in:

- The connector ground block
- The connector insert.

For the procedure to assemble the shield ground wires for:

- Raychem 55A6160-() cable, refer to Paragraph 5.C.
- BMS13-60 Type 27 Class 1 wire, refer to Paragraph 5.D.
- The termination of the shield at the EMI backshell, refer to Paragraph 5.B.
- Class 3 AWG 10 cable in a BACCI10AL03P Insert, refer to Paragraph 5.E.

(1) Remove 2.5 inches ±0.1 inch of the cable jacket from the end of the cable. Refer to Figure 23.

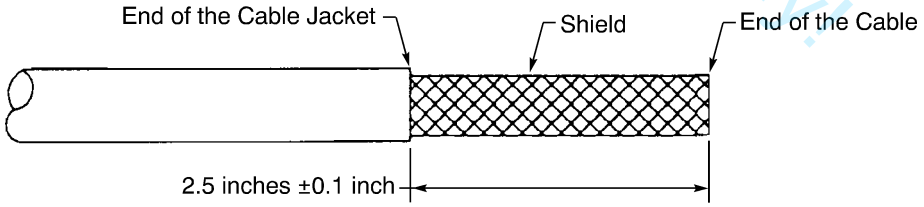

CABLE JACKET REMOVAL
Figure 23

BOEING PROPRIETARY - Copyright © Unpublished Work - See title page for details

(2) Assemble an insulated shield ground wire. Refer to Subject 20-10-15.

NOTE: The shield ground wire must have the same size as the crimp barrel of the applicable contact. Refer to:

- Table 5 for the ground block contact
- Subject 20-74-02 for the insert contact.

Make sure that:

- The shield ground wire assembly components are applicable for the shield material of the wire
- The length of the shield ground wire is 2.5 inches minimum
- The free end of the shield ground wire is pointed forward to the end of the cable.

CAUTION: A SHIELD GROUND WIRE ASSEMBLY WITH A SOLDER SLEEVE IS NOT APPLICABLE FOR A CABLE OR A WIRE WITH A SHIELD THAT HAS NICKEL PLATED CONDUCTORS. UNSATISFACTORY PERFORMANCE OF THE SHIELD TERMINATION CAN OCCUR.

(3) Remove the unwanted length from the end of the shield ground wire and the wires of the cable. Refer to Figure 24.

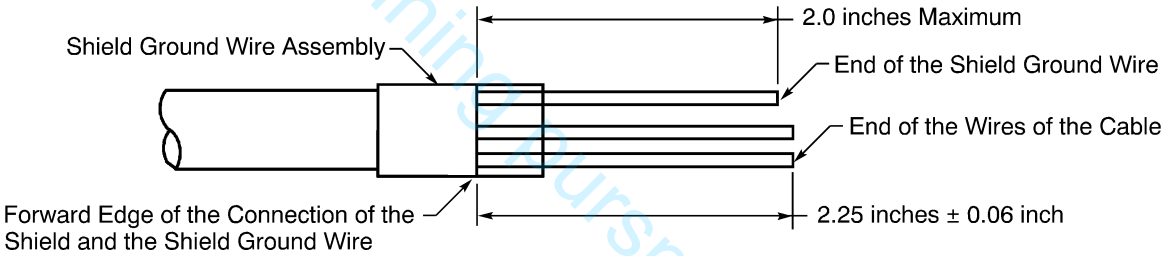

LENGTH OF THE SHIELD GROUND WIRE AND THE WIRES OF THE CABLE
Figure 24

NOTE: The connection of the shield and the shield ground wire can be:

- The melted solder ring of a solder sleeve
- A mechanical ferrule
- An RSK Shield-Kon.

(a) Remove the necessary length from the end of the shield ground wire to make the distance from the forward edge of the connection to the end of the shield ground wire equal to 2.0 inches maximum.

(b) Remove the necessary length from the end of the each wire of the cable to make the distance from the forward edge of the connection to the end of the wire equal to 2.25 inches ±0.06 inch.

(4) Assemble the specified contact on the end of the shield ground wire.

For the procedure to assemble:

- An insert contact, refer to Subject 20-74-02
- A ground block contact, refer to Paragraph 5.G..

B. Shield Ground Wire Assembly for Shield Termination at the EMI Backshell

(1) Remove 2.50 inches ±0.1 inch of the cable jacket from the end of the cable. Refer to Figure 25.

For training purposes only!

BOEING PROPRIETARY - Copyright © Unpublished Work - See title page for details

ASSEMBLY OF BACC65BJ AND BACC65BK CONNECTORS

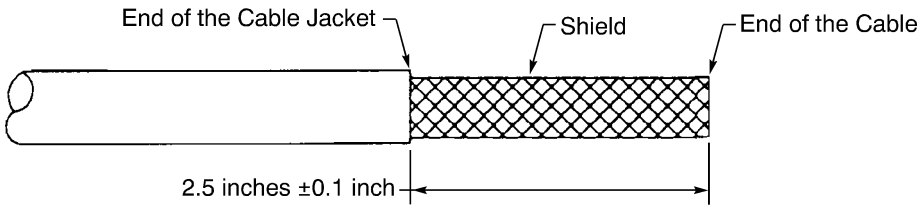

CABLE PREPARATION
Figure 25

(2) Assemble an uninsulated shield ground wire. Refer to Subject 20-10-15 and Figure 26.

Make sure that:

- The size of the shield ground wire is AWG 20
- The length of the shield ground wire is 5 inches minimum
- The shield ground wire is pointed back away from the end of the cable.

CAUTION: A SHIELD GROUND WIRE ASSEMBLY WITH A SOLDER SLEEVE IS NOT APPLICABLE FOR A CABLE OR A WIRE WITH A SHIELD THAT HAS NICKEL PLATED CONDUCTORS. UNSATISFACTORY PERFORMANCE OF THE SHIELD TERMINATION CAN OCCUR.

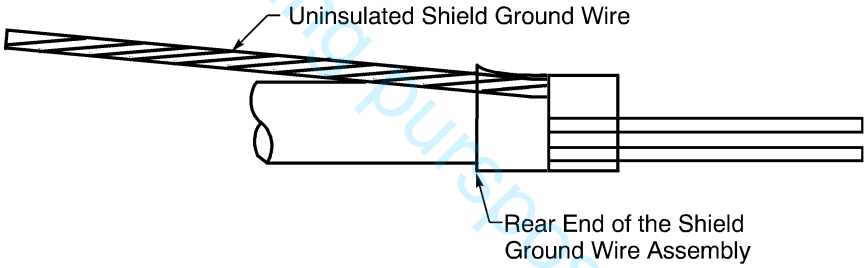

SHIELD GROUND WIRE CONFIGURATION
Figure 26

For training purposes only!

C. Shield Ground Wire Assembly for Raychem 55A6160-() Cable

This paragraph gives the procedure to assemble the shield ground wires and contacts for installation in:

- The connector ground block
- The connector insert.

For the procedure to assemble the shield ground wires for:

- Wire or cable that has one shield, refer to Paragraph 5.A.
- BMS13-60 Type 27 Class 1 wire, refer to Paragraph 5.D.

Table 15
NECESSARY PARTS

Part	Boeing Standard	Shield Ground Wire Size (AWG)
Solder Sleeve with an integral wire	BACS13CT3C	20

BOEING PROPRIETARY - Copyright © Unpublished Work - See title page for details

ASSEMBLY OF BACC65BJ AND BACC65BK CONNECTORS

(1) Make a selection of a solder sleeve with an integral wire from Table 15.

NOTE: Two solder sleeves are necessary.

Refer to Subject 20-10-15 for approved suppliers of Boeing standard solder sleeves.

(2) Prepare the cable for termination of the outer shield. Refer to Figure 27 and Subject 20-00-15.

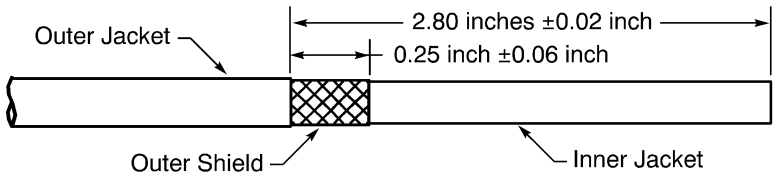

OUTER JACKET AND OUTER SHIELD REMOVAL
Figure 27

(a) Remove 2.80 inches ±0.02 inch of the outer jacket from the end of the cable.

(b) Remove the necessary length of the shield to make the distance from the end of the jacket to the end of the shield equal to 0.25 inch ±0.06 inch.

(3) Assemble the shield ground wire of the outer shield. Refer to Figure 28.

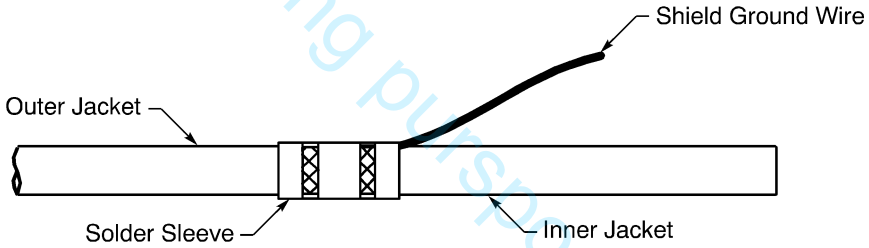

TERMINATION OF THE OUTER SHIELD
Figure 28

(a) Put the solder sleeve on the wire or cable.

Make sure that:

- The free end of the shield ground wire is pointed forward to the end of the cable
- The large end of the solder sleeve is put on the wire or cable first
- The inner edge of the rear seal ring is aligned with the end of the outer jacket.

(b) Shrink the solder sleeve into its position.

Make sure that:

- The solder sleeve stays in the correct position
- A minimum of 75 percent of the indicator ring on top of the solder ring is melted.

(c) Remove the necessary length of the shield ground wire to make the distance from the forward edge of the solder ring to the end of the wire equal to 2.0 inches maximum.

(4) Prepare the cable for termination of the inner shield. Refer to Figure 29 and Subject 20-00-15.

For training purposes only!

BOEING PROPRIETARY - Copyright © Unpublished Work - See title page for details

ASSEMBLY OF BACC65BJ AND BACC65BK CONNECTORS

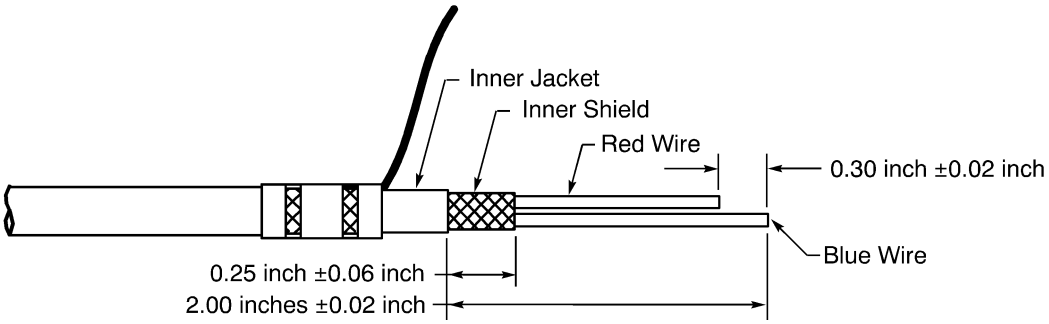

INNER JACKET AND INNER SHIELD REMOVAL
Figure 29

(a) Remove 2.00 inches ±0.02 inch of the inner jacket from the end of the cable.

(b) Remove the necessary length of the inner shield to make the distance from the end of the shield to the end of the jacket equal to 0.25 inch ±0.06 inch.

(c) Remove the necessary length of the red wire to make the distance from the end of the red wire to the end of the blue wire equal to 0.30 inch ±0.02 inch.

(d) Remove 0.21 inch ±0.02 inch of insulation from the end of the blue wire. Refer to Subject 20-00-15.

(5) Assemble the shield ground wire of the inner shield. Refer to Figure 30.

Make sure that:

- The free end of the shield ground wire is pointed forward to the end of the cable
- The large end of the solder sleeve is put on the wire or cable first
- The inner edge of the rear seal ring is aligned with the end of the jacket.

For training purposes only!

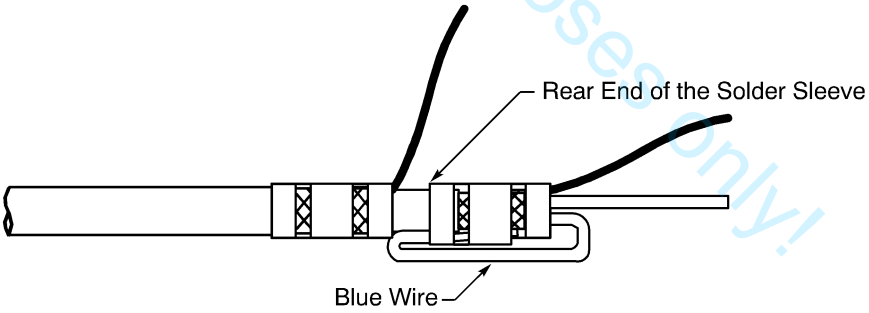

TERMINATION OF THE INNER SHIELD
Figure 30

(a) Fold the blue wire back and put the end of the wire between the inner shield and the rear end of the solder sleeve.

Make sure the center of the conductor is aligned with the solder ring of the solder sleeve.

CAUTION: THE STRANDS OF THE WIRE MUST NOT GO INTO THE SHIELD OF THE CABLE. A SHORT CIRCUIT BETWEEN THE CONDUCTOR OF THE WIRE CAN OCCUR.

(b) Shrink the solder sleeve into its position.

BOEING PROPRIETARY - Copyright © Unpublished Work - See title page for details

Make sure that:

- The solder sleeve stays in the correct position
- A minimum of 75 percent of the indicator ring on top of the solder ring is melted.

(c) Remove the necessary length of the shield ground wire to make the distance from the forward edge of the solder ring to the end of the wire equal to 2.0 inches maximum.

(6) Assemble the specified contact on the end of the shield ground wire.

For the assembly of:

- A ground block contact, refer to Paragraph 5.G.
- An insert contact, refer to Subject 20-74-02

D. Shield Ground Wire Assembly for BMS13-60 Type 27 Class 1 Wire

This paragraph gives the procedure to assemble shield ground wires and contacts for installation in:

- The connector ground block
- The connector insert.

For the procedure to assemble the shield ground wires for:

- Wire or cable that has one shield, refer to Paragraph 5.A.
- Raychem 55A6160-() cable, refer to Paragraph 5.C.

Table 16
MECHANICAL FERRULE PART NUMBERS

Shield	Ferrule Type	Boeing Standard
Inner	Inner	BACS13S071BNP
	Outer	BACS13S149CNP
Outer	Inner	BACS13S090BNP
	Outer	BACS13S175CNP

NOTE: Refer to the D-590 Boeing to Vendor Cross Reference Index for the supplier part numbers for the BACS13S ferrules.

Table 17
NECESSARY MATERIALS

Material	Part Number	Supplier
Sleeve, Heat Shrinkable	SAE-AMS-DTL-23053/12 Class 2	QPL
	SAE-AMS-DTL-23053/12 Class 5	QPL
	TFE-2X	Zeus
	TFE-4X	Zeus

(1) Prepare the cable for the termination of the outer shield. Refer to Figure 31 and Subject 20-00-15.

For training purposes only!

BOEING PROPRIETARY - Copyright © Unpublished Work - See title page for details

ASSEMBLY OF BACC65BJ AND BACC65BK CONNECTORS

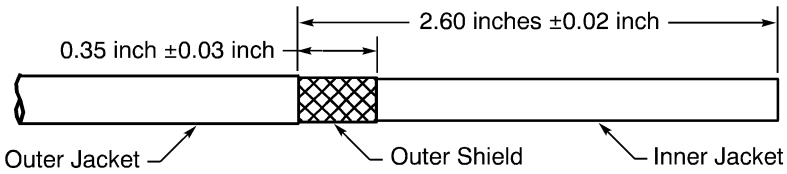

OUTER JACKET AND OUTER SHIELD REMOVAL
Figure 31

(a) Remove 2.60 inches ±0.02 inch of the outer jacket from the end of the cable.

(b) Remove the necessary length of the outer shield to make the distance from the end of the jacket to the end of the shield equal to 0.35 inch ±0.03 inch.

(2) Assemble the shield ground wire of the outer shield. Refer to Figure 32.

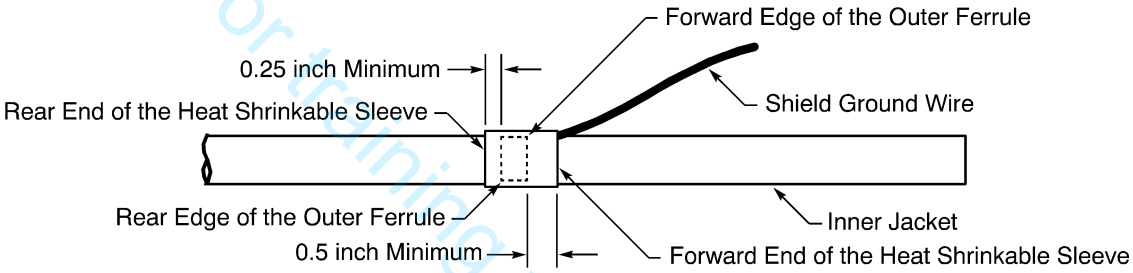

TERMINATION OF THE OUTER SHIELD
Figure 32

(a) Make a selection of an inner and outer ferrule from Table 16.

(b) Make a selection of a ferrule crimp tool. Refer to Subject 20-10-15.

(c) Make a selection of a heat shrinkable sleeve from Table 17.

Make sure that the heat shrinkable sleeve has the smallest diameter that can move freely on the shield ground wire assembly.

NOTE: For alternative heat shrinkable sleeves, refer to Subject 20-00-11.

(d) Make a selection of a shield ground wire. Refer to Subject 20-10-15.

NOTE: The shield ground wire must have the same size as the crimp barrel of the specified contact. Refer to Table 5 for the ground block contact.

(e) Put the outer ferrule on the cable.

(f) Put the inner ferrule on the cable.

Make sure that:

- The inner ferrule is between the shield and the inner jacket
- The rear end of the inner ferrule is tight against the end of the outer jacket.

(g) Remove the necessary length of insulation from one end of the shield ground wire. Refer to Subject 20-00-15.

Make sure that the bare conductor can extend a small amount farther than the length of the outer ferrule.

(h) Put the conductor of the shield ground wire between the shield and the outer ferrule.

BOEING PROPRIETARY - Copyright © Unpublished Work - See title page for details
For training purposes only!

Make sure that:

- The free end of the shield ground wire is pointed forward to the end of the wire
- The bare conductor extends a small amount farther than the rear end of the outer ferrule.

(i) Push the outer ferrule and the shield ground wire forward until the center of the outer ferrule is aligned with the center of the inner ferrule.

(j) Make sure that the forward end of the inner ferrule does not extend farther than 0.06 inch from the forward end of the outer ferrule.

(k) Crimp the outer ferrule.

(l) Remove the unwanted length of the shield that extends farther than the forward edge of the outer ferrule.

NOTE: The outer surface of the inner ferrule can be used to cut against.

(m) Remove the necessary length from the end of the shield ground wire to make the distance from the forward edge of the outer ferrule to the end of the wire equal to 2.0 inches maximum.

(n) Put the necessary length of heat shrinkable sleeve on the wire or cable.

Make sure that the distance:

- From the rear end of the ferrule to the rear end of the sleeve is 0.25 inch minimum
- From the forward end of the ferrule to the forward end of the sleeve is 0.5 inch minimum.

(o) Shrink the sleeve into its position. Refer to Subject 20-10-14.

(3) Prepare the cable for the termination of the inner shield. Refer to Figure 33 and Subject 20-00-15.

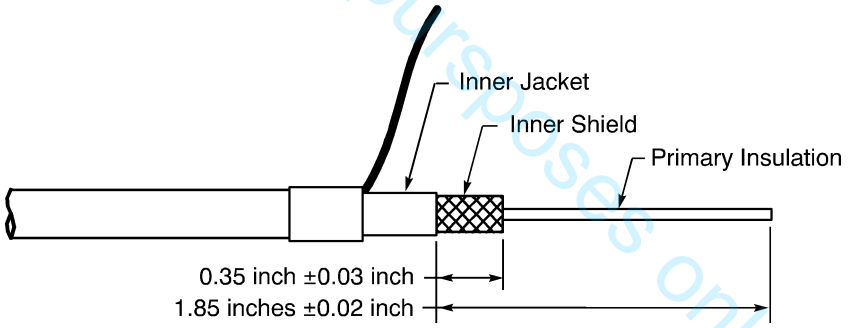

INNER JACKET AND INNER SHIELD REMOVAL
Figure 33

(a) Remove 1.85 inches ±0.02 inch of the inner jacket from the end of the cable.

(b) Remove the necessary length of the inner shield to make the distance from the end of the jacket to the end of the shield equal to 0.35 inch ±0.03 inch.

(4) Assemble the shield ground wire of the inner shield. Refer to Figure 34.

For training purposes only!

BOEING PROPRIETARY - Copyright © Unpublished Work - See title page for details

ASSEMBLY OF BACC65BJ AND BACC65BK CONNECTORS

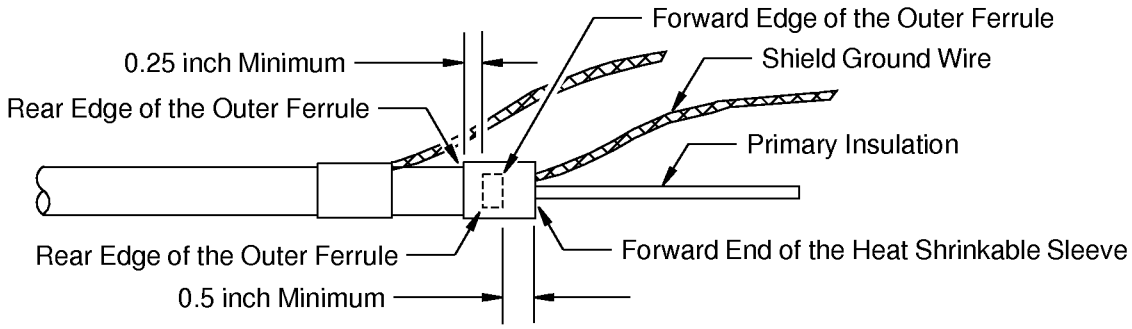

TERMINATION OF THE INNER SHIELD
Figure 34

For training purposes only!

(a) Make a selection of an inner and outer ferrule from Table 16.

(b) Make a selection of a ferrule crimp tool. Refer to Subject 20-10-15.

(c) Make a selection of a heat shrinkable sleeve from Table 17.

Make sure that the heat shrinkable sleeve has the smallest diameter that can move freely on the shield ground wire assembly.

NOTE: For alternative heat shrinkable sleeves, refer to Subject 20-00-11.

(d) Make a selection of a shield ground wire. Refer to Subject 20-10-15.

NOTE: The shield ground wire must have the same size as the crimp barrel of the specified contact. Refer to Subject 20-74-02 for the insert contact.

(e) Put the outer ferrule on the cable.

(f) Put the inner ferrule on the cable.

Make sure that:

- The inner ferrule is between the shield and the primary insulation
- The rear end of the inner ferrule is tight against the end of the inner jacket.

(g) Remove the necessary length of insulation from one end of the shield ground wire. Refer to Subject 20-00-15.

Make sure that the bare conductor can extend a small amount farther than the length of the outer ferrule.

(h) Put the conductor of the shield ground wire between the shield and the outer ferrule.

Make sure that:

- The free end of the shield ground wire is pointed forward to the end of the wire
- The bare conductor extends a small amount farther than the rear end of the outer ferrule.

(i) Push the outer ferrule and the shield ground wire forward until the center of the outer ferrule is aligned with the center of the inner ferrule.

(j) Make sure that the forward end of the inner ferrule does not extend farther than 0.06 inch from the forward end of the outer ferrule.

(k) Crimp the outer ferrule.

BOEING PROPRIETARY - Copyright © Unpublished Work - See title page for details

(l) Remove the unwanted length of the shield that extends farther than the forward edge of the outer ferrule.

NOTE: The outer surface of the inner ferrule can be used to cut against.

(m) Remove the necessary length from the end of the shield ground wire to make the distance from the forward edge of the outer ferrule to the end of the wire equal to 2.0 inches maximum.

(n) Put the necessary length of heat shrinkable sleeve on the wire or cable.

Make sure that the distance:

- From the rear end of the ferrule to the rear end of the sleeve is 0.25 inch minimum
- From the forward end of the ferrule to the forward end of the sleeve is 0.5 inch minimum.

(o) Shrink the sleeve into its position. Refer to Subject 20-10-14.

(5) Assemble the specified contact on the end of the shield ground wire.

For the assembly of:

- A ground block contact, refer to Paragraph 5.G.
- An insert contact, refer to Subject 20-74-02.

E. Shield Ground Wire Assembly for Class 3 AWG 10 Cable in a BACI10AL03P Insert

This paragraph gives the procedure to assemble shield ground wires and contacts for installation in:

- The connector ground block
- The connector insert.

For the procedure to assemble the shield ground wires for:

- Wire or cable that has one shield, refer to Paragraph 5.A.
- Shield termination at the EMI backshell, refer to Paragraph 5.B.
- Raychem 55A6160-() cable, refer to Paragraph 5.C.
- BMS13-60 type 27 class 1 wire, refer to Paragraph 5.E.

Table 18
CABLE JACKET REMOVAL LENGTH

Solder Sleeve	Removal Length L (inch)	
	Target	Tolerance
BACS13CT	3.75	±0.06
BACS13DG	3.75	±0.06
D-104	3.85	±0.06
D-108	3.92	±0.06

(1) Remove the necessary length of the jacket from the end of the cable.

Refer to:

- Table 18
- Figure 35.

For training purposes only!

BOEING PROPRIETARY - Copyright © Unpublished Work - See title page for details

ASSEMBLY OF BACC65BJ AND BACC65BK CONNECTORS

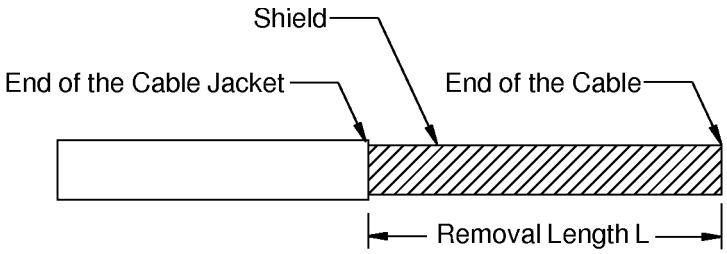

CABLE JACKET REMOVAL
Figure 35

(2) Assemble the shield termination. Refer to Figure 36.

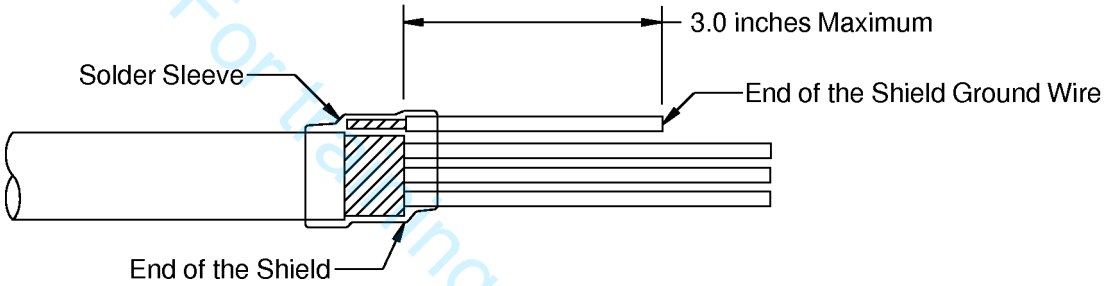

SOLDER SLEEVE SHIELD GROUND WIRE
Figure 36

(a) Assemble the solder sleeve shield ground wire at the end of the cable jacket.
Make sure that the shield ground wire is pointed forward toward the end of the cable.

(b) Remove the necessary length from the end of the shield ground wire to make the distance from the end of the shield to the end of the shield ground wire equal to 3.0 inches.

(3) Remove the necessary length from the end of the wires of the cable.

Refer to:

- Figure 37
- Figure 38
- Figure 39.

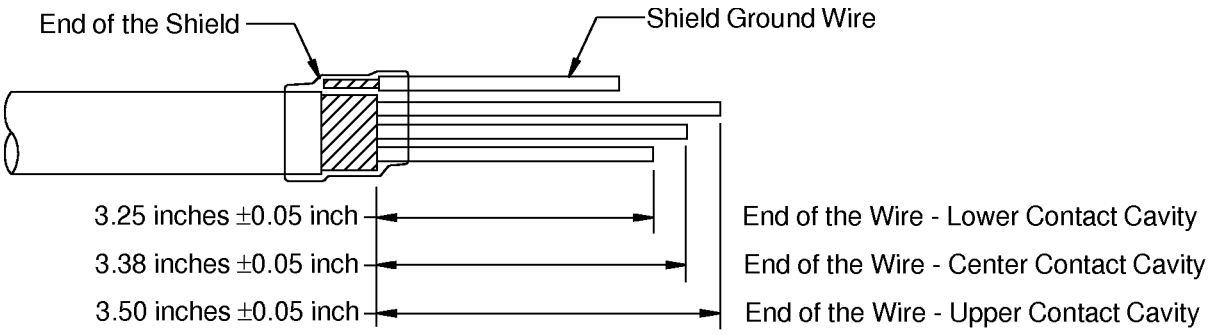

LENGTH OF THE WIRES OF THE CABLE
Figure 37

For training purposes only!

BOEING PROPRIETARY - Copyright © Unpublished Work - See title page for details

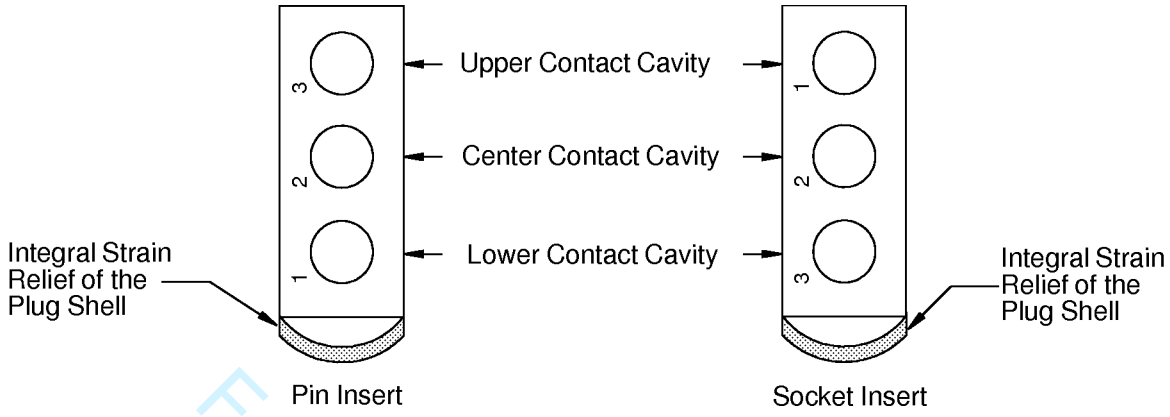

POSITION OF THE CONTACT CAVITIES FOR THE PLUG SHELL
Figure 38

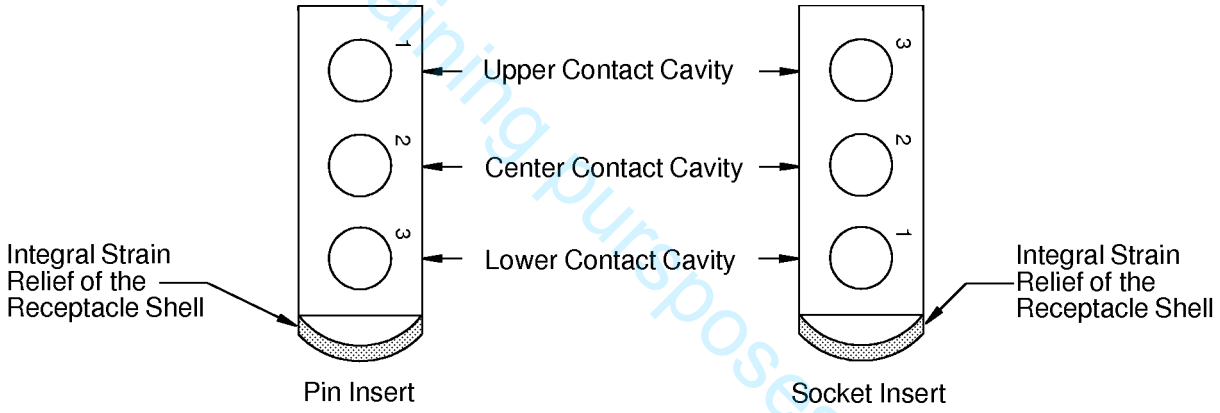

POSITION OF THE CONTACT CAVITIES FOR THE RECEPTACLE SHELL
Figure 39

For training purposes only.

(a) Remove the necessary length from the end of the wire for the center contact cavity to make the distance from the end of the shield to the end of the wire equal to 3.38 inches ±0.05 inch.

(b) Remove the necessary length from the end of the wire for the lower contact cavity to make the distance from the end of the shield to the end of the wire equal to 3.25 inches ±0.05 inch.

F. Contact Assembly

For the procedure to assemble:

- Insert contacts, refer to Subject 20-74-02
- Ground block contacts, refer to Paragraph 5.G..

BOEING PROPRIETARY - Copyright © Unpublished Work - See title page for details

G. Ground Block Contact Assembly

Table 19
GROUND BLOCK CONTACT CRIMP TOOLS

Contact			Wire Size (AWG)	Crimp Tool			
				Basic Unit		Locator	
Engaging End Size	Crimp Barrel Size	Size		Part Number	Setting	Part Number	Color
16	18	1618	18	M22520/1-01	4	M22520/1-02	Red
				M22520/2-01	7	M22520/2-11	-
				WA22	7	M22520/2-11	-
				WA22LC	7	M22520/2-11	-
				WA27F	4	M22520/1-02	Red
	20	1620	20	M22520/1-01	5	M22520/1-02	Red
				WA27F	5	M22520/1-02	Red

(1) Make a selection of a crimp tool from Table 19.

(2) Remove 0.18 inch ± 0.02 inch of insulation from the end of the shield ground wire.

Refer to:

- Figure 40
- Subject 20-00-15 for the insulation removal procedures.

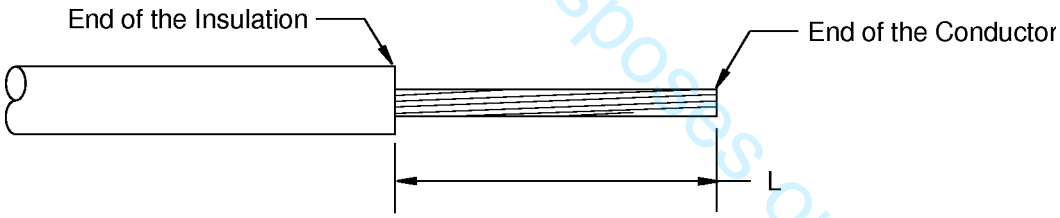

INSULATION REMOVAL LENGTH
Figure 40

(3) Put the end of the wire in the crimp barrel of the contact. Refer to Figure 41.

Make sure that:

- All of the strands of the conductor are in the crimp barrel
- The conductor can be seen in the inspection hole
- The distance from the end of the insulation to the end of the crimp barrel is not more than 0.03 inch.

For training purposes only!

BOEING PROPRIETARY - Copyright © Unpublished Work - See title page for details

ASSEMBLY OF BACC65BJ AND BACC65BK CONNECTORS

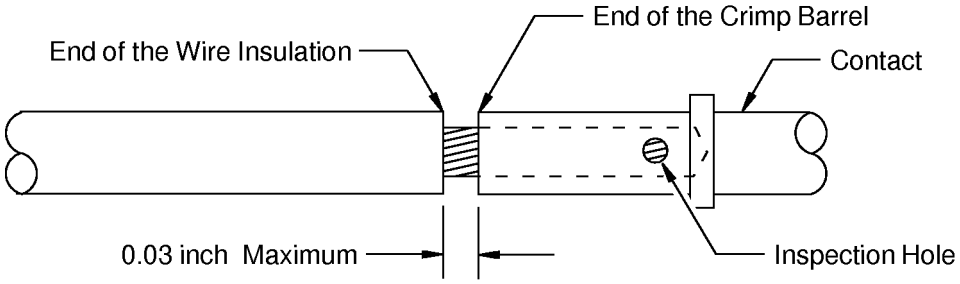

POSITION OF THE WIRE IN THE CRIMP BARREL OF THE CONTACT
Figure 41

(4) Crimp the contact.

Make sure that:

- All of the strands of the conductor are in the crimp barrel
- The conductor can be seen in the inspection hole
- The distance from the end of the insulation to the end of the crimp barrel is not more than 0.03 inch.

H. Size 5 Coax Contact Assembly

Refer to Subject 20-74-02.

I. Assembly of Size 5 Power Contacts

Refer to Subject 20-74-02.

J. Assembly of Size 8 Coax Contacts

Refer to Subject 20-74-02.

K. Size 8 Twinax Contact Assembly

Refer to Subject 20-74-02.

L. Insertion of Size 8 Coax and Size 8 Twinax Contacts

Refer to Subject 20-74-02.

M. Size 8 Quadrax Contact Assembly

Refer to Subject 20-74-02.

N. Contact Insertion

This paragraph gives the procedure to install ground block contacts. For the procedure to install insert contacts, refer to Subject 20-74-02.

NOTE: Insert contacts can be installed in the insert before or after the insert is installed in the connector shell.

If a cable clamp is specified, it must be installed before:

- An insert with assembled contacts is installed in the connector shell
- Assembled ground block contacts are installed in the ground block.

For training purposes only!

BOEING PROPRIETARY - Copyright © Unpublished Work - See title page for details

Table 20
GROUND BLOCK CONTACT INSERTION TOOLS

Engaging End Size	Insertion Tool	
	Part Number	Color
16	DAK83-20	-
	M81969/14-11	Red
	ST2220-2-28	-

(1) Make a selection of the contact insertion tool from Table 20 for the ground block contacts.

(2) Put the contact assembly in the insertion tool.

(3) Axially align the insertion tool and the contact cavity.

(4) Carefully push the insertion tool and the contact straight into the contact cavity until it stops.

For the ground block contacts, make sure that tension does not occur between the shield ground wire and:

- The solder sleeve
- The contact crimp barrel.

(5) Carefully pull the insertion tool straight out of the contact cavity.

(6) Remove the insertion tool from the wire.

(7) Lightly pull the wire to make sure that the contact is locked in the contact cavity.

CAUTION: DO NOT PULL THE WIRE WITH A STRONG OR A SUDDEN FORCE. THE FORCE CAN CAUSE DAMAGE TO THE CONNECTOR OR THE CONTACT.

CAUTION: DO NOT MAKE A DENT IN THE WIRE INSULATION WITH THE FINGERNAILS. DAMAGE TO THE WIRE INSULATION CAN CAUSE UNSATISFACTORY PERFORMANCE OF THE WIRE.

(8) If the contact is not locked in the contact cavity:

(a) Pull the contact assembly from the contact cavity.

(b) Do Step (2) through Step (7) again.

O. Insertion of Fiber Optic Contact Termini

Refer to Subject 20-74-02.

P. Size 5 Coax Contact Insertion

Refer to Subject 20-74-02.

Q. Installation of Size 8 Quadrax Contacts

Refer to Subject 20-74-02.

R. Seal of an Empty Contact Cavity

Refer to Subject 20-74-02.

S. Insert Installation

NOTE: An insert can be installed with contacts or without contacts.

For training purposes only!

BOEING PROPRIETARY - Copyright © Unpublished Work - See title page for details

ASSEMBLY OF BACC65BJ AND BACC65BK CONNECTORS

The connector shells for the BACC65BJ( ) and BACC65BK( ) connector:

- Will only accept inserts that have "A" polarization
- Will not accept inserts that have "B" polarization.

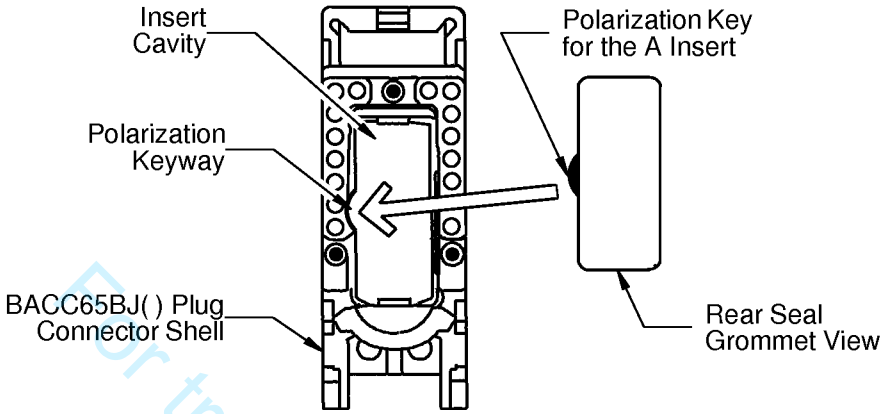

BACC65BJ( ) PLUG CONNECTOR INSERT INSTALLATION
Figure 42

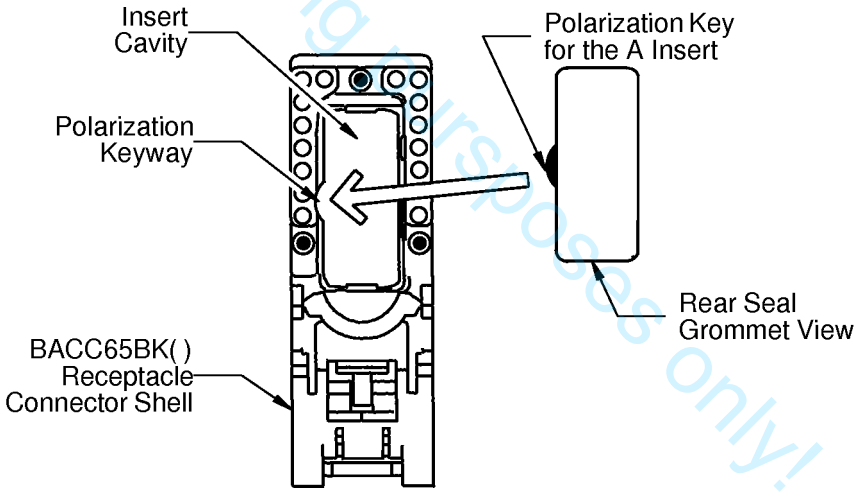

BACC65BK( ) RECEPTACLE CONNECTOR INSERT INSTALLATION
Figure 43

(1) Align the polarization key on the insert with the polarization keyway on the rear side of the insert cavity. Refer to Figure 42 and Figure 43.

NOTE: A blank insert does not have a polarization key.

(2) Push the insert into the insert cavity until it stops and is locked in position.

CAUTION: IF THE INSERT DOES NOT GO INTO THE CONNECTOR SHELL EASILY, DO NOT CONTINUE TO PUSH THE INSERT. DAMAGE TO THE INSERT CAN OCCUR.

(3) If the insert does not go into the connector shell correctly:

For training purposes only!

BOEING PROPRIETARY - Copyright © Unpublished Work - See title page for details

(a) Remove the insert. Refer to Paragraph 4.D.

(b) Do Step (1) and Step (2) again.

T. Integral Strain Relief Assembly

(1) If the wire harness has a fiber optic cable, put the necessary layers of support tape on the wire harness. Refer to Figure 44.

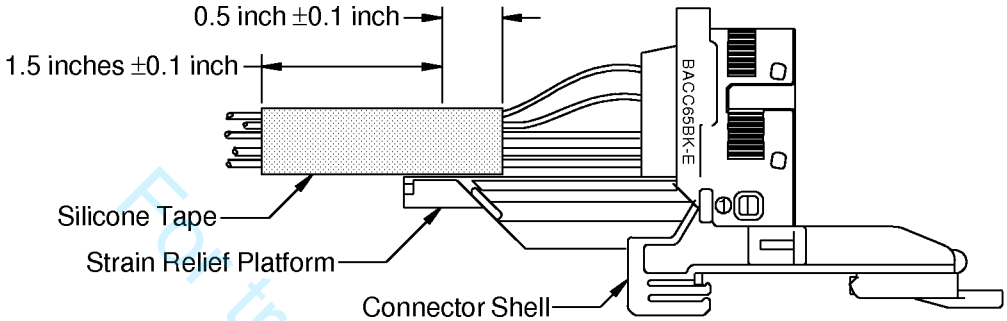

POSITION OF THE LAYERS OF SUPPORT TAPE ON THE WIRE HARNESS
Figure 44

(a) Put a layer of Type II silicone tape on the wire harness.

Make sure that the layer of tape:

- Starts 0.5 inch ± 0.1 inch forward from the center of the tie area
- Ends 1.5 inches ± 0.1 inch rearward from the center of the tie area
- Makes a 50 percent overlap.

(b) Put a second layer of Type II silicone tape on the wire harness.

Make sure that the layer of tape:

- Starts 1.5 inches ± 0.1 inch rearward from the center of the tie area
- Ends 0.5 inch ± 0.1 inch forward from the center of the tie area
- Makes a 50 percent overlap.

(2) If the wire harness has one or more solder sleeve solder joints on the strain relief platform, carefully push the wire harness forward toward the connector until the solder sleeve solder joints are out of the strain relief platform.

Make sure that:

- The grommet is not put out of its shape
- The bend radius of the wires is less than the minimum bend radius.

(3) Wind a minimum of three layers of Type I silicone tape on the length of the wire harness that is adjacent to the strain relief platform. Refer to Figure 45.

For training purposes only!

BOEING PROPRIETARY - Copyright © Unpublished Work - See title page for details

ASSEMBLY OF BACC65BJ AND BACC65BK CONNECTORS

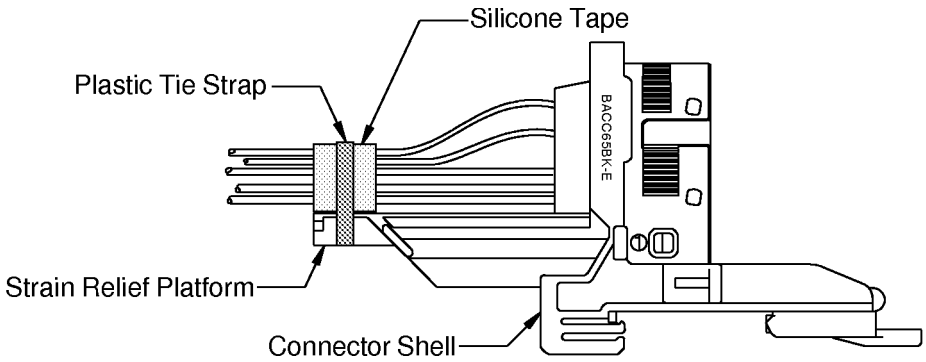

POSITION OF THE LAYERS OF TAPE ON THE WIRE HARNESS
Figure 45

(4) Assemble a plastic wire harness tie on the wire harness and the strain relief platform. Refer to Figure 45.

Make sure that:

- The wire harness tie is not put on solder sleeve solder joints
- The wire harness has a tight fit in the tie.

U. Installation of the Fiber Optic Alignment Sleeve Insert

Refer to Subject .20-74-02.

V. Installation of the BACC10MR( ) EMI Backshells

NOTE: The backshell is installed after:

- The contact assemblies are installed in the insert
- The insert is installed in the connector shell.

Table 21
NECESSARY MATERIALS

Part Number	Description	Supplier
Scotch 70	Type 1 Silicone Tape, Self Bonding Silicone Rubber, High Temperature, 0.012 inch thick, 0.25 inch wide	3M
912-10X12	Type 1 Silicone Tape, Self Bonding Silicone Rubber, High Temperature, 0.012 inch thick, 0.25 inch wide	Arlon

(1) Wind a minimum of 2 layers of Type I silicone tape around the wire harness at the location that is adjacent to the strain relief tab. Refer to Table 21.

Make sure that a shield ground wire is not between the wire harness and the layer of tape.

(2) Put the shield ground wires against the wires and cables of the harness.

Make sure that the shield ground wires are:

- Parallel to the wire harness
- On the layers of the tape.

(3) Align the backshell and the connector. Refer to Figure 46.

For training purposes only!

BOEING PROPRIETARY - Copyright © Unpublished Work - See title page for details

ASSEMBLY OF BACC65BJ AND BACC65BK CONNECTORS

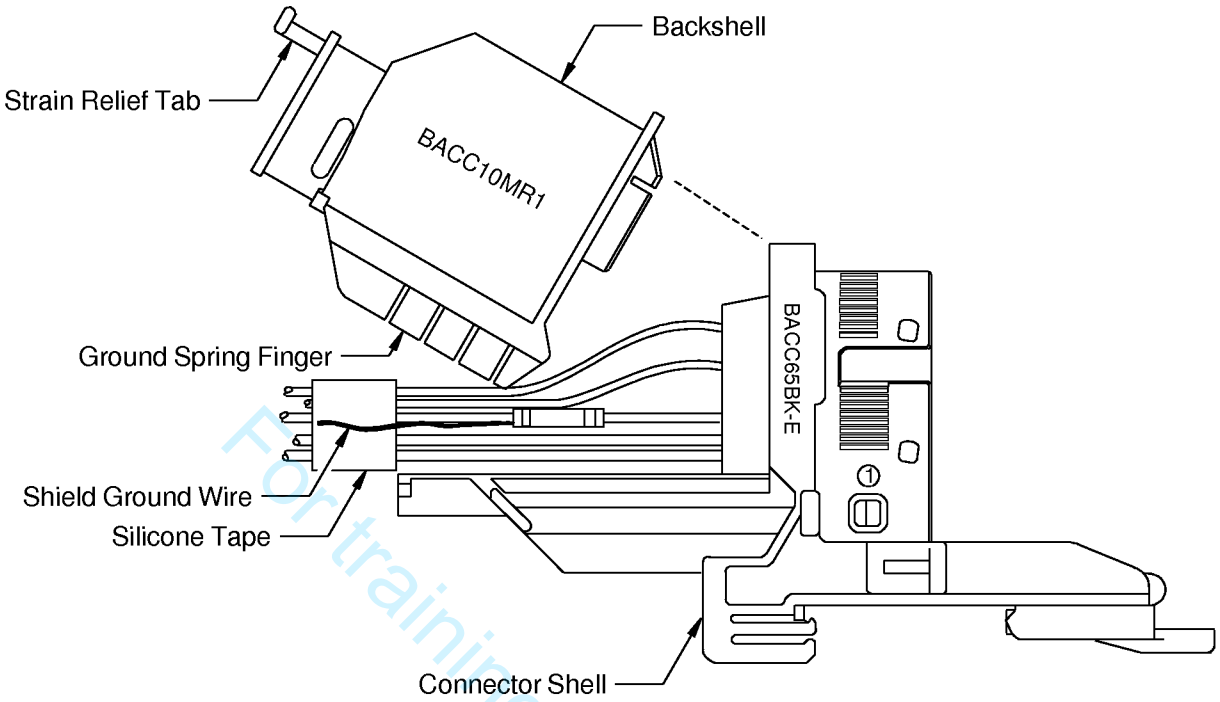

ALIGNMENT OF THE BACKSHELL AND THE CONNECTOR
Figure 46

(4) Put the forward end of the backshell against the rear end of the connector shell. Refer to Figure 47. Make sure that the EMI spring fingers on the bottom of the backshell are aligned with the integral strain relief of the connector shell.

For training purposes only!

BOEING PROPRIETARY - Copyright © Unpublished Work - See title page for details

ASSEMBLY OF BACC65BJ AND BACC65BK CONNECTORS

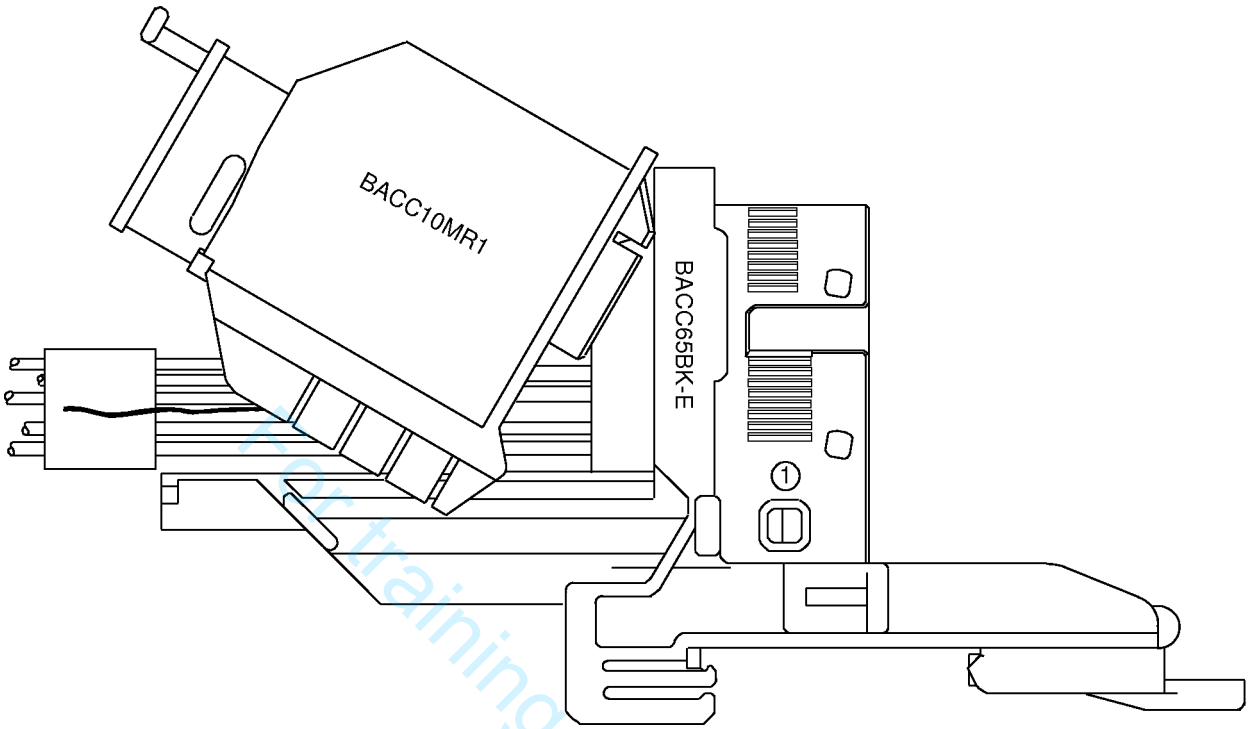

POSITION OF THE BACKSHELL AGAINST THE CONNECTOR SHELL
Figure 47

(5) Push the backshell toward the wire harness and the connector until the EMI spring fingers are fully engaged with the integral strain relief of the connector shell.

W. Shield Ground Wire Termination

Table 22
NECESSARY TOOLS

Description	Part Number	Supplier
Manual Band Installation Tool	600-061	Glenair
	A30199	Band-It Idex

Table 23
NECESSARY MATERIALS

Description	Part Number	Specification	Supplier
Band, Shield Termination	BACB42F( )	-	Refer to Subject 20-00-11
Plastic Tie Strap	BACS38W2	-	Panduit
Type 1 Silicone Tape, Self Bonding Silicone Rubber, High Temperature, 0.012 inch thick, 0.25 inch wide	-	A-A-59163, Type I	Refer to Subject 20-00-11
PTFE Tape	-	A-A-59474	Refer to Subject 20-00-11

For training purposes only!

BOEING PROPRIETARY - Copyright © Unpublished Work - See title page for details

ASSEMBLY OF BACC65BJ AND BACC65BK CONNECTORS

(1) Put the shield ground wires in the slot of the backshell. Refer to Figure 48.

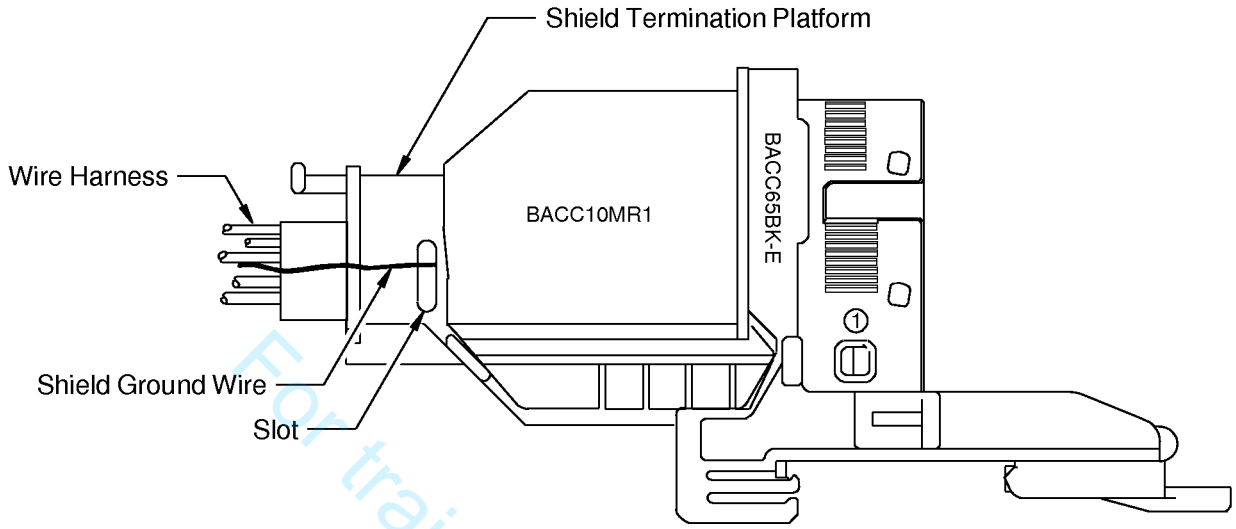

POSITION OF THE SHIELD GROUND WIRES ON THE SHIELD TERMINATION PLATFORM
Figure 48

(2) If the wire harness has a guard wire, put the end of the shield ground wire through the cable exit and through the slot in the shield termination platform. Refer Figure 49.

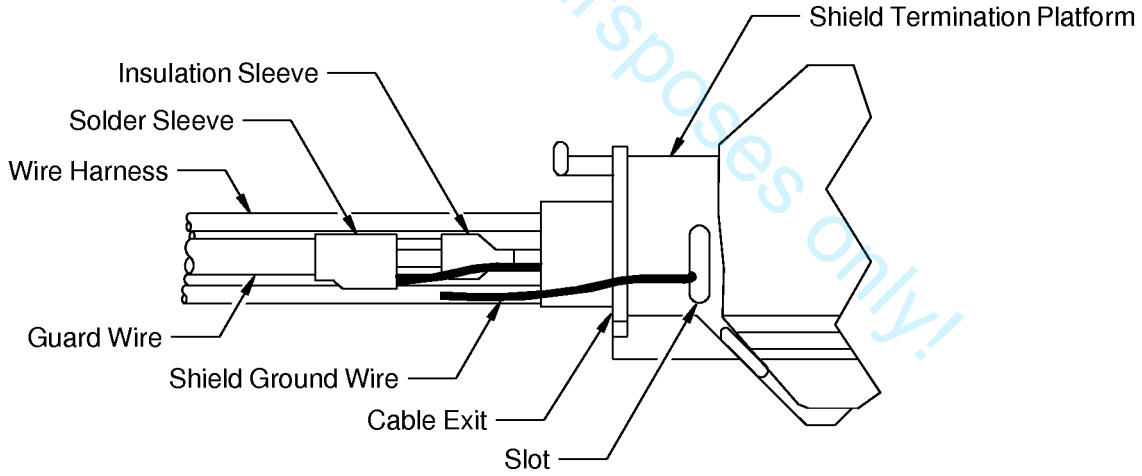

POSITION OF THE GUARD WIRE SHIELD GROUND WIRE IN THE SLOT
Figure 49

(3) Carefully pull the loose end of each shield ground wire.
Make sure that the shield ground wires do not have too much tension.

(4) Put the shield ground wires evenly around the shield termination platform. Refer to Figure 48.

For training purposes only!

BOEING PROPRIETARY - Copyright © Unpublished Work - See title page for details

Make sure that each shield ground wire:

- Does not make an overlap with a different shield ground wire on the platform
- Does not have too much slack.

(5) Make a selection of a band installation tool from Table 22.

(6) Make a selection of a shield termination band from Table 23.

(7) If the shield terminator band is flat, make the band into a coil around the band termination platform. Refer to Figure 50.

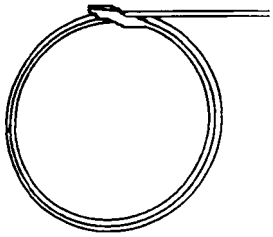

INSTALLATION CONFIGURATION OF THE BACB42F( ) SHIELD TERMINATOR BAND
Figure 50

(a) Put the free end of the band through the thin slot in the buckle.

(b) Pull the free end through the buckle until the diameter of the loop is approximately the same size as the diameter of the band termination platform on the backshell.

(c) Put the free end of the BACB42F() shield terminator band through the thin slot in the buckle again.

(d) Pull the free end through the buckle until the inner surface of the second loop is against the surface of the first loop.

(8) Pull the release trigger of the tool in the direction of the pull-up handle.

(9) Put the free end of the terminator band into the tool. Refer to Figure 51.

Make sure that the loop is pointed away from the tool.

For training purposes only!

BOEING PROPRIETARY - Copyright © Unpublished Work - See title page for details

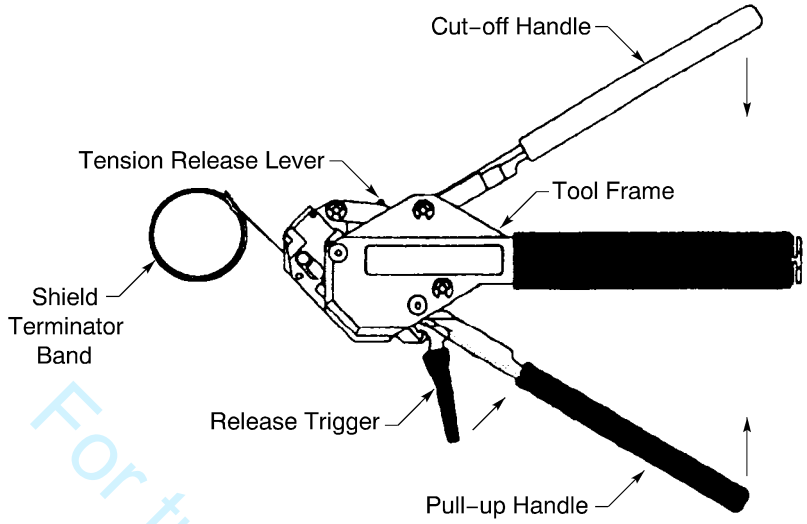

POSITION OF THE BACB42F( ) SHIELD TERMINATOR BAND IN THE TOOL
Figure 51

(10) Pull the pull-up handle to the tool frame to complete one cycle.
Refer to Figure 52.
NOTE: The terminator band is held in the internal grip mechanism of the tool.

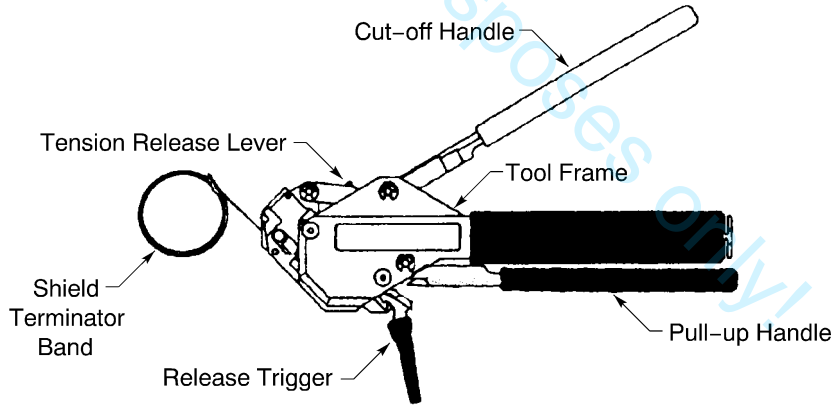

POSITION OF THE PULL-UP HANDLE AT THE END OF A CYCLE
Figure 52

(11) Align the edges of the two loops of the terminator band. Refer to Figure 53.
Make sure that the edge of a loop is not more that 0.03 inch farther than the edge of the other loop.

For training purposes only!

BOEING PROPRIETARY - Copyright © Unpublished Work - See title page for details

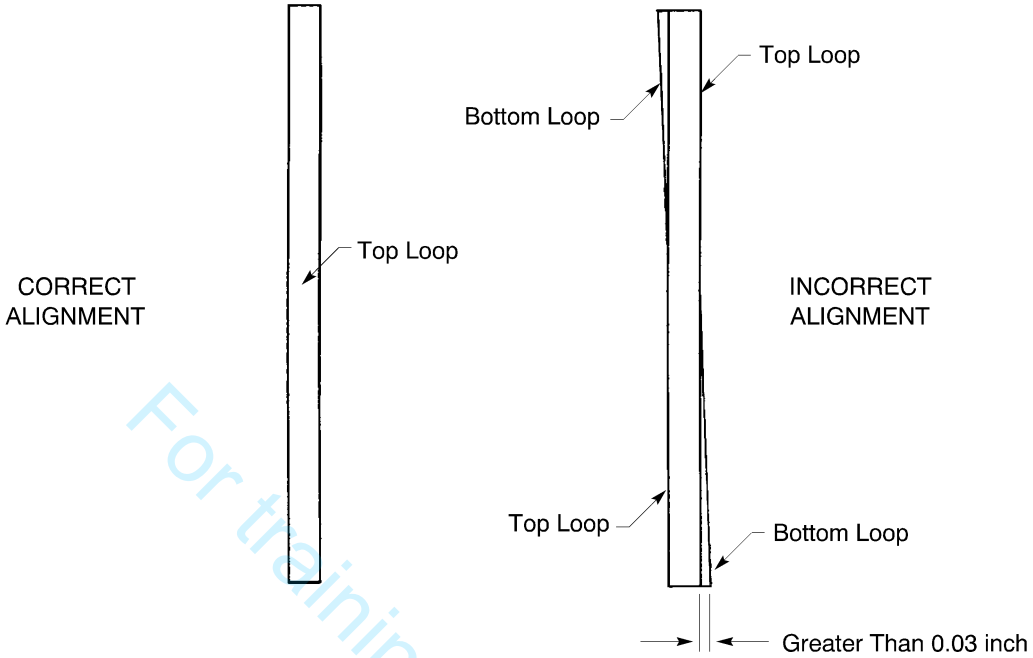

ALIGNMENT OF THE LOOPS OF THE SHIELD TERMINATOR BAND
Figure 53

(12) Pull the pull-up handle through the necessary cycles until the terminator band is tight around the backshell.

Make sure that the position of the pull-up handle at the end of the last cycle is the position of the handle at the end of a cycle. Refer to Figure 52.

(13) If it is necessary to loosen or remove the terminator band after the band is tightened:

(a) Hold the pull-up handle tightly.

(b) Push the tension release lever forward.

(c) Release the pull-up handle.

NOTE: The pull-up handle opens automatically.

(d) Pull the release trigger to the tool frame.

(e) Loosen the band and do the installation again from Step (8).

(f) If it is necessary, remove the band and do the installation again from Step (3).

(14) Pull the cut-off handle to the tool frame.

(15) Pull the release trigger of the tool to cut the band.

(16) Remove the unwanted length of the band from the tool.

(17) Put the shield terminator band on the band termination platform. Refer to Figure 54.

For training purposes only!

BOEING PROPRIETARY - Copyright © Unpublished Work - See title page for details

ASSEMBLY OF BACC65BJ AND BACC65BK CONNECTORS

Make sure that the buckle of the band:

- Does not make an overlap with a shield ground wire
- Does not make an overlap with the slot on the platform
- Does not touch the collar of the platform
- Stays flat on the platform.

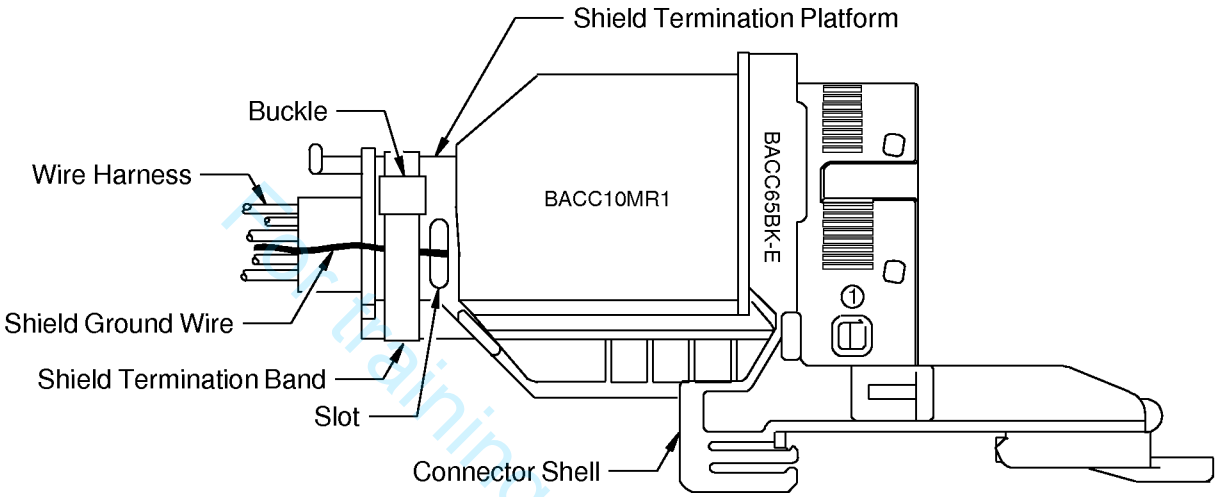

POSITION OF THE SHIELD TERMINATOR BAND
Figure 54

(18) For the shield ground wires of the cables of the wire harness, remove the necessary length of each shield ground wire to make the distance from the end of the shield ground wire to the slot equal to 2.5 approximately inches.

(19) For the shield ground wires of the jumper wires, remove the necessary length of each shield ground wire to make the distance from the end of the shield ground wire to the band approximately equal to 0.10 inch ±0.05 inch. Refer to Figure 55.

For training purposes only!

BOEING PROPRIETARY - Copyright © Unpublished Work - See title page for details

ASSEMBLY OF BACC65BJ AND BACC65BK CONNECTORS

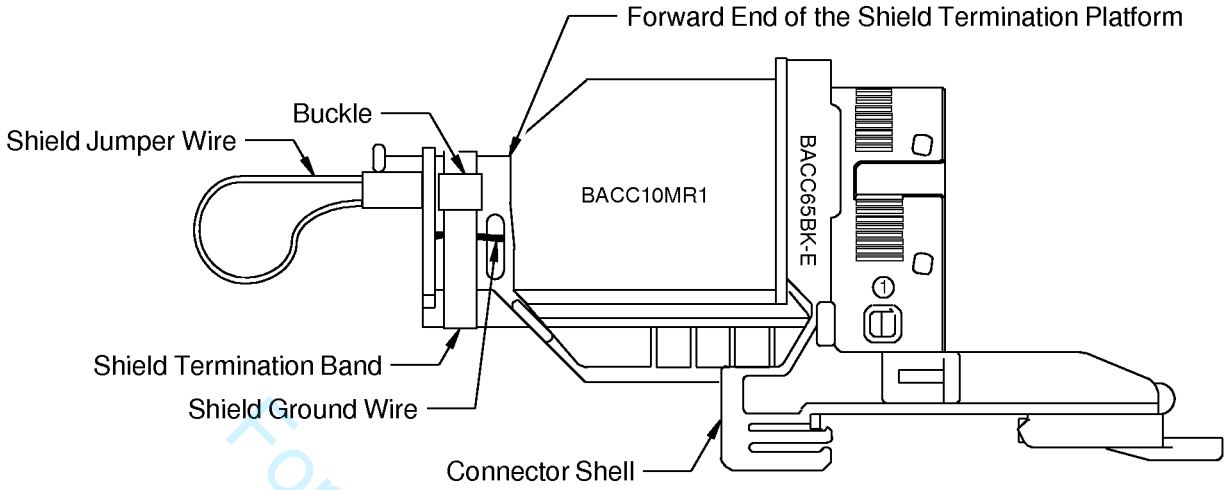

SHIELD GROUND WIRES OF THE JUMPER WIRES
Figure 55

(20) Put 2 to 3 layers of the PTFE tape on the shield terminator band.

NOTE: The tape can be cut longitudinally to decrease the width for a good fit on the shield termination platform.

Make sure that:

- The center of the tape is aligned approximately with the center of the band
- The edges of the tape are approximately aligned
- The edges of the tape that is cut longitudinally extend farther than the edges of the band
- The edges of the tape that is cut longitudinally extend farther than the end of the shield ground wires that are cut near the rear edge of the band.

(21) Put 2 to 3 layers of Type I silicone tape on the PTFE tape.

NOTE: The tape can be cut longitudinally to decrease the width for a good fit on the shield termination platform.

Make sure that:

- The tape starts at the forward end of the shield termination platform
- The edges of the tape are approximately aligned
- The termination slots cannot be seen

(22) Put the shield ground wires of the cables of the wire harness against the wire harness.

Make sure that each shield ground wire does not make an overlap with a different shield ground wire.

(23) Put a layer of Type I silicone tape on the wire harness and the shield ground wires. Refer to Figure 56.

For training purposes only!

BOEING PROPRIETARY - Copyright © Unpublished Work - See title page for details

Make sure that:

- The layer of tape starts at the rear end of the cable exit
- Each layer of the tape makes approximately a 35 percent overlap
- The layer of tape extends 0.25 inch to 0.50 inch farther than the longest shield ground wire
- The layer of tape at the end makes approximately a 100 percent overlap.

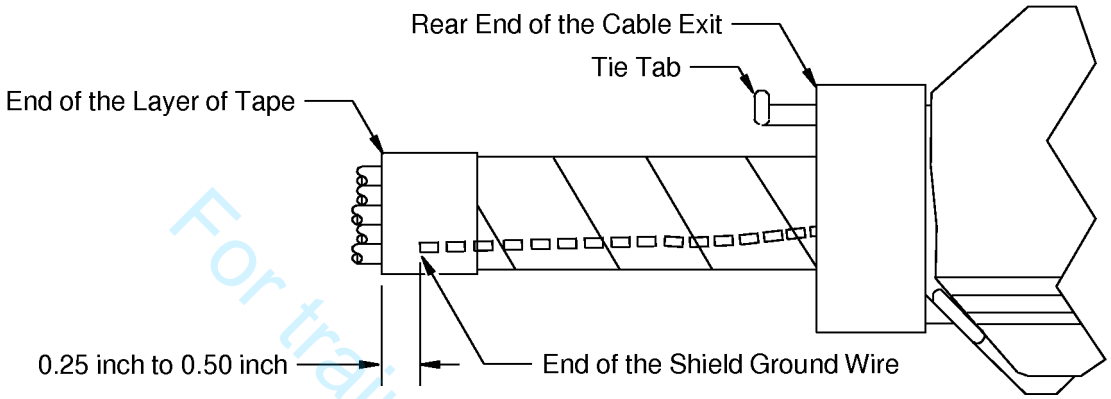

POSITION OF THE LAYER OF THE TAPE ON THE WIRE HARNESS
Figure 56

(24) Assemble a plastic wire harness tie on the wire harness and the strain relief tab.

Refer to:

- Figure 57
- Subject 20-10-11 for the procedure to assemble the plastic tie.

Make sure that the buckle of the plastic strap is on the side of the wire harness that is opposite of the strain relief tab.

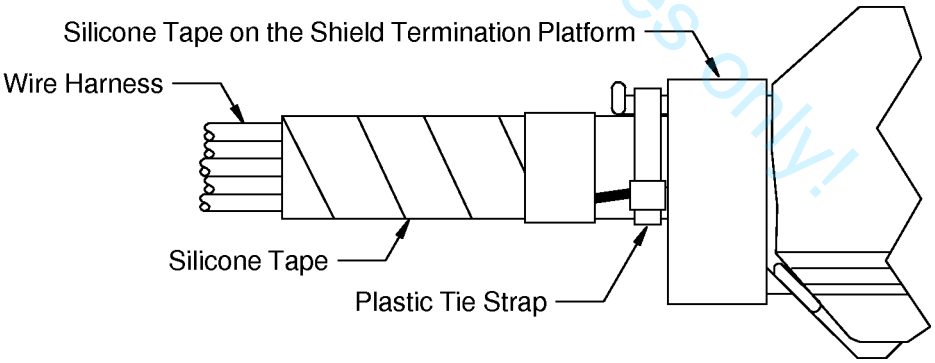

POSITION OF THE WIRE HARNESS ON THE STRAIN RELIEF TAB
Figure 57

X. Installation of the Overall Heat Shrinkable Sleeve

(1) If a sleeve is specified, cut an approximate 4 inch length of the specified sleeve along its longitudinal axis.

(2) If a sleeve is not specified:

BOEING PROPRIETARY - Copyright © Unpublished Work - See title page for details
For training purposes only!

(a) Make a selection of a Grade B, Class 1 heat shrinkable sleeve from Subject 20-00-11.

Make sure that the diameter of the sleeve is larger diameter than the diameter of the wire harness.

(b) Cut an approximate 4 inch length of the sleeve along its longitudinal axis.

(3) Wind the heat shrinkable sleeve around the rear surface of the backshell and the wire harness.

Make sure that:

- The longitudinal axis of the heat shrinkable sleeve is parallel to the longitudinal axis of the wire harness
- The overlap of the layers of sleeve is more than 0.25 inch.

(4) Assemble a wire harness tie 0.25 inch to 0.50 inch from each end of the sleeve. Refer to Subject 20-10-11.

(5) Assemble a wire harness tie in the center of the sleeve. Refer to Subject 20-10-11.

6. CONNECTOR POLARIZATION

A. Connector Polarization:

Procedure to make sure the correct posts or receptacles position are installed on the connector shell:

The polarization code from the connector shell identifies the position of:

- The polarization posts on the plug connector shell
- The polarization receptacles on the receptacle connectors shell.

(1) Find the polarization code in the connector part number from the equipment list, refer to Figure 1 for the connector part number structure.

(2) Find the polarization code from the connector shell. Refer to Paragraph 6.B..

(3) Match the polarization code from the equipment list with the polarization code from the connector shell.

(4) If the code from the connector shell does not agree with the code in the part number from the equipment list, adjust the position of the posts or receptacles to show the correct code on the connector shell. Refer to Paragraph 6.C..

For training purposes only!

BOEING PROPRIETARY - Copyright © Unpublished Work - See title page for details

ASSEMBLY OF BACC65BJ AND BACC65BK CONNECTORS

B. Polarization Post and Polarization Receptacle Positions

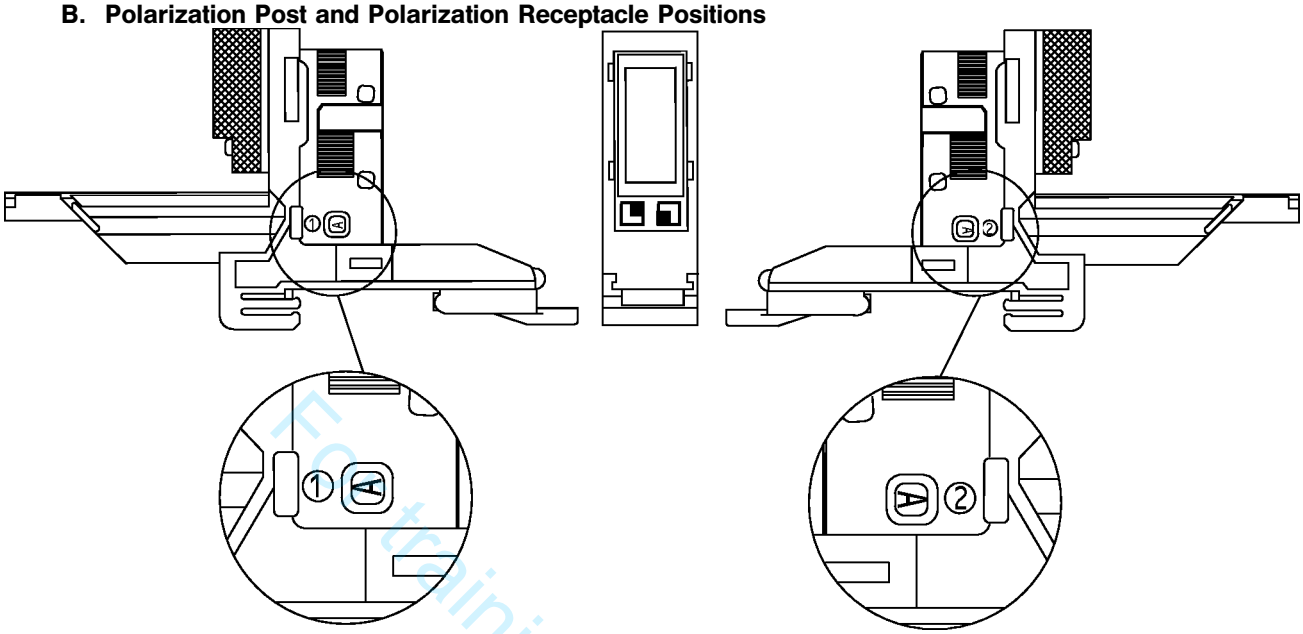

LOCATION OF THE POLARIZATION RECEPTACLES ON THE RECEPTACLE SHELL
Figure 58

For training pursposes only!

BOEING PROPRIETARY - Copyright © Unpublished Work - See title page for details

ASSEMBLY OF BACC65BJ AND BACC65BK CONNECTORS

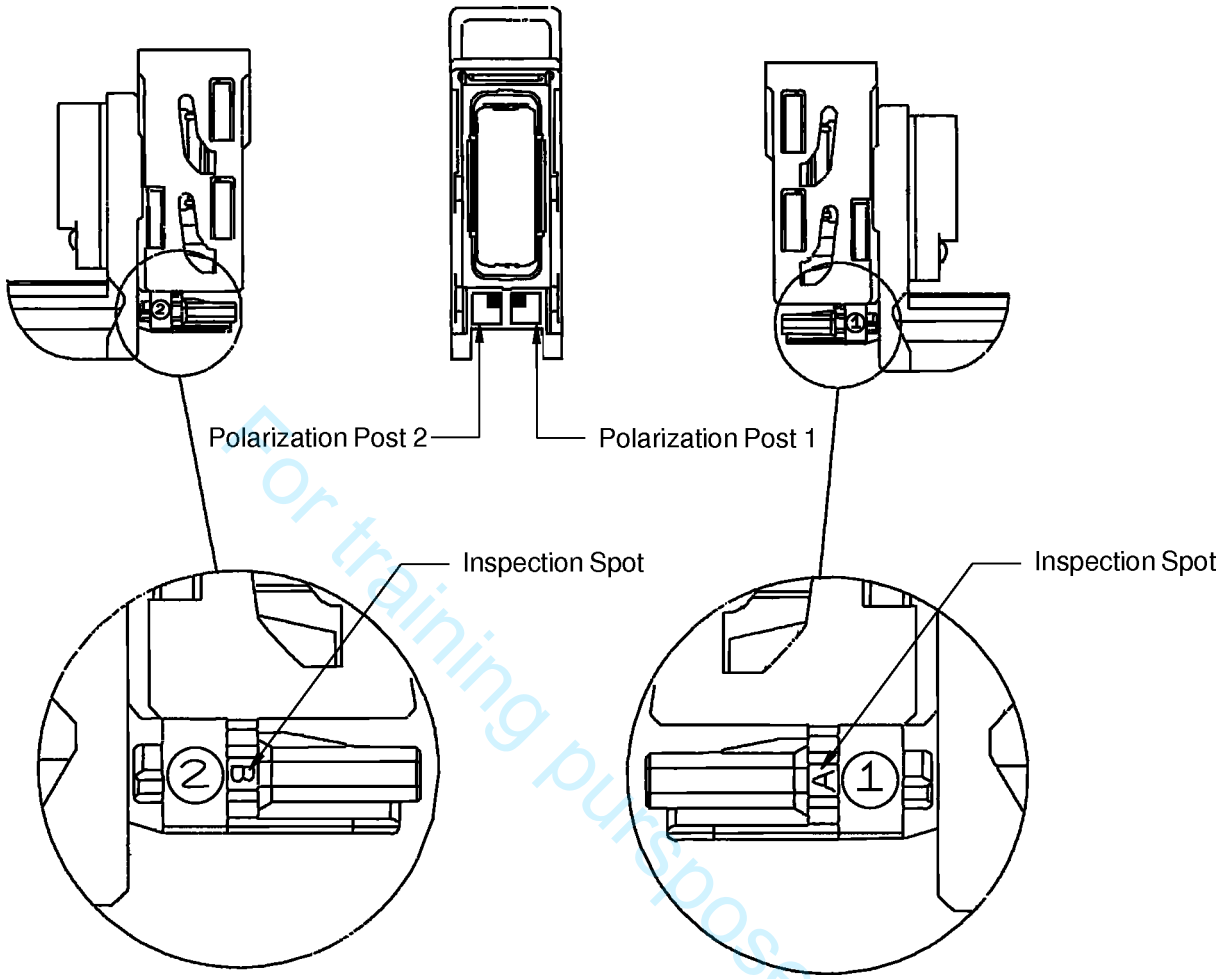

LOCATION OF THE POLARIZATION POSTS ON THE PLUG SHELL
Figure 59

For training purposes only!

Table 24
POLARIZATION POST AND POLARIZATION RECEPTACLE POSITIONS

Polarization Code	Plug Shell		Receptacle Shell	
	Post 1	Post 2	Receptacle 1	Receptacle 2
AA	A	A	A	A
AB		B		B
AC		C		C
AD		D		D
BA	B	A	B	A
BB		B		B
BC		C		C
BD		D		D

BOEING PROPRIETARY - Copyright © Unpublished Work - See title page for details

Table 24 (continued)

Polarization Code	Plug Shell		Receptacle Shell	
	Post 1	Post 2	Receptacle 1	Receptacle 2
CA	C	A	C	A
CB		B		B
CC		C		C
CD		D		D
DA	D	A	D	A
DB		B		B
DC		C		C
DD		D		D

For training purposes only!

C. Change of the Polarization Post and Polarization Receptacle Positions

Table 25
NECESSARY TOOLS

Tool	Supplier
Screwdriver, Flat Blade	An available source

(1) Make a selection of a small flat blade screwdriver. Make sure that its tip is able to go into the slot. Refer to Figure 60 and Table 25.

(2) Put the tip of the screwdriver into the slot of the shell with the flat part of the tip against the end of the post or receptacle.

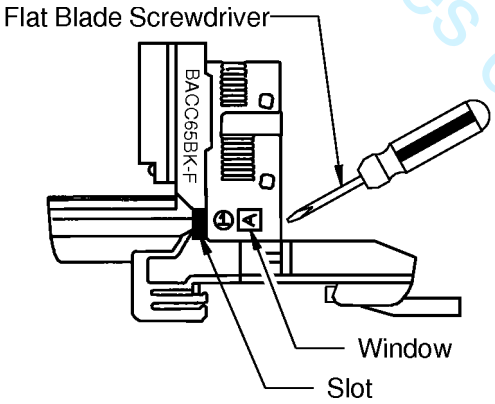

LOCATION TO PUT SCREWDRIVER TO REMOVE THE POST OR RECEPTACLEL
Figure 60

(3) Push the post or receptacle forward to release them from the connector shell.

(4) Place the screwdriver into the window and push the post or receptacle forward again to fully remove it.

BOEING PROPRIETARY - Copyright © Unpublished Work - See title page for details

(5) Push the polarization post or polarization receptacle in the correct position into its hole in the connector shell. Refer to Figure 61.

Make sure to:

- Show the correct code on the windows
- Install the posts or receptacles one at a time
- Fully engage each post or receptacle in the hole in the connector shell.

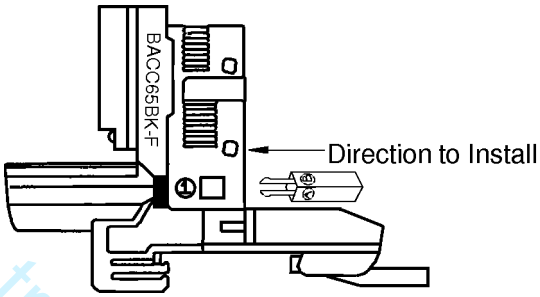

POLARIZATION POST AND RECEPTACLE INSTALLATION
Figure 61

For training purposes only!

7. CONNECTOR INSTALLATION

A. Equipment Identification

The identification label on the wire harness near the connector can have this information:

- The equipment number for the connector or the connector insert
- The mate-with disconnect panel number
- The connector position on the panel
- The mate-with nomenclature
- The wire harness number.

Refer to Figure 62.

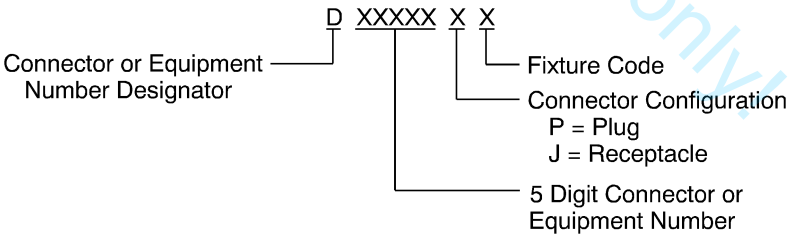

EQUIPMENT NUMBER STRUCTURE
Figure 62

B. Installation of the Receptacle

This procedure applies to installation of the receptacle that has a ground block.

BOEING PROPRIETARY - Copyright © Unpublished Work - See title page for details

ASSEMBLY OF BACC65BJ AND BACC65BK CONNECTORS

Table 26
NECESSARY TOOLS

Tool	Example	Maximum Shaft Diameter (inch)
A shaft that has a handle	Screwdriver, Hex or Flat Blade	1/8

(1) Make sure that the spring latch is locked in the retracted position. Refer to Figure 63.

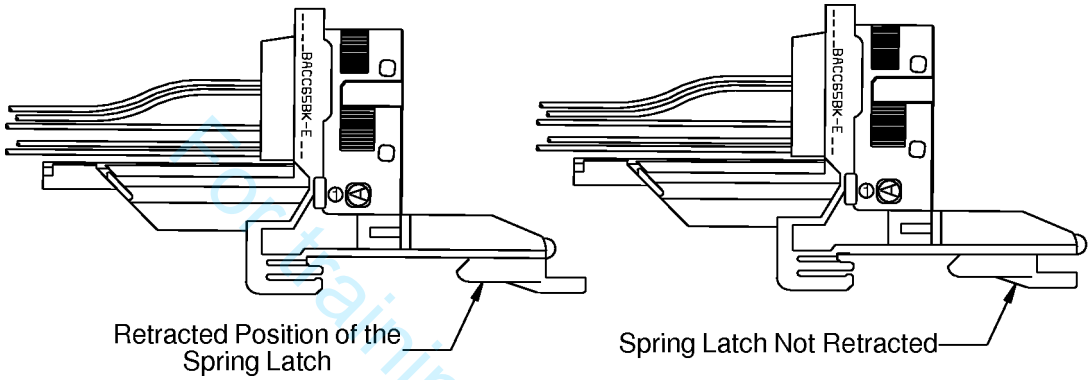

SPRING LATCH POSITIONS
Figure 63

(2) If the spring latch is not in the retracted position:

(a) Push the spring latch to the retracted position. Hold the spring latch with a finger to make sure that the latch catches in the base of the connector. Refer to Figure 64.

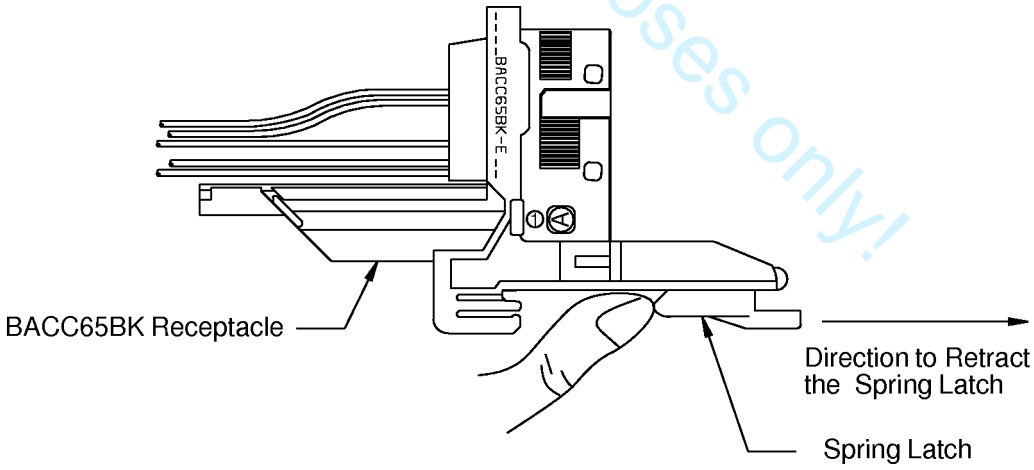

DIRECTION TO RETRACT THE SPRING LATCH
Figure 64

(b) If it is necessary, make a selection of a tool from Table 26 to help push the spring latch to the retracted position. Refer to Figure 65.

Make sure that the latch catches in the base of the connector.

BOEING PROPRIETARY - Copyright © Unpublished Work - See title page for details
For training purposes only!

ASSEMBLY OF BACC65BJ AND BACC65BK CONNECTORS

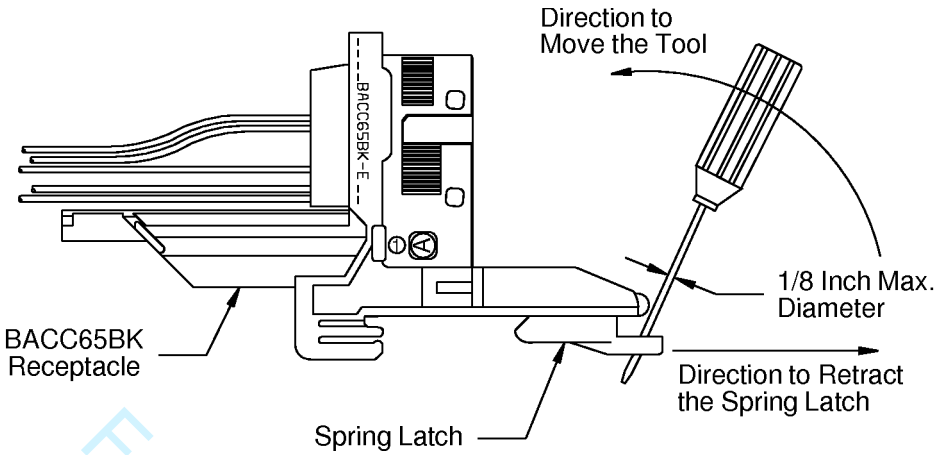

DIRECTION TO MOVE THE TOOL TO RETRACT THE SPRING LATCH
Figure 65

(3) Find the mounting location of the receptacle connector on the mounting track. Refer to Figure 66.

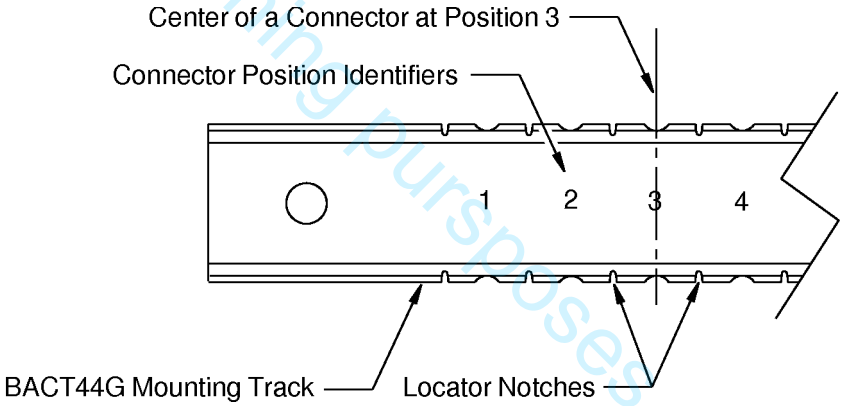

LOCATION TO INSTALL A RECEPTACLE CONNECTOR ON THE MOUNTING TRACK
Figure 66

(4) Put the receptacle spring fingers against one edge of the mounting track. Refer to Figure 67.

For training purposes only!

BOEING PROPRIETARY - Copyright © Unpublished Work - See title page for details

ASSEMBLY OF BACC65BJ AND BACC65BK CONNECTORS

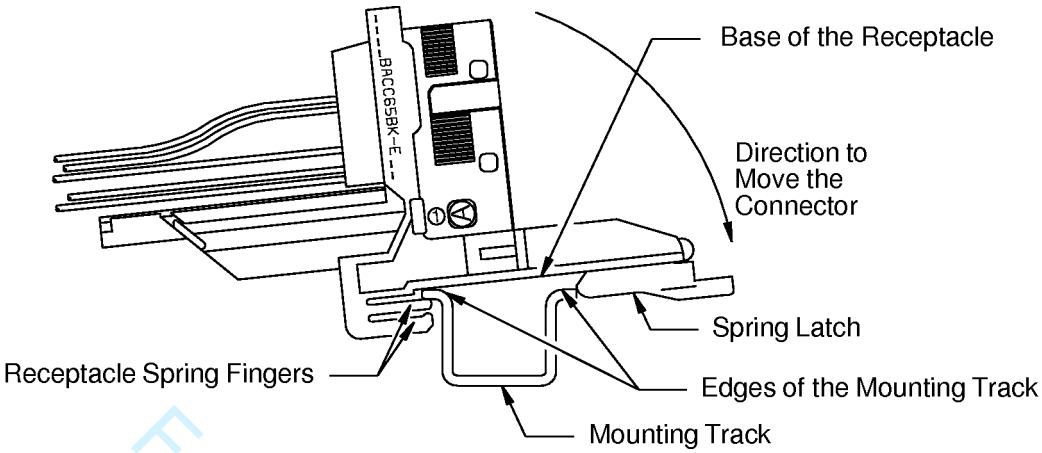

SPRING FINGERS ON THE EDGE OF THE MOUNTING TRACK
Figure 67

(5) Hold the spring fingers against the edge of the mounting track, and at the same time, move the receptacle onto the mounting track. Refer to Figure 67.

Make sure that the base of the receptacle is against both edges of the mounting track.

(6) Hold the receptacle against both edges of the mounting track. At the same time, push the spring latch release button in the base of the receptacle to lock the receptacle to the mounting track. Refer to Figure 68.

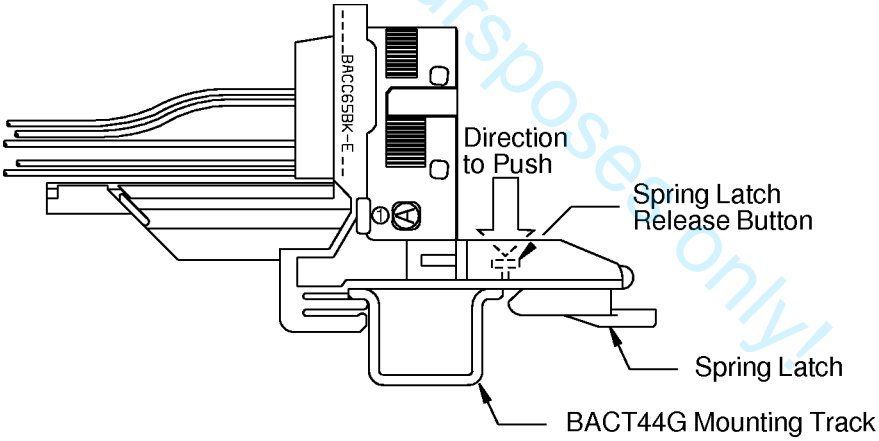

LOCATION OF THE BUTTON TO PRESS TO LOCK THE RECEPTACLE TO THE MOUNTING TRACK
Figure 68

(7) Make sure that the connector is locked on the mounting track. Refer to Figure 69.

For training purposes only!

BOEING PROPRIETARY - Copyright © Unpublished Work - See title page for details

ASSEMBLY OF BACC65BJ AND BACC65BK CONNECTORS

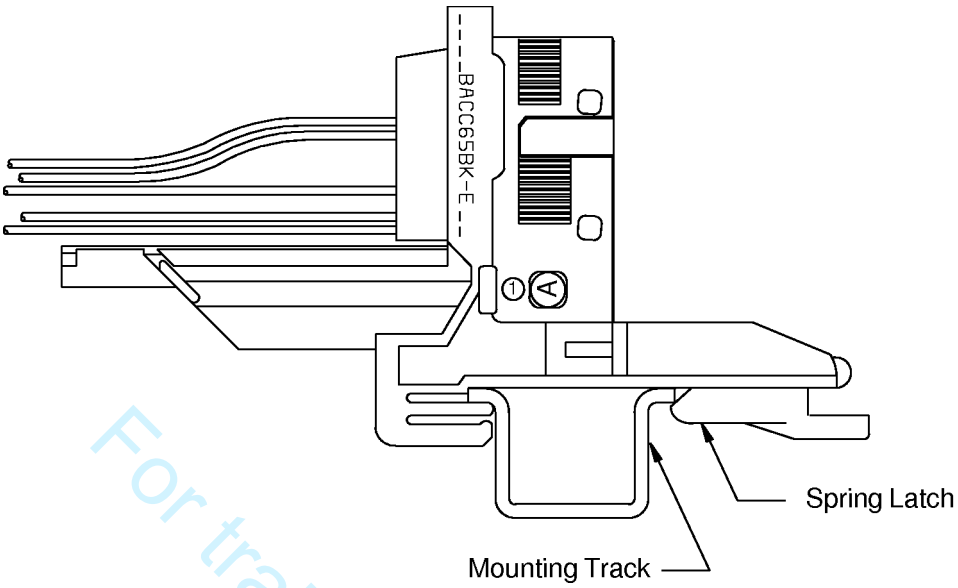

SPRING LATCH OF THE RECEPTACLE CONNECTOR LOCKED AGAINST THE MOUNTING TRACK
Figure 69

For training purposes only!

C. Plug and Receptacle Connection

Before mating a plug and a receptacle that have fiber optic termini, inspect and, if necessary, clean the fiber optic termini. Refer to Subject 20-12-20.

(1) Pull the cam latch on the BACC65BJ( ) plug connector away from the connector until it stops.

(2) Align the polarization hardware of the plug connector with the polarization of the receptacle connector. Refer to Figure 70.

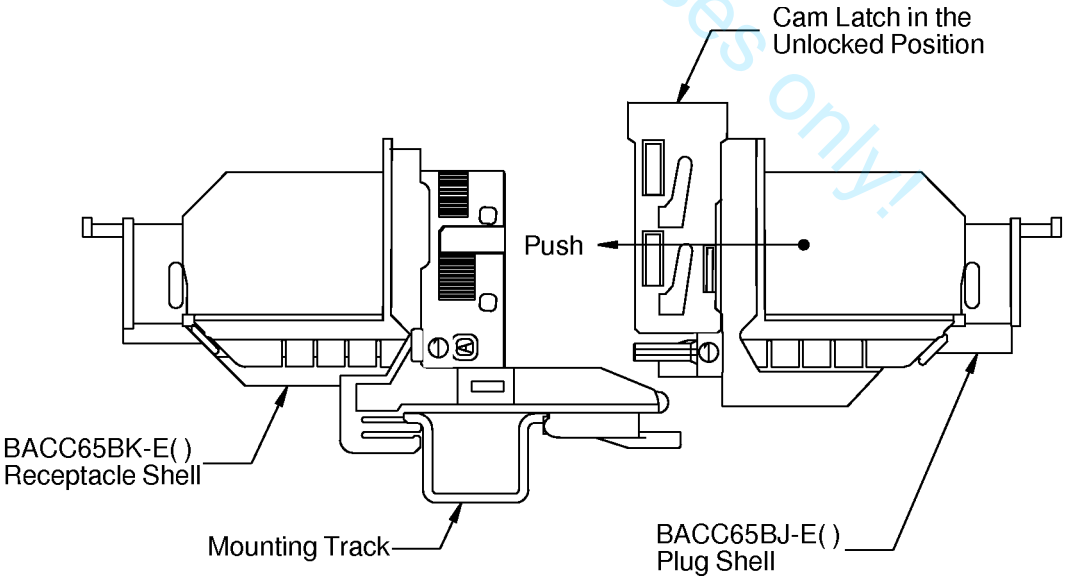

ALIGNING THE PLUG AND RECEPTACLE
Figure 70

BOEING PROPRIETARY - Copyright © Unpublished Work - See title page for details

(3) Push the plug forward until the front surface of the insert cavity of the receptacle is against the shell of the plug. Refer to Figure 71.

Make sure that the plug and the receptacle are fully engaged.

CAUTION: THE PLUG AND THE RECEPTACLE MUST BE FULLY ENGAGED. IF THE PLUG AND THE RECEPTACLE ARE NOT FULLY ENGAGED, DAMAGE TO A COUPLING FASTENER CAN OCCUR.

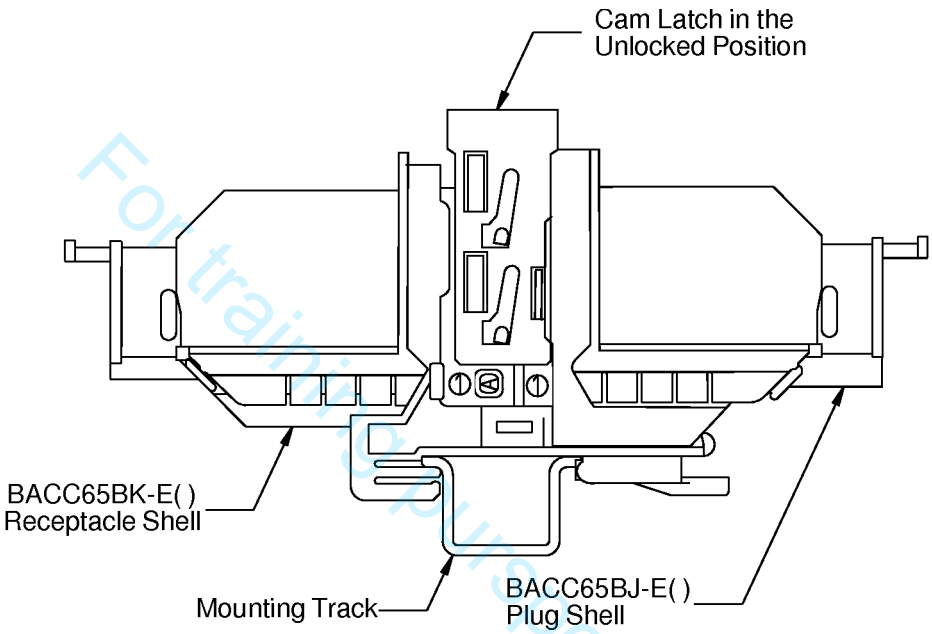

JOINING THE PLUG AND RECEPTACLE
Figure 71

(4) Push the cam latch toward the mated connectors until it stops in the locked position. Refer to Figure 72.

For training purposes only!

BOEING PROPRIETARY - Copyright © Unpublished Work - See title page for details

ASSEMBLY OF BACC65BJ AND BACC65BK CONNECTORS

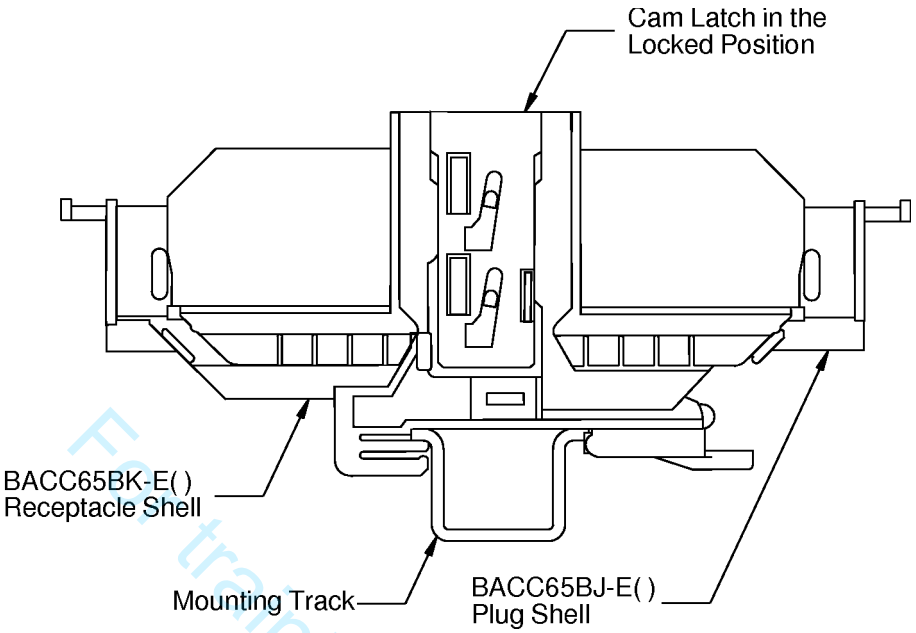

LOCKING THE PLUG AND RECEPTACLE
Figure 72

For training purposes only.

8. APPROVED TOOL SUPPLIERS

A. Contact Removal Tools

Table 27
CONTACT REMOVAL TOOL SUPPLIERS

Removal Tool	Supplier
ATR2079	Astro
ATR2080	Astro
M81969/14-11	QPL
RRX20B	Russtech

B. Contact Crimp Tools

Table 28
CRIMP TOOL SUPPLIERS

Crimp Tool	Supplier
M22520/1-01	QPL
M22520/2-01	QPL
WA22	Daniels
WA22LC	Daniels

BOEING PROPRIETARY - Copyright © Unpublished Work - See title page for details

Table 28 (continued)

Crimp Tool	Supplier
WA27F	Daniels

C. Contact Insertion Tools

Table 29
CONTACT INSERTION TOOL SUPPLIERS

Insertion Tool	Supplier
DAK83-20	Daniels
M81969/14-11	QPL
ST2220-2-28	Boeing

D. Special Tools

Table 30
SPECIAL TOOL SUPPLIERS

Tool	Supplier
282 521 002	Radiall
282 521 005	Radiall
600-061	Glenair
A30199	Band-It Idex

For training purposes only!

BOEING PROPRIETARY - Copyright © Unpublished Work - See title page for details

ASSEMBLY OF BACC65BC AND BACC65BD CONNECTORS

Paragraph		Page
1.	**PART NUMBERS AND DESCRIPTION**	**1**
A.	Connector Part Numbers	1
B.	Connector Description	2
C.	Size 8 Coax Contact Part Numbers	6
D.	Size 8 Quadrax Contacts	6
E.	Backshell Part Numbers	8
F.	Jackscrew and Jackpost Part Numbers for BACC65BC and BACC65BD Connectors	10
2.	**CONNECTOR DISASSEMBLY**	**11**
A.	Connector Separation	11
B.	Removal of the Receptacle	12
C.	Strain Relief Backshell Removal	12
D.	Seal Plug and Seal Rod Removal	14
E.	Contact Removal	14
3.	**CONNECTOR POLARIZATION**	**15**
A.	Connector Polarization	15
B.	Change of the Jackscrew Polarization Keyway on the Plug Connector	16
C.	Change of the Jackpost Polarization Key on the Receptacle Connector	17
D.	Change of the Polarization Code in the Part Number on the Connector	18
4.	**CONNECTOR ASSEMBLY**	**19**
A.	Assembly of S280W554-113 Size 8 Coax Contacts	19
B.	Assembly of Tyco 1757624-1 and 1883369-2 Size 8 Coax Contacts to BMS 13-65 Type 0F Coax Cable	24
C.	Assembly of Size 8 BACC47GA1 and BACC47GB1 Quadrax Contacts	27
D.	Installation of Size 8 Coax Contacts and Size 8 Quadrax Contacts	33
E.	Seal of an Empty Contact Cavity	37
F.	Installation of the BACC10MC(), BACC10MD(), and BACC10NJ() Backshells	38
5.	**CONNECTOR INSTALLATION**	**41**
A.	Installation of the Receptacle	41
B.	Plug and Receptacle Connection	43
6.	**APPROVED TOOL SUPPLIERS**	**44**
A.	Contact Removal Tools	44
B.	Contact Crimp Tools	44
C.	Special Tools	44

For training purposes only!

20-74-16 CONTENTS

BOEING PROPRIETARY - Copyright © Unpublished Work - See title page for details

ASSEMBLY OF BACC65BC AND BACC65BD CONNECTORS

1. PART NUMBERS AND DESCRIPTION

A. Connector Part Numbers

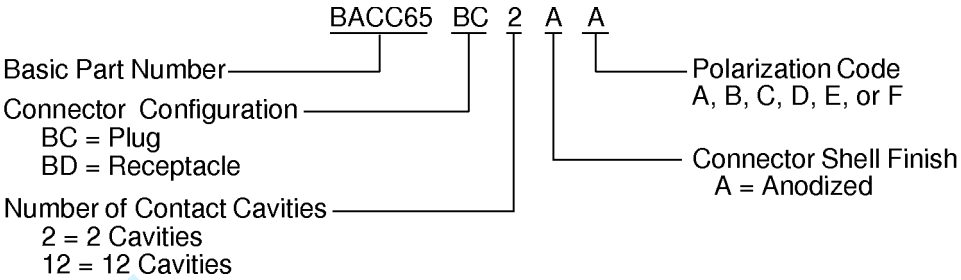

CONNECTOR PART NUMBER STRUCTURE
Figure 1

Table 1
CONNECTOR AND BACKSHELL PART NUMBERS

Boeing Standard	Part	Configuration
BACC65BC2( )	Plug	2 Contact Cavities
BACC65BD2( )	Receptacle	
BACC65BC12( )	Plug	12 Contact Cavities
BACC65BD12( )	Receptacle	

Table 2
APPROVED CONNECTOR SUPPLIERS

Connector	Supplier
BACC65BC( )	Tyco
BACC65BD( )	

For training purposes only!

BOEING PROPRIETARY - Copyright © Unpublished Work - See title page for details

ASSEMBLY OF BACC65BC AND BACC65BD CONNECTORS

B. Connector Description

The BACC65BC( ) and BACC65BD( ) rectangular connector plug and receptacle have these technical features:

- Are available with 2 contact cavities or 12 contact cavities
- Can accept both size 8 coax contacts and size 8 quadrax contacts
- The connector insert and shell are a one piece design
- The BACC65BC( ) plug accepts size 8 coax socket contacts and size 8 quadrax socket contacts
- The BACC65BD( ) receptacle accepts size 8 coax pin contacts and size 8 quadrax pin contacts
- The BACC65BC( ) plug has the jackscrew
- The BACC65BD( ) receptacle has the jackpost
- The contact cavities have keyways
- The jackscrew and jackpost have 6 flat polarization positions A,B,C,D,E, and F
- The contacts are inserted and removed from the rear face of the connector
- The backshell is plastic, is removable, and holds the cables with wire harness tie attachments.

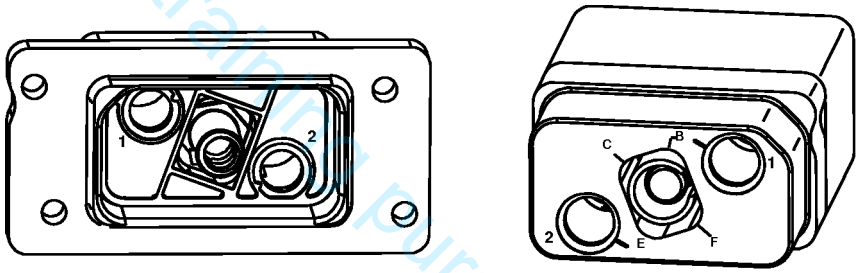

Receptacle Plug

THE 2 POSITION BACC65BD2( )RECEPTACLE AND BACC65BC2( )PLUG
Figure 2

For training purposes only!

BOEING PROPRIETARY - Copyright © Unpublished Work - See title page for details

ASSEMBLY OF BACC65BC AND BACC65BD CONNECTORS

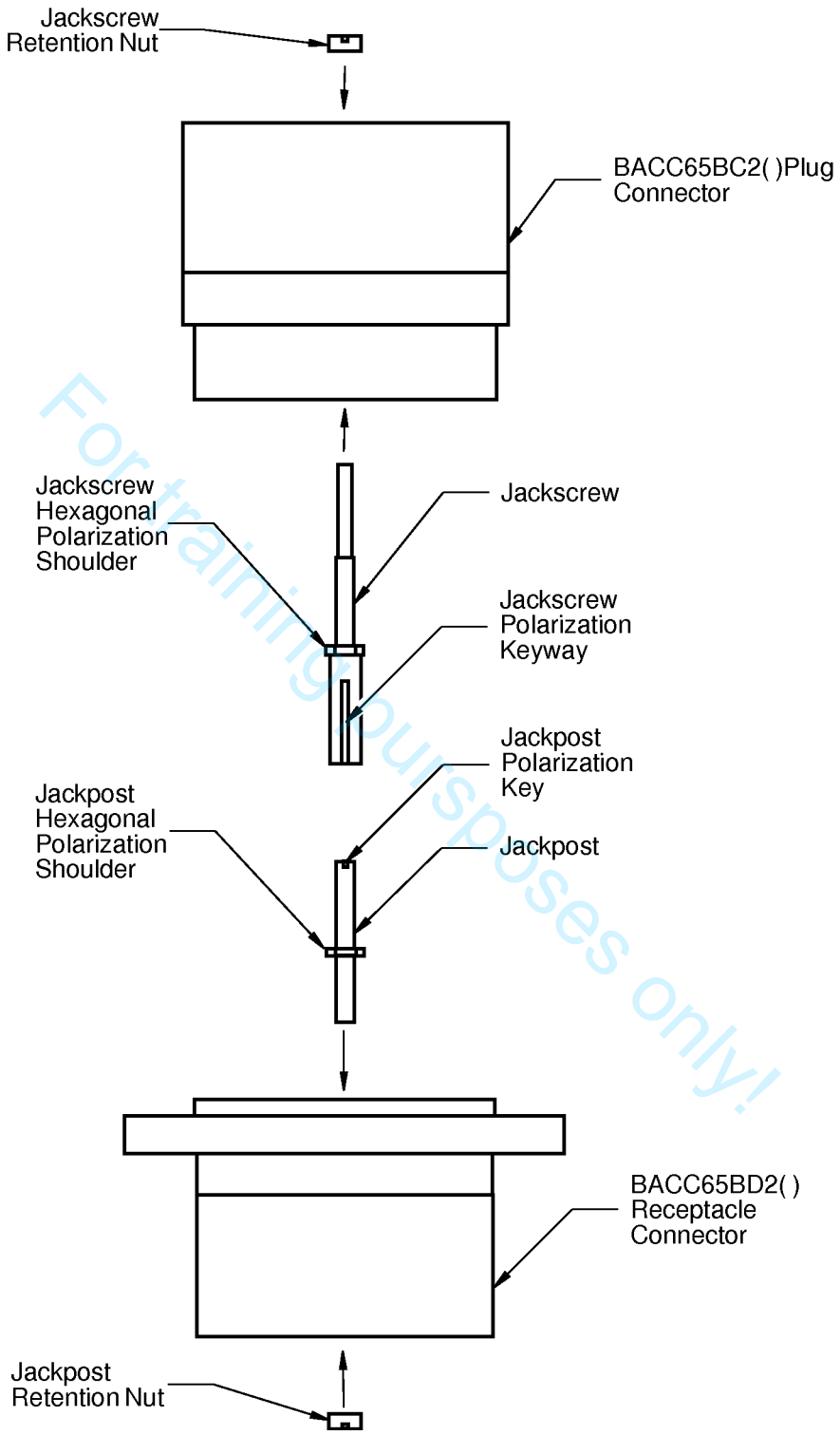

BACC65BC2( ) AND BACC65BD2( ) CONNECTOR CONFIGURATION
Figure 3

For training purposes only!

BOEING PROPRIETARY - Copyright © Unpublished Work - See title page for details

ASSEMBLY OF BACC65BC AND BACC65BD CONNECTORS

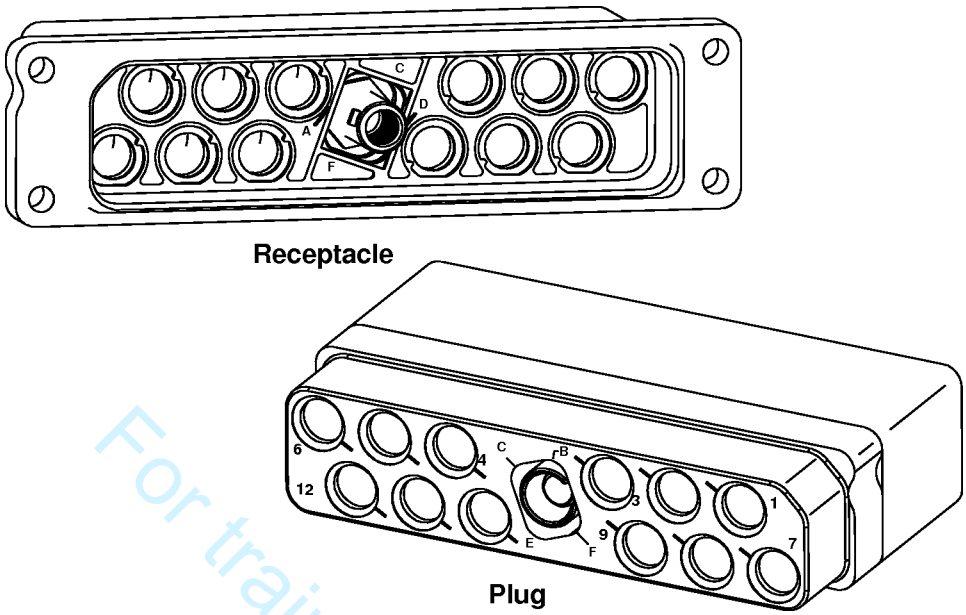

THE 12 POSITION BACC65BD12( ) RECEPTACLE AND BACC65BC12( )PLUG
Figure 4

For training pursposes only!

BOEING PROPRIETARY - Copyright © Unpublished Work - See title page for details

ASSEMBLY OF BACC65BC AND BACC65BD CONNECTORS

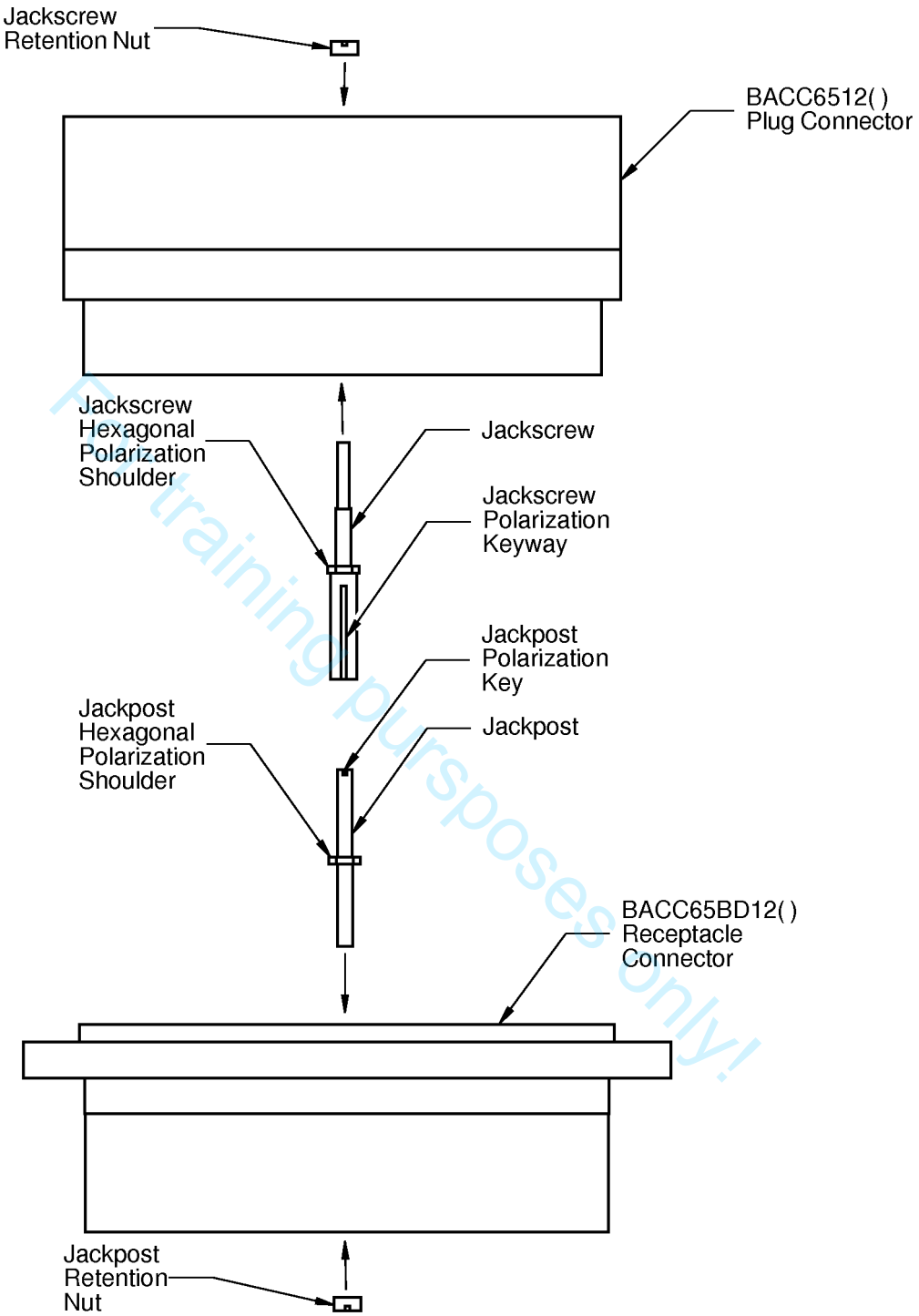

For training purposes only!

BACC65BC12( ) AND BACC65BD12( ) CONNECTOR CONFIGURATION
Figure 5

BOEING PROPRIETARY - Copyright © Unpublished Work - See title page for details

ASSEMBLY OF BACC65BC AND BACC65BD CONNECTORS

C. Size 8 Coax Contact Part Numbers

Table 3
SIZE 8 COAX CONTACT PART NUMBERS

Coax Contact			Coax Cable
Size	Type	Boeing Standard or Part Number	
8	Pin	1757624-1	BMS 13-65 Type 0F
	Socket	1883369-2	BMS 13-65 Type 0F
		S280W554-113	S280W503-2
			BMS 13-65 Type 0F

NOTE: The coax pin contact has an outer pin contact and an inner socket contact.

NOTE: The coax socket contact has an outer socket contact and an inner pin contact.

Table 4
APPROVED SUPPLIERS OF BOEING STANDARD SIZE 8 COAX CONTACTS

Coax Contact	Supplier
S280W554-113	ITT Cannon
1757624-1	Tyco
1883369-2	Tyco

Table 5
ALTERNATIVE PART NUMBERS FOR SIZE 8 COAX CONTACTS

Boeing Standard	Contact	
	Part Number	Supplier
S280W554-113	349-1087-004	ITT Cannon

D. Size 8 Quadrax Contacts

Table 6
BOEING STANDARD SIZE 8 QUADRAX CONTACTS

Contact Size	Type	Boeing Standard	Reference
8	Pin	BACC47GA1	Figure 6
8	Socket	BACC47GB1	Figure 7

For training purposes only!

BOEING PROPRIETARY - Copyright © Unpublished Work - See title page for details

ASSEMBLY OF BACC65BC AND BACC65BD CONNECTORS

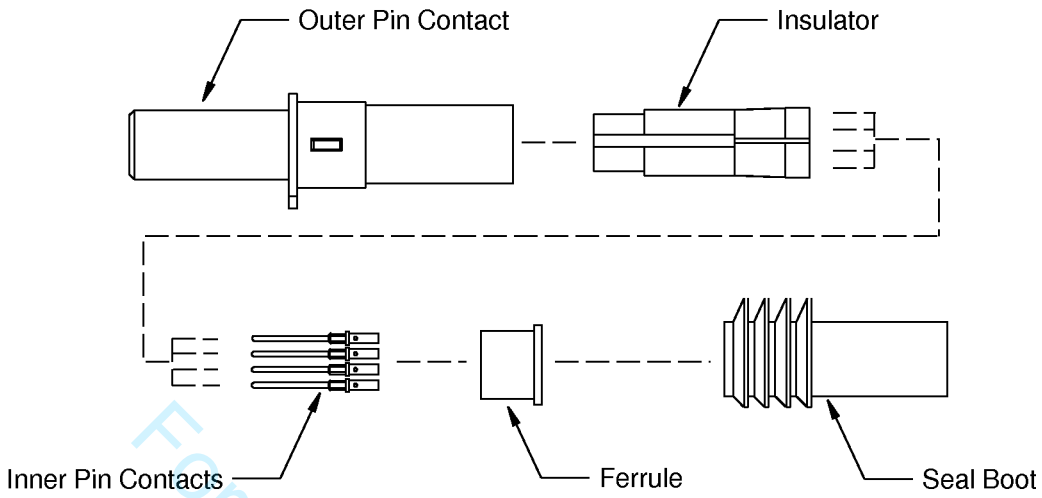

COMPONENTS SUPPLIED WITH THE BACC47GA QUADRAX PIN CONTACT
Figure 6

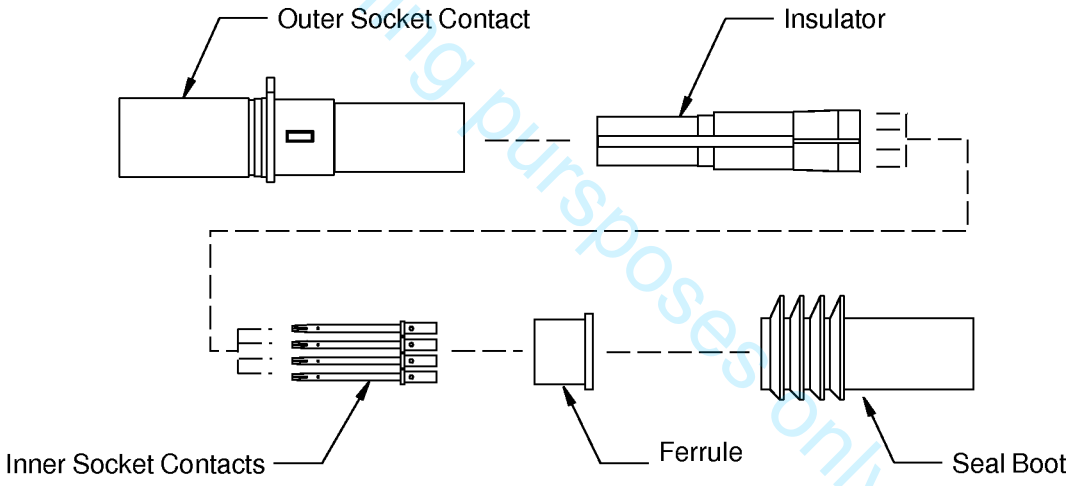

COMPONENTS SUPPLIED WITH THE BACC47GB QUADRAX SOCKET CONTACT
Figure 7

For training purposes only!

Table 7
SUPPLIER PART NUMBERS FOR BOEING STANDARD SIZE 8 QUADRAX CONTACTS

Boeing Standard	Alternative Contact	
	Part Number	Supplier
BACC47GA1	1445692-4	Tyco
BACC47GB1	1445693-4	Tyco

BOEING PROPRIETARY - Copyright © Unpublished Work - See title page for details

ASSEMBLY OF BACC65BC AND BACC65BD CONNECTORS

E. Backshell Part Numbers

Table 8
BACKSHELL PART NUMBERS

Boeing Standard	Description	Configuration
BACC10MC1	Plug Backshell	12 Position
BACC10MC2	Receptacle Backshell	
BACC10MD1	Plug Backshell	2 Position
	Receptacle Backshell	
BACC10NJ1	Plug Backshell	12 Position
	Receptacle Backshell	
BACC10NJ6	Plug Backshell	2 Position
	Receptacle Backshell	

Table 9
ALTERNATIVE BACKSHELL PART NUMBERS

Specified Backshell Part Number	Alternative Backshell Part Number
BACC10MC1	BACC10NJ1
BACC10MC2	BACC10NJ1
BACC10MD1	BACC10NJ6

For training purposes only!

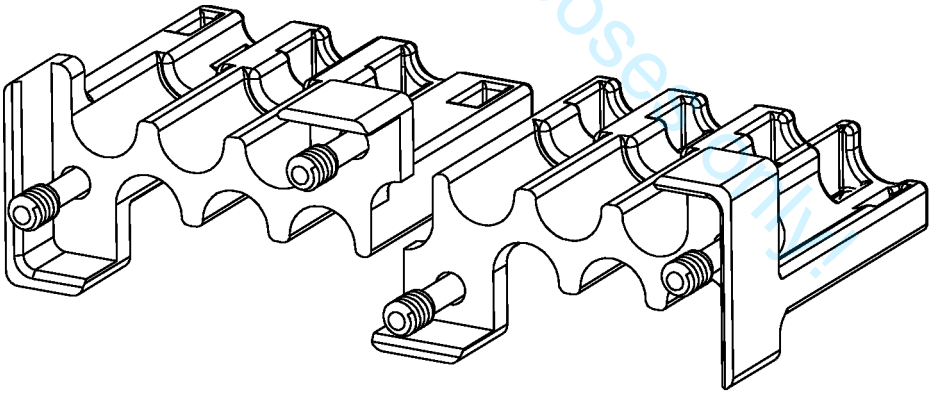

12 Position Plug Backshell Kit
(2 BACC10MC1 Backshells)

BACC10MC1 - 12 POSITION BACKSHELL FOR THE PLUG CONNECTOR
Figure 8

BOEING PROPRIETARY - Copyright © Unpublished Work - See title page for details

ASSEMBLY OF BACC65BC AND BACC65BD CONNECTORS

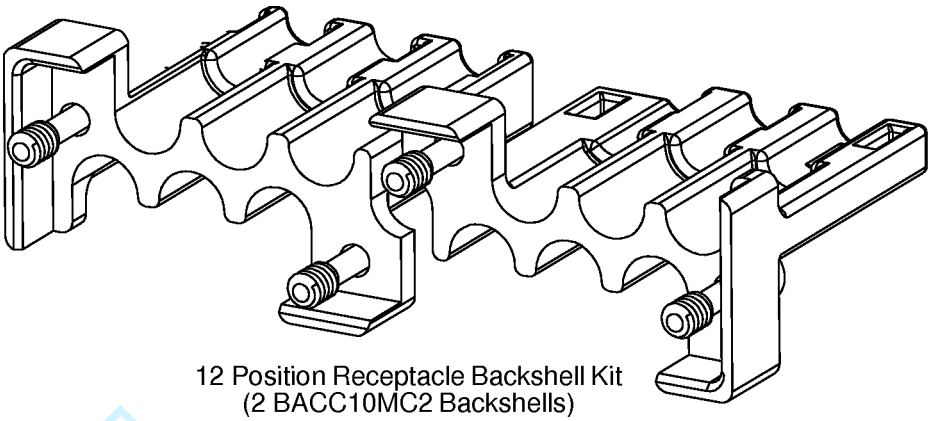

12 Position Receptacle Backshell Kit
(2 BACC10MC2 Backshells)

BACC10MC2 - 12 POSITION BACKSHELL FOR THE RECEPTACLE CONNECTOR
Figure 9

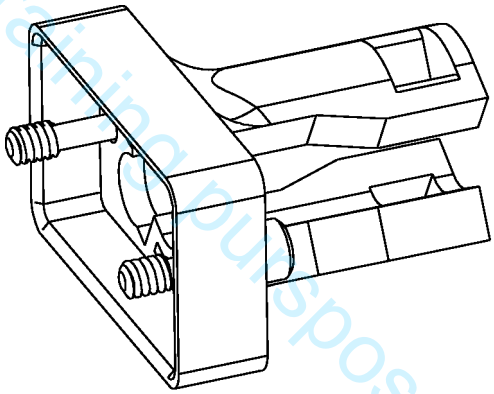

2 Position Backshell
(For Both Plugs and Receptacles)

BACC10MD1 - 2 POSITION BACKSHELL FOR THE PLUG OR THE RECEPATCLE CONNECTOR
Figure 10

For training purposes only!

BOEING PROPRIETARY - Copyright © Unpublished Work - See title page for details

ASSEMBLY OF BACC65BC AND BACC65BD CONNECTORS

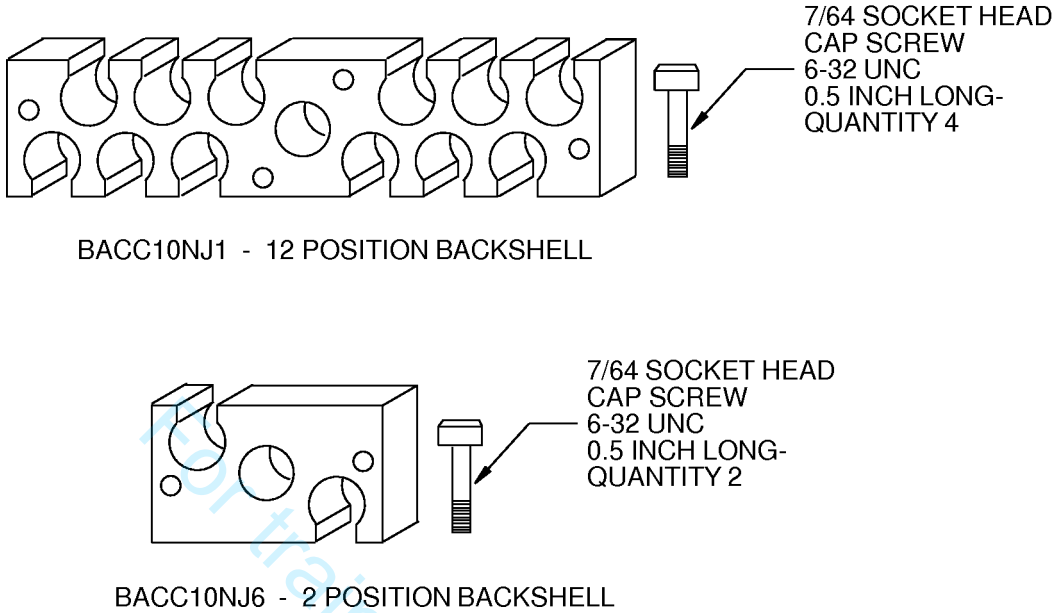

BACC10NJ BACKSHELLS FOR PLUG OR RECEPTACLE CONNECTORS
Figure 11

For training purposes only!

Table 10
APPROVED BACKSHELL SUPPLIERS

Boeing Standard	Supplier
BACC10MC()	Tyco
BACC10MD()	Tyco
BACC10NJ()	Tyco
	Glenair

F. Jackscrew and Jackpost Part Numbers for BACC65BC and BACC65BD Connectors

Table 11
JACKSCREW AND JACKPOST PART NUMBERS

Part Number	Description	Supplier	Reference
1738592-1	Receptacle Jackpost Kit	Tyco	Figure 12
1738592-2	Plug Jackscrew Kit	Tyco	Figure 13

BOEING PROPRIETARY - Copyright © Unpublished Work - See title page for details

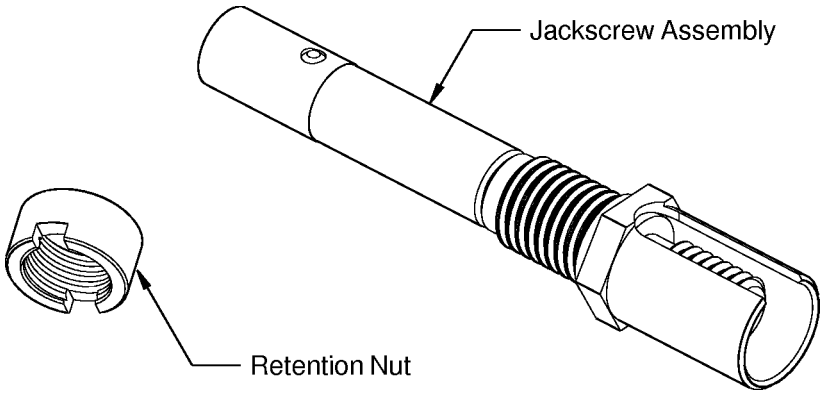

1738592-1 RECEPTACLE JACKPOST KIT
Figure 12

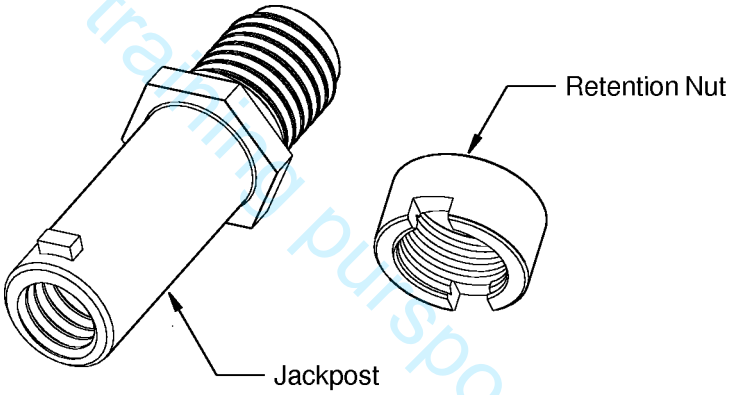

1738592-2 PLUG JACKSCREW KIT
Figure 13

For training purposes only!

2. CONNECTOR DISASSEMBLY

A. Connector Separation

Table 12
NECESSARY TOOLS

Tool	Type	Size (inch)
Wrench	Allen Wrench	9/64

(1) Make a selection of a wrench from Table 12.

NOTE: The wrench can have a ball style end.

(2) With the wrench, turn the jackscrew in the plug counterclockwise until the jackscrew disengages from the jackpost in the receptacle. Refer to Figure 2 and Figure 4.

(3) Pull the plug straight away from the receptacle.

BOEING PROPRIETARY - Copyright © Unpublished Work - See title page for details

B. Removal of the Receptacle

Table 13
NECESSARY TOOLS

Tool	Type	Size (inch)
Driver	Phillips Head Screwdriver	-
	Socket Wrench	1/4

(1) Make a selection of a driver from Table 13.

(2) Remove the two receptacle connector installation screws. Refer to Figure 14.

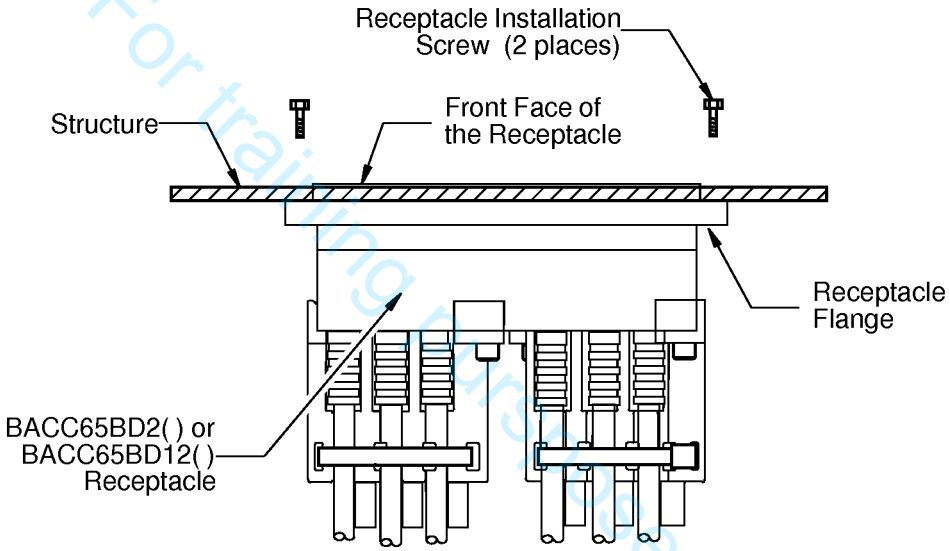

REMOVAL OF THE RECEPTACLE FROM THE STRUCTURE
Figure 14

(3) Pull the receptacle shell from the structure.

C. Strain Relief Backshell Removal

Table 14
BACKSHELL REMOVAL TOOLS

Tool	Supplier
Diagonal Cutters	An available source
Allen Wrench, 7/64 inch	An available source

(1) Make a selection of a pair of diagonal cutters from Table 14.

(2) Remove the plastic tie straps that hold the cables to the backshell and the plastic tie straps or wire harness ties that are less than 6 inches from the connector. Refer to Figure 15 and Figure 16.

For training purposes only!

BOEING PROPRIETARY - Copyright © Unpublished Work - See title page for details

ASSEMBLY OF BACC65BC AND BACC65BD CONNECTORS

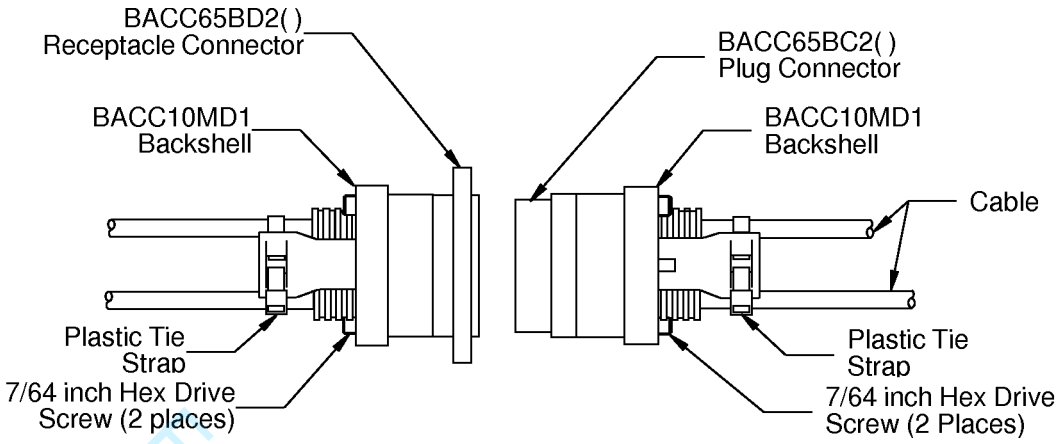

REMOVAL OF THE BACC10MD1 BACKSHELLS
Figure 15

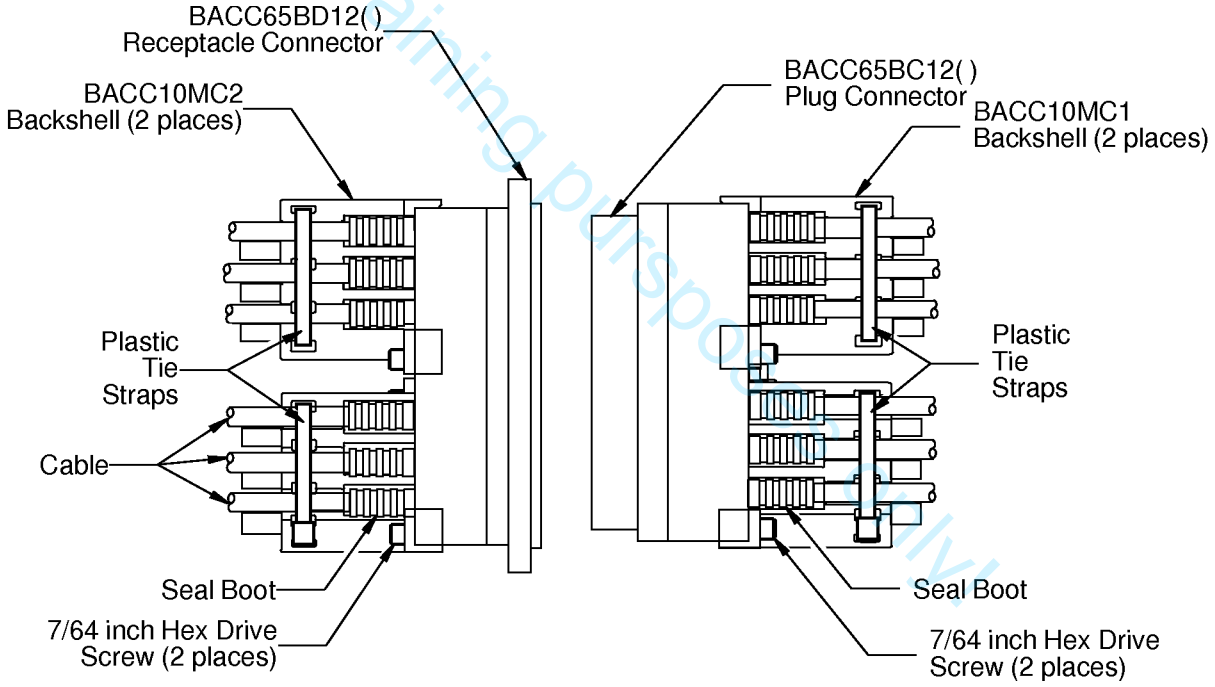

REMOVAL OF THE BACC10MC1 AND BACC10MC2 BACKSHELLS
Figure 16

(a) Cut the plastic tie straps at the head, parallel to the cables.

(b) Remove all the lose strap pieces.

(c) Examine the cables for damaged insulation.

For training purposes only!

BOEING PROPRIETARY - Copyright © Unpublished Work - See title page for details

ASSEMBLY OF BACC65BC AND BACC65BD CONNECTORS

CAUTION: MAKE SURE THAT YOU REMOVE AND DISCARD ALL THE PIECES OF THE LOSE PLASTIC TIE STRAPS. LOSE STRAP PIECES CAN CAUSE ABRASION AND CUTTING DAMAGE TO THE CABLE INSULATION.

(3) Make a selection of a wrench from Table 14.

(4) Disengage the threads of the backshell installation screws. Refer to Figure 15 and Figure 16.

NOTE: The screws are captivated and cannot be removed from the strain relief backshell.

(5) Pull the backshell from the connector shell.

(a) Push the backshell for the BACC65BC2( ) and BACC65BD2( ) connector along the cable away from the connector. It cannot be fully removed until the contacts are removed.

(b) Remove the backshell for the BACC65BC12( ) and BACC65BD12( ) connector.

D. Seal Plug and Seal Rod Removal

Table 15
NECESSARY TOOLS

Tool	Type
Pliers	Needle Nose

(1) Make a selection of a pair of pliers from Table 15.

(2) Tightly hold the end of the seal plug or the seal rod in the jaws of the pliers.

(3) Pull the seal plug or the seal rod directly out of the contact cavity.

E. Contact Removal

Table 16
CONTACT REMOVAL TOOLS FOR SIZE 8 COAX AND SIZE 8 QUADRAX CONNECTORS

Contact Cavity Size	Removal Tool Part Number	Supplier
8	1738894-1	Tyco
	1738196-1	Tyco

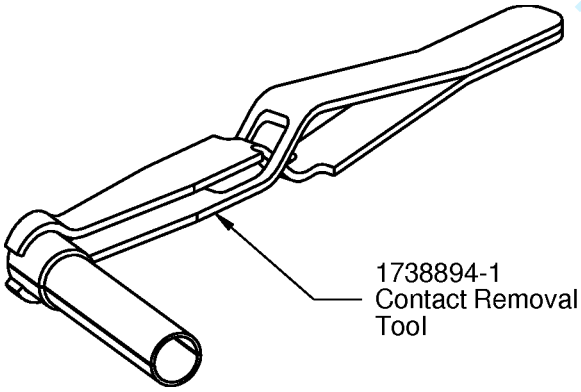

CONTACT REMOVAL TOOL
Figure 17

For training purposes only!

BOEING PROPRIETARY - Copyright © Unpublished Work - See title page for details

(1) Make a selection of a contact removal tool from Table 16.

CAUTION: DO NOT USE A REMOVAL TOOL THAT HAS A DEFECT. A REMOVAL TOOL THAT HAS A DEFECT CAN CAUSE DAMAGE TO THE CONTACT RETENTION CLIP IN THE CONNECTOR.

(2) Put the tip of the removal tool on the cable near the rear of the connector.

(3) Axially align the removal tool and the contact cavity.

(4) Carefully push the removal tool straight into the contact cavity until it stops.

(5) Carefully pull the cable and the removal tool straight out of the contact cavity at the same time.

(6) If the contact is not released:

(a) Pull the contact removal tool out of the contact cavity.

(b) Turn the removal tool approximately 90 degrees.

(c) Do Step (2) through Step (5) again.

3. CONNECTOR POLARIZATION

A. Connector Polarization

The polarization code of the connector part number identifies the position of:

- The polarization of the jackscrew on the plug connector
- The polarization of the jackpost on the receptacle connector.

Refer to Figure 18 and Figure 19.

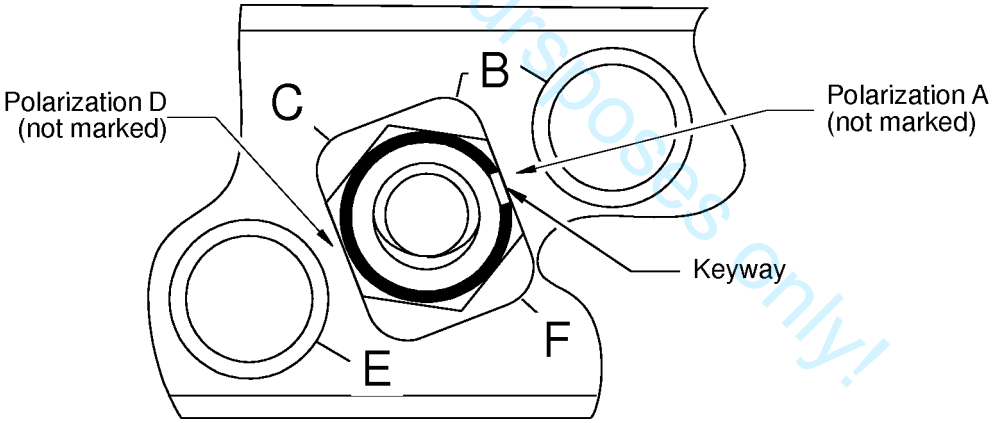

JACKSCREW POLARIZATION ON THE BACC65BC( ) PLUG CONNECTOR
Figure 18

For training purposes only!

BOEING PROPRIETARY - Copyright © Unpublished Work - See title page for details

ASSEMBLY OF BACC65BC AND BACC65BD CONNECTORS

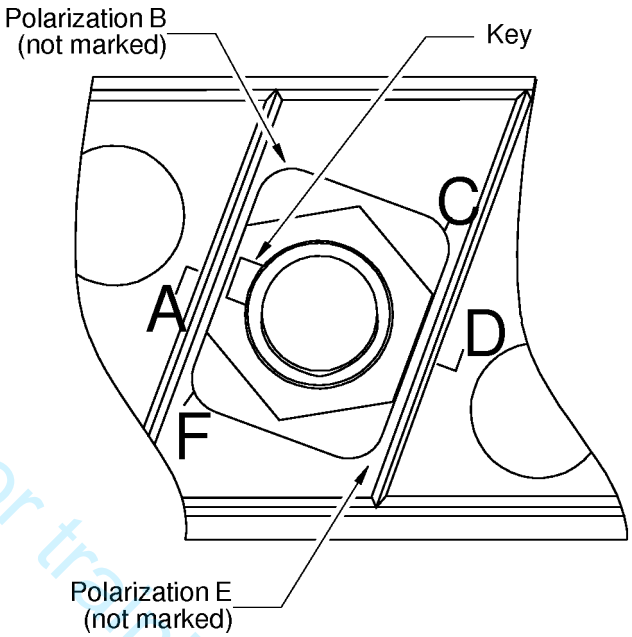

JACKPOST POLARIZATION ON THE BACC65BD( ) RECEPTACLE CONNECTOR
Figure 19

(1) Find the polarization code in the connector part number from the equipment list.

(2) For that code, find the correct position of:
- The jackscrew keyway on the plug
- The jackpost key on the receptacle.

(3) If the position of the jackscrew key way or the jackpost key do not agree with the code in the part number from the equipment list, put the jackscrew and jackpost into the correct position. Refer to Paragraph 3.B..

(4) If the polarization code in the part number on the connector does not agree with the polarization code in the part number from the equipment list, change the part number on the connector shell. Refer to Paragraph 3.D..

B. Change of the Jackscrew Polarization Keyway on the Plug Connector

NOTE: IF IT IS NECESSARY, CHANGE THE POLARIZATION OF THE BACC65BC( ) AND BACC65BD( ) CONNECTORS BEFORE THE BACKSHELLS ARE INSTALLED.

Table 17
POLARIZATION RETAINING PLATE TOOLS

Tool	Part Number	Supplier
Retention Nut Wrench	1604972-1	Tyco
Torque Tool	-	An available source

For training purposes only!

BOEING PROPRIETARY - Copyright © Unpublished Work - See title page for details

ASSEMBLY OF BACC65BC AND BACC65BD CONNECTORS

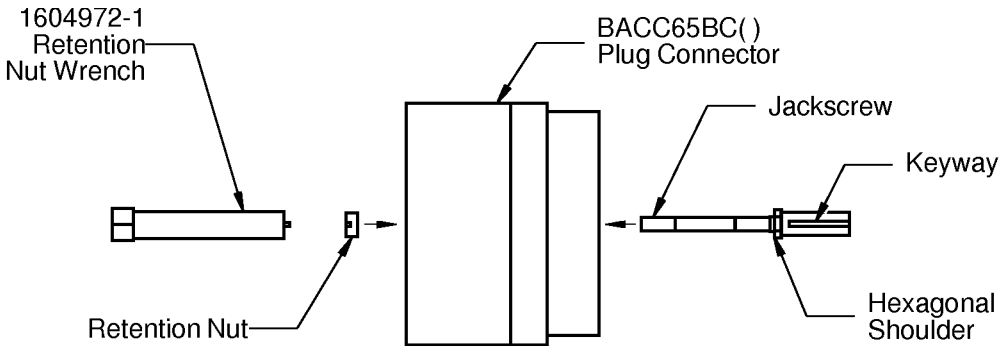

CHANGE OF THE JACKSCREW POLARIZATION KEYWAY
Figure 20

(1) Make a selection of these tools from Table 17:
- A retention nut wrench
- A torque tool.

(2) From the rear of the connector, remove the jackscrew retention nut. Refer to Figure 20.

(3) Put the polarization keyway in the correct position. Refer to Figure 18.

(4) From the front of the connector, push the jackscrew into the jackscrew hole until it stops. Make sure that the keyway is in the correct polarization position.

(5) From the rear of the connector, install the retention nut on the jackscrew.

(6) Torque the retention nut 10 inch-pounds ± 1 inch-pound.

C. Change of the Jackpost Polarization Key on the Receptacle Connector

NOTE: IF IT IS NECESSARY, CHANGE THE POLARIZATION OF THE BACC65BC( ) AND BACC65BD( ) CONNECTORS BEFORE THE BACKSHELLS ARE INSTALLED.

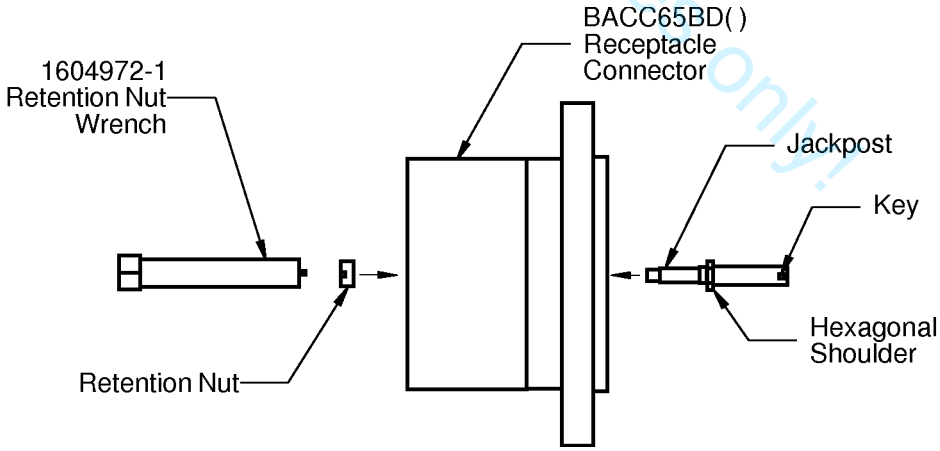

CHANGE OF THE JACKPOST KEY ON THE RECEPTACLE CONNECTOR
Figure 21

For training purposes only!

BOEING PROPRIETARY - Copyright © Unpublished Work - See title page for details

ASSEMBLY OF BACC65BC AND BACC65BD CONNECTORS

(1) Make a selection of these tools from Table 17:
- A retention nut wrench
- A torque tool.

(2) From the rear of the connector, remove the jackpost retention nut. Refer to Figure 21.

(3) Put the polarization key in the correct position. Refer to Figure 19.

(4) From the front of the connector, push the jackpost into the jackpost hole until it stops. Make sure that the key is in the correct polarization position.

(5) From the rear of the connector, install the retention nut on the jackpost.

(6) Torque the retention nut 10 inch-pounds ± 1 inch-pound.

D. Change of the Polarization Code in the Part Number on the Connector

Table 18
NECESSARY MATERIALS

Material	Part Number	Supplier
Ink	No. 68 Fast Dry	Independent
	No. 73X NW Opaque	Independent
	No. 73X Opaque	Independent
Paint, Clear	683-3-2	Akzo
	Clear Lacquer	Tartan
	EC-776	3M
	EC-776SR	3M
Permanent Ink Pen	13601	Sanford Sharpie
	13801	

For training purposes only!

BOEING PROPRIETARY - Copyright © Unpublished Work - See title page for details

ASSEMBLY OF BACC65BC AND BACC65BD CONNECTORS

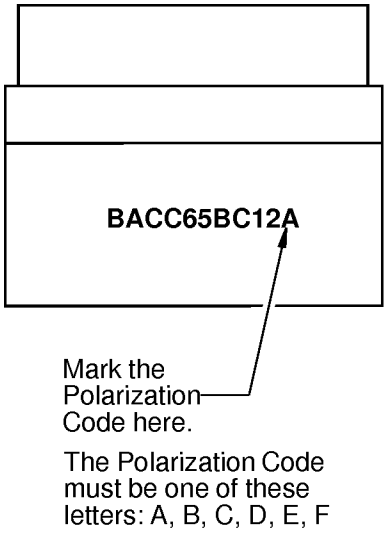

THE LOCATION TO MARK THE POLARIZATION CODE
Figure 22

(1) Make a selection of these materials from Table 18:
- An ink or a permanent ink pen
- A clear paint.

(2) If the polarization code in the part number on the connector is incorrect:
(a) Apply a layer of ink on the code on the connector shell.
Make sure that the code cannot be read.
(b) Write the new code on the connector shell adjacent to the layer of ink.

(3) If the part number on the connector does not have a polarization code, write the code on the connector shell at the end of the part number. Refer to Figure 22.

(4) Let the ink dry for a minimum of 10 minutes.

(5) Apply a layer of the clear paint on the part number on the connector shell.

CAUTION: DO NOT APPLY PAINT ON THE CONTACTS. PAINT ON THE SURFACE OF A CONTACT CAN CAUSE UNSATISFACTORY ELECTRICAL PERFORMANCE OF THE CONTACT.

(6) Let the paint dry before the connector shell is touched or moved.

4. CONNECTOR ASSEMBLY

A. Assembly of S280W554-113 Size 8 Coax Contacts

Table 19
SEAL BOOT

Part Number	Supplier
1811481-1	Tyco

For training purposes only.

BOEING PROPRIETARY - Copyright © Unpublished Work - See title page for details

ASSEMBLY OF BACC65BC AND BACC65BD CONNECTORS

Table 20
CENTER CONTACT CRIMP TOOLS

Coax Contact Size	Crimp Tool		
	Basic Unit		Locator
	Part Number	Setting	
8	M22520/2-01	5	K1025S

Table 21
OUTER CONTACT CRIMP TOOLS

Coax Contact Size	Crimp Tool		
	Basic Unit	Die	
		Part Number	Cavity
8	M22520/5-01	Y793A	A

(1) Make a selection of a center contact crimp tool from Table 20.

(2) Make a selection of an outer contact crimp tool from Table 21.

(3) Discard the seal boot that comes with the S280W554-113 contact.

NOTE: The seal boot that is included in the size 8 coax contact kit will not make a seal in a contact cavity that has a keyway.

(4) Put these components on the cable:
- The Tyco 1811481-1 seal boot
- The outer ferrule.

Refer to Figure 23.

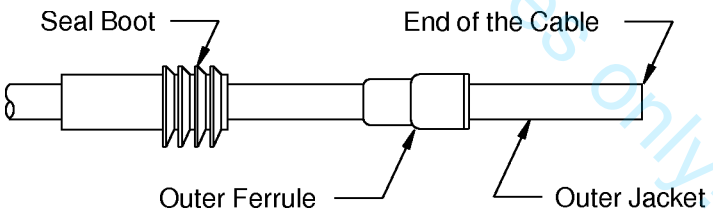

POSITION OF THE SEAL BOOT AND THE OUTER FERRULE ON THE CABLE
Figure 23

(5) Remove 0.62 inch ±0.02 inch of jacket from the end of the cable. Refer to Figure 24.

For training purposes only!

BOEING PROPRIETARY - Copyright © Unpublished Work - See title page for details

ASSEMBLY OF BACC65BC AND BACC65BD CONNECTORS

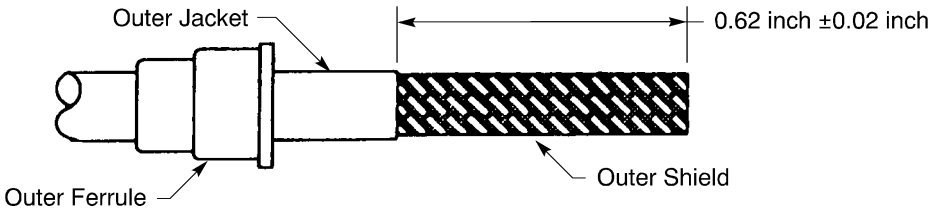

OUTER JACKET REMOVAL LENGTH
Figure 24

(6) Cut the outer round shield to make the distance from the end of the cable jacket to the end of the round shield equal to 0.20 inch ±0.02 inch.

Refer to Figure 25.

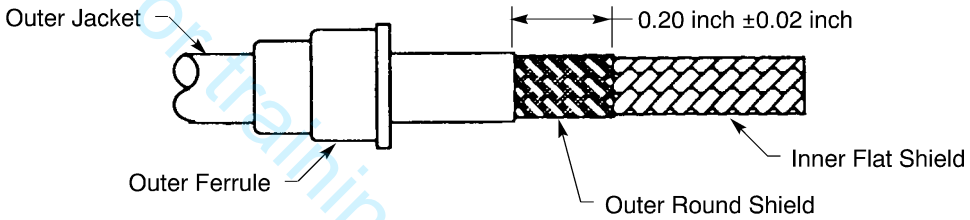

REMOVAL OF THE OUTER ROUND SHIELD
Figure 25

(7) Loosen the round shield and fold it back on the cable jacket.

(8) Cut the inner flat shield to align the edge of the shield with the edge of the folded back outer round shield. Refer to Figure 26.

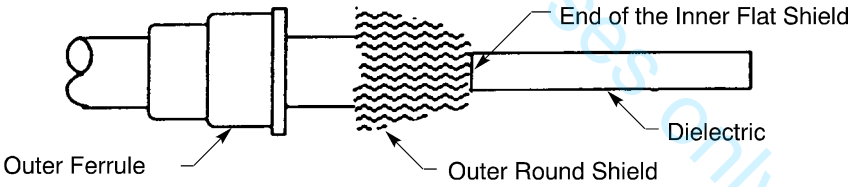

OUTER ROUND SHIELD FOLDED BACK
Figure 26

(9) Push the inner ferrule assembly rearward on the dielectric until it is against the edge of the round shield. Refer to Figure 27.

For training purposes only!

BOEING PROPRIETARY - Copyright © Unpublished Work - See title page for details

ASSEMBLY OF BACC65BC AND BACC65BD CONNECTORS

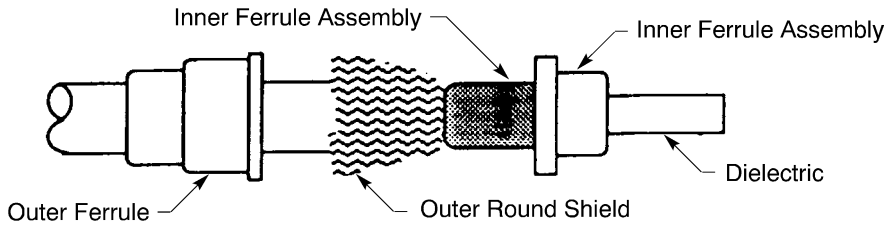

POSITION OF THE INNER FERRULE ASSEMBLY ON THE CABLE
Figure 27

(10) Remove the length of the dielectric between the end of the inner ferrule assembly and the end of the cable. Refer to Figure 28.

Make sure that the distance from the end of the dielectric to the edge of the inner ferrule assembly is not greater than 0.02 inch.

For training purposes only!

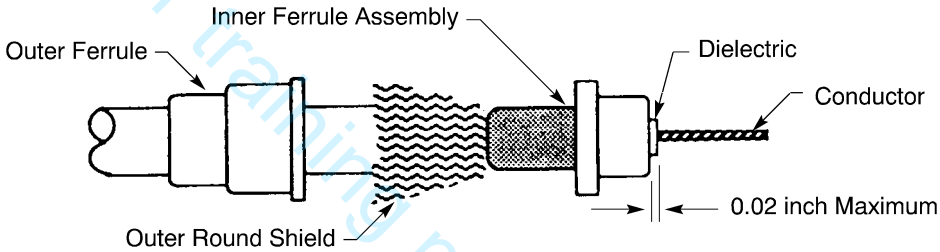

DIELECTRIC REMOVAL
Figure 28

(11) Put the conductor into the crimp barrel of the center contact.

Make sure that:

- All of the strands of the conductor are in the center contact
- The conductor can be seen in the inspection hole.

(12) Push the center contact rearward toward the outer ferrule until the inner ferrule assembly is against the outer round shield. Refer to Figure 29.

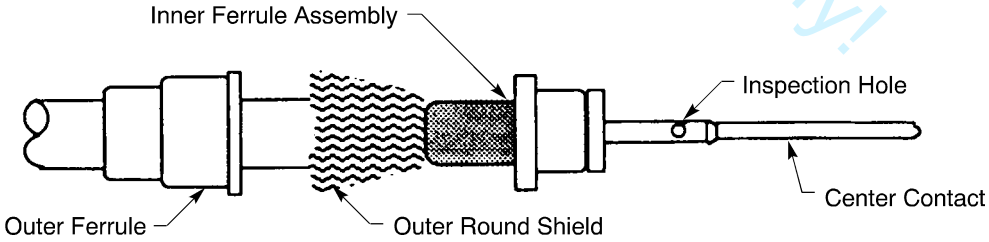

POSITION OF THE CENTER CONTACT ON THE CABLE
Figure 29

(13) Crimp the center contact.

(14) Symmetrically put the outer round shield around the inner ferrule assembly. Refer to Figure 30.

BOEING PROPRIETARY - Copyright © Unpublished Work - See title page for details

ASSEMBLY OF BACC65BC AND BACC65BD CONNECTORS

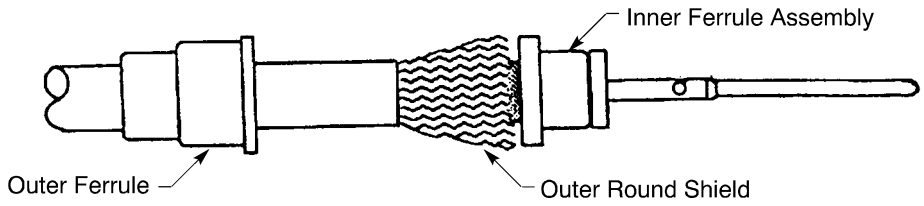

POSITION OF THE OUTER ROUND SHIELD ON THE INNER FERRULE ASSEMBLY
Figure 30

(15) Push the outer ferrule forward until it is against the inner ferrule assembly. Refer to Figure 31.

Make sure that the shield is between the outer ferrule and the inner ferrule assembly.

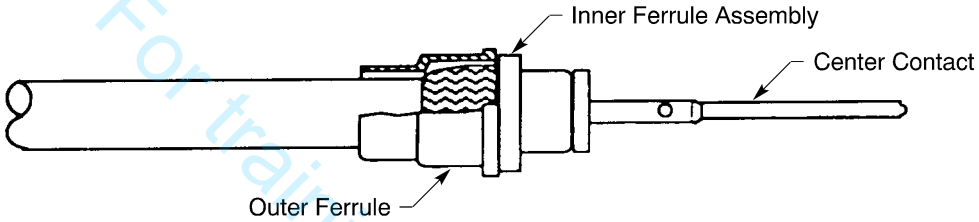

POSITION OF THE OUTER FERRULE AGAINST THE INNER FERRULE ASSEMBLY
Figure 31

(16) Remove the unwanted length of the shield strands.

Make sure that the end of the shield strands aligns with the rear edge of the shoulder of the inner ferrule assembly.

(17) Push the cable and the inner contact assembly into the outer contact assembly until it stops. Refer to Figure 32.

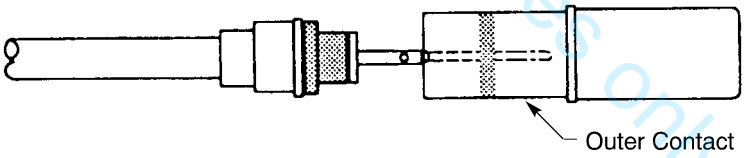

ALIGNMENT OF THE CENTER CONTACT AND THE OUTER CONTACT
Figure 32

(18) Apply pressure on the outer contact toward the outer and inner ferrule and crimp the outer contact. Refer to Figure 33.

Make sure that the outer contact is against the outer ferrule during the crimp operation.

For training purposes only

BOEING PROPRIETARY - Copyright © Unpublished Work - See title page for details

ASSEMBLY OF BACC65BC AND BACC65BD CONNECTORS

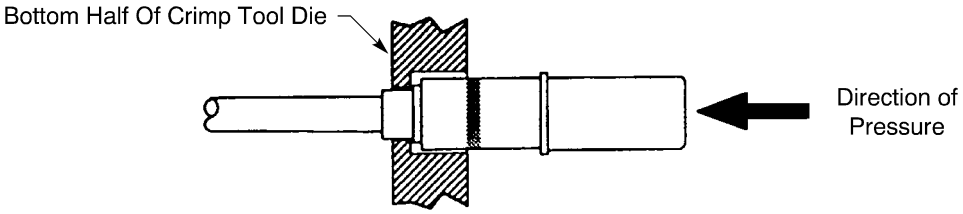

DIRECTION OF PRESSURE DURING THE CRIMP OPERATION
Figure 33

(19) Examine the crimp area of the outer contact.

Make sure that the length of the crimp area on the outer contact is 0.09 inch or longer. Refer to Figure 34.

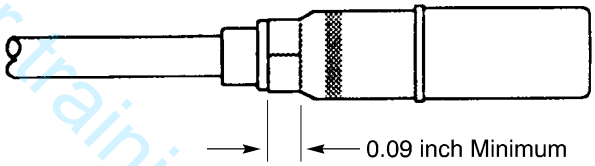

CRIMP AREA OF THE OUTER CONTACT
Figure 34

(20) Push the seal boot and cable support assembly toward the contact assembly until it stops. Refer to Figure 35.

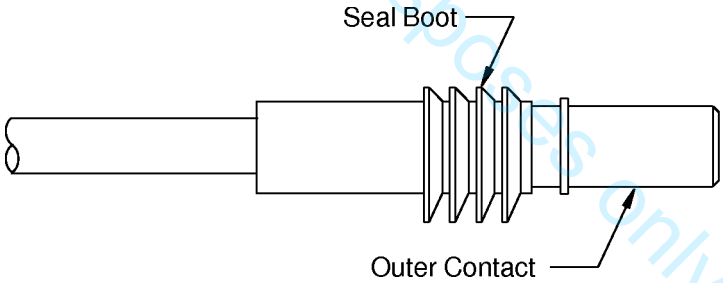

POSITION OF THE SEAL BOOT AGAINST THE CONTACT ASSEMBLY
Figure 35

B. Assembly of Tyco 1757624-1 and 1883369-2 Size 8 Coax Contacts to BMS 13-65 Type 0F Coax Cable

Table 22
CENTER CONTACT CRIMP TOOLS

Coax Contact	Crimp Tool		
	Basic Unit		Locator
	Part Number	Setting	
1757624-1	M22520/2-01	5	M22520/2-06
1883369-2	M22520/2-01	5	NONE

BOEING PROPRIETARY - Copyright © Unpublished Work - See title page for details
For training purposes only!

Table 23
OUTER CONTACT CRIMP TOOLS

Coax Contact	Crimp Tool		
	Basic Unit	Die	
		Part Number	Cavity
1757624-1	M22520/5-01	M22520/5-45	B
1883369-2	M22520/5-01	M22520/5-45	B

(1) Make a selection of a center contact crimp tool from Table 22.

(2) Make a selection of an outer contact crimp tool from Table 23.

(3) Put the seal boot on the cable. Refer to Figure 36.

Make sure that the larger end of the seal boot points to the end of the cable.

(4) Make a selection of a 3/16 inch diameter Grade B, Class 1 heat shrinkable sleeve from Subject 20-00-11.

(5) Put a 0.5 inch ±0.05 inch length of the heat shrinkable sleeve on the cable.

(6) Remove 0.60 inch ±0.03 inch of jacket from the end of the cable.

(7) Shrink the sleeve into its position. Refer to Figure 36.

Make sure that the distance from the end of the cable jacket to the end of the sleeve is 0.33 inch ±0.03 inch.

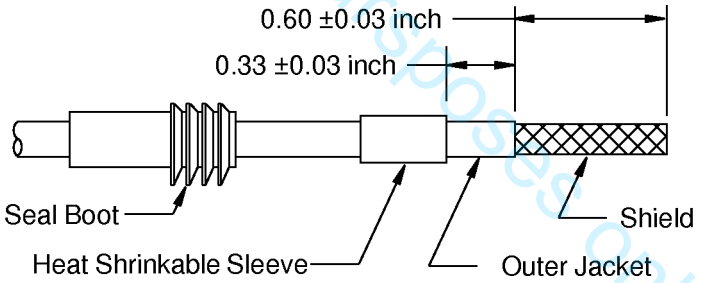

POSITION OF THE SEAL BOOT AND THE HEAT SHRINKABLE SLEEVE ON THE CABLE
Figure 36

(8) Put the ferrule on the cable. Refer to Figure 37.

Make sure that:

- The smaller end of the the ferrule points to the end of the cable
- The end of the ferrule and the end of the cable outer jacket are aligned.

For training purposes only!

BOEING PROPRIETARY - Copyright © Unpublished Work - See title page for details

ASSEMBLY OF BACC65BC AND BACC65BD CONNECTORS

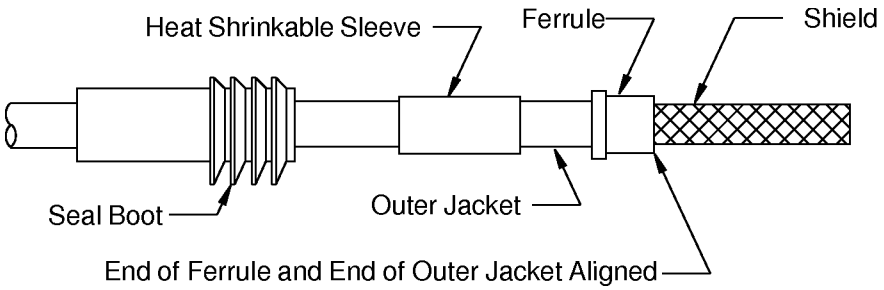

POSITION OF THE FERRULE ON THE CABLE
Figure 37

(9) Loosen the strands of the round shield and fold the round shield back on the ferrule. Refer to Figure 38.

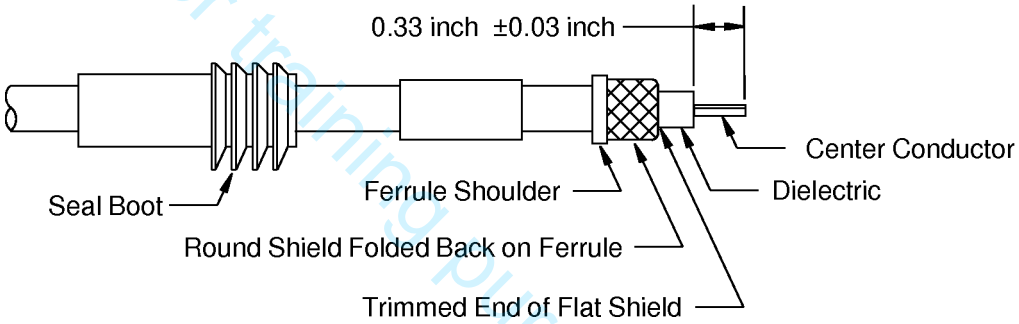

ROUND SHIELD FOLDED BACK ON THE FERRULE
Figure 38

(10) Remove the unwanted length of the round shield strands that extend rearward of the forward edge of the shoulder of the ferrule. Refer to Figure 38.

(11) Cut the inner flat shield to align the trimmed end of the flat shield and the edge of the folded back round shield. Refer to Figure 38.

(12) Remove 0.33 inch ±0.03 inch of the insulation from the end of the center conductor.

(13) Put the center conductor into the crimp barrel of the center contact. Refer to Figure 39.

Make sure that:

- All of the strands of the center conductor are in the crimp barrel of the center contact
- The conductor can be seen in the inspection hole.

For training purposes only!

BOEING PROPRIETARY - Copyright © Unpublished Work - See title page for details

ASSEMBLY OF BACC65BC AND BACC65BD CONNECTORS

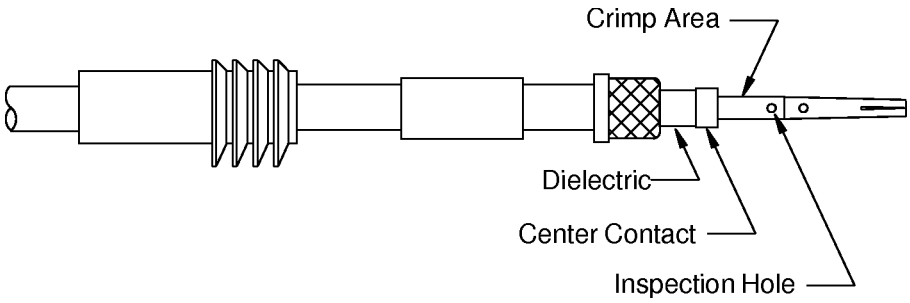

POSITION OF THE CENTER CONTACT ON THE CENTER CONDUCTOR
Figure 39

(14) Crimp the center contact.

Make sure that:

- All of the strands of the conductor are in the crimp barrel of the center contact
- The conductor can be seen in the inspection hole.

(15) Push the cable and the center contact assembly into the outer contact until it stops. Refer to Figure 40.

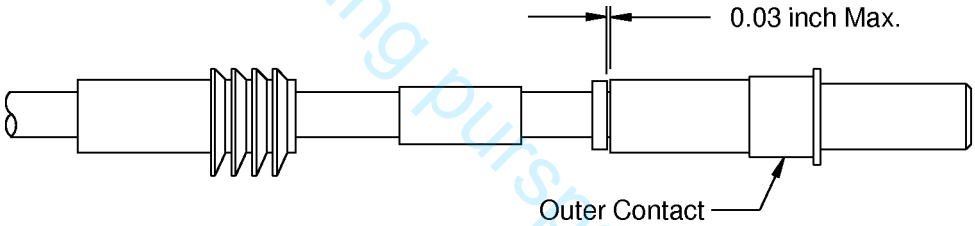

COAX CONTACT ASSEMBLY
Figure 40

(16) Hold the contact assembly together, and at the same time, crimp the outer contact.

Make sure that the distance from the shoulder of the inner ferrule to the edge of the outer contact crimp barrel is less than 0.03 inch. Refer to Figure 40.

(17) Remove the unwanted shield strands that come out from between the outer contact crimp barrel and the shoulder of the ferrule.

(18) Push the seal boot to the contact assembly until it stops.

C. Assembly of Size 8 BACC47GA1 and BACC47GB1 Quadrax Contacts

Table 24
QUADRAX CONTACT INNER CONTACT CRIMP TOOLS

Quadrax Contact	Crimp Tool		
	Basic Unit		Locator
	Part Number	Setting	Part Number
BACC47GA1	M22520/2-01	5	K709
BACC47GB1	M22520/2-01	5	K709

For training purposes only!

BOEING PROPRIETARY - Copyright © Unpublished Work - See title page for details

Table 25
QUADRAX CONTACT OUTER CONTACT CRIMP TOOLS

Quadrax Contact	Crimp Tool		
	Basic Unit	Die	
		Part Number	Cavity
BACC47GA1	M22520/5-01	M22520/5-45	B
BACC47GB1	M22520/5-01	M22520/5-45	B

(1) Make a selection of an inner contact crimp tool from Table 24.

(2) Make a selection of an outer contact crimp tool from Table 25.

(3) Cut the cable perpendicular to its longitudinal axis.

(4) Put the seal boot on the cable. Refer to Figure 41.

Make sure that the end of the seal boot that has the smaller diameter points rearward, away from the end of the cable.

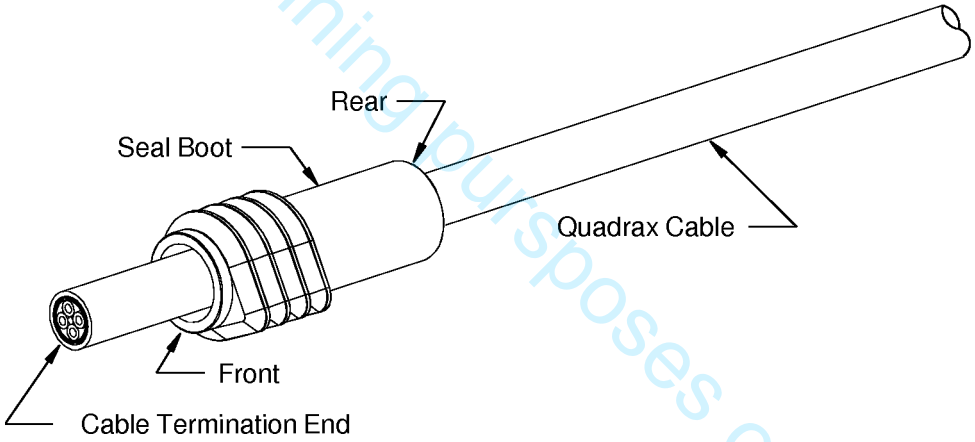

THE SEAL BOOT ON THE CABLE
Figure 41

(5) Move the seal boot away from the end of the cable.

(6) Prepare the end of the cable. Refer to Figure 42.

For training purposes only!

BOEING PROPRIETARY - Copyright © Unpublished Work - See title page for details

ASSEMBLY OF BACC65BC AND BACC65BD CONNECTORS

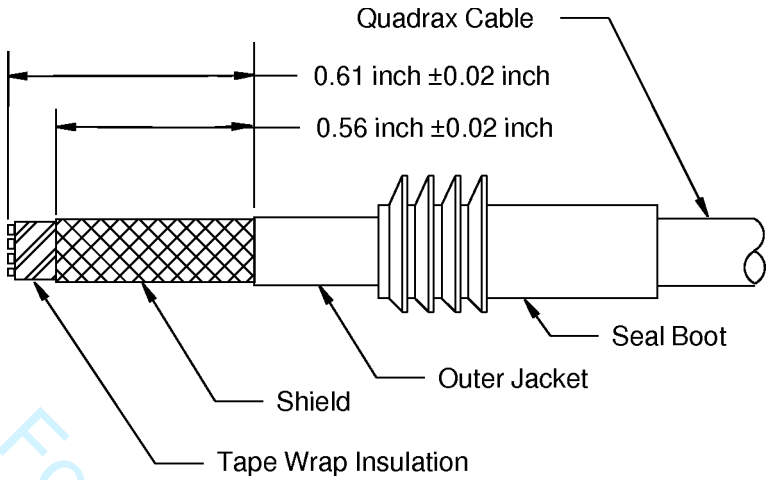

QUADRAX CABLE TRIM DIMENSIONS
Figure 42

(a) Remove 0.61 inch ±0.02 inch of the outer jacket from the end of the cable.

(b) Remove the necessary length of the shield from the end of the cable to make the distance from the end of the outer jacket to the end of the shield equal to 0.56 inch ±0.02 inch.

(7) Put the ferrule on the cable. Refer to Figure 43.

Make sure that the end of the ferrule that has the smaller diameter is pointed forward toward the end of the cable.

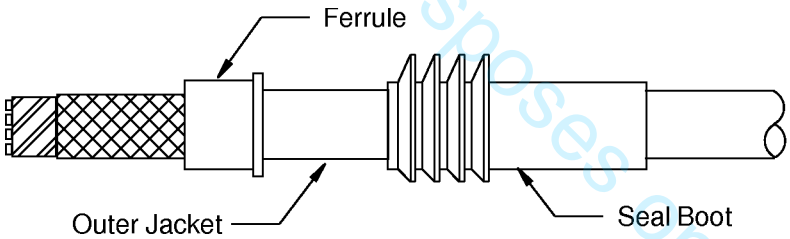

POSITION OF THE FERRULE ON THE CABLE
Figure 43

(8) Push the ferrule rearward until it is against the end of the outer jacket. Refer to Figure 43.

(9) Fold the outer round shield back on the ferrule. Refer to Figure 44.

For training purposes only!

BOEING PROPRIETARY - Copyright © Unpublished Work - See title page for details

ASSEMBLY OF BACC65BC AND BACC65BD CONNECTORS

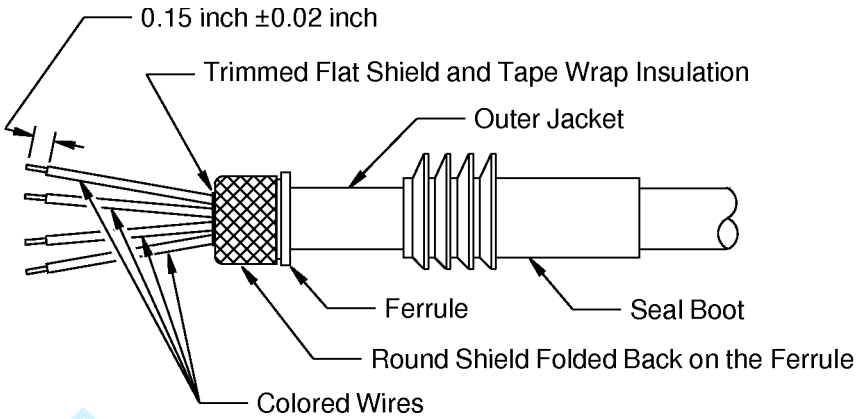

COLORED WIRE INSULATION REMOVAL LENGTH AND SHIELD PREPARATION
Figure 44

For training purposes only.

(10) Remove the necessary length of the inner flat shield and the tape wrap insulation.

Make sure that the ends of the flat shield and the tape wrap are approximately aligned with the front end of the ferrule.

(11) Move the four colored wires apart.

Make sure that:

- The colored wires do not cross each other
- The initial positions of the colored wires in the cable is not changed.

(12) Remove the necessary length of the filler rods in the cable.

Make sure that the ends of the filler rods are approximately aligned with the front end of the ferrule.

(13) Remove 0.15 inch ±0.02 inch of insulation from the end of each of the four colored wires.

Refer to:

- Figure 44.
- Subject 20-00-15 for the procedure to remove the wire insulation.

(14) Crimp an inner contact on the conductor of each of the four colored wires.

Make sure that:

- The distance on each conductor between the end of the wire insulation and the end of the inner contact crimp barrel is 0.02 inch maximum
- The wire insulation is not in the crimp barrel
- The conductor strands can be seen in the inspection hole
- All conductor strands are in the crimp barrel
- The conductor strands do not go out of the inspection hole
- The plating of each inner contact is not removed
- The inner contacts have no cracks.

(15) Put the inner contacts into the larger end of the insulator.

BOEING PROPRIETARY - Copyright © Unpublished Work - See title page for details

ASSEMBLY OF BACC65BC AND BACC65BD CONNECTORS

Refer to:

- Figure 45,
- Figure 46,
- Figure 47, and
- Figure 48.

Make sure that:

- The insulator keyway is between the red wire and the yellow wire
- The position of the colored wires in the insulator is the same as the position of the colored wires in the cable
- The colored wires do not cross each other
- Each inner contact is fully installed in the insulator.

NOTE: All four of the wire color position configurations in Figure 47 and Figure 48 are correct. Only one of these configurations is possible at each end of the quadrax cable.

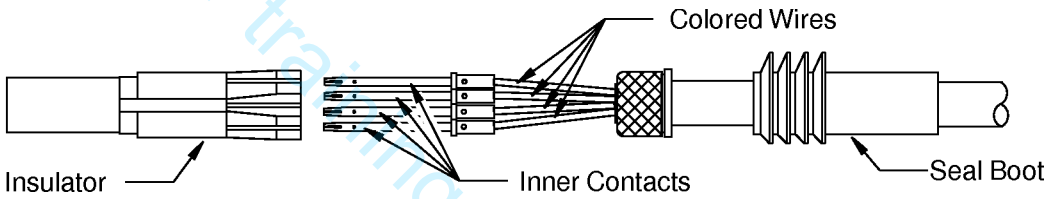

INSTALLATION OF THE INNER CONTACTS IN THE INSULATOR
Figure 45

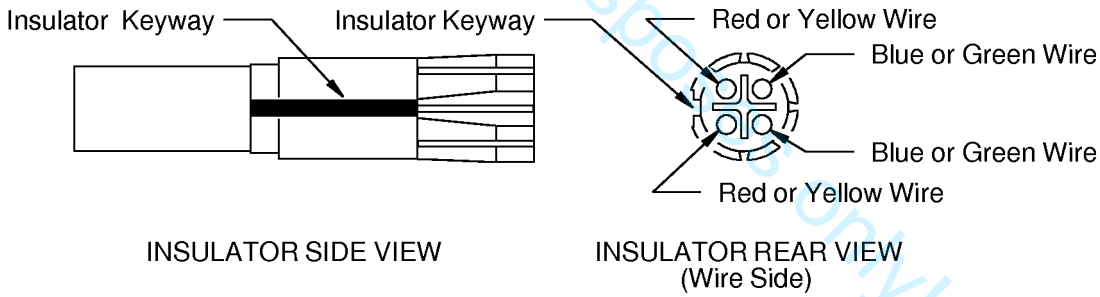

CORRECT CONFIGURATIONS OF THE COLORED WIRES IN THE INSULATOR
Figure 46

For training purposes only!

BOEING PROPRIETARY - Copyright © Unpublished Work - See title page for details

ASSEMBLY OF BACC65BC AND BACC65BD CONNECTORS

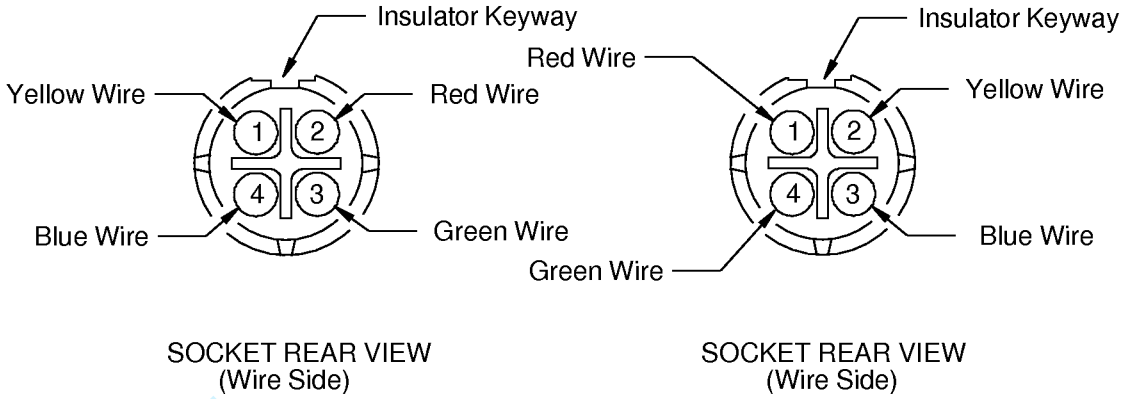

CORRECT CONFIGURATIONS OF THE COLORED WIRES IN THE BACC47GB SOCKET INSULATOR
Figure 47

For training purposes only!

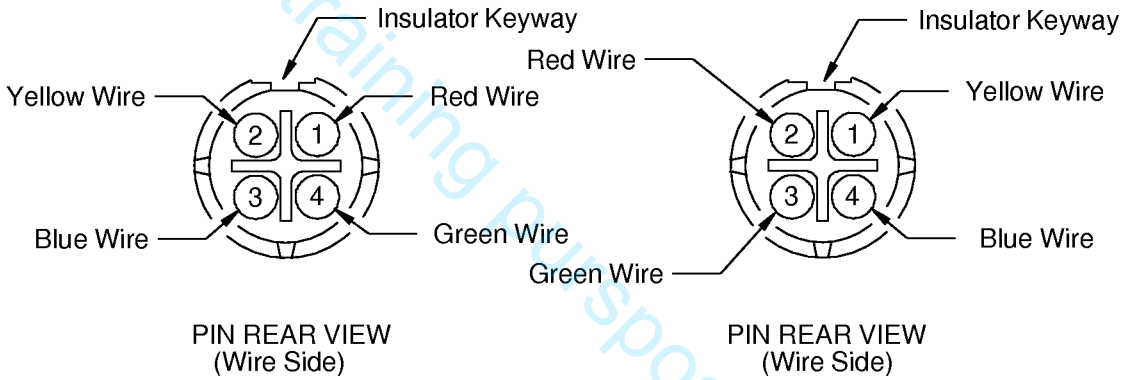

CORRECT CONFIGURATIONS OF THE COLORED WIRES IN THE BACC47GA PIN INSULATOR
Figure 48

(16) Align the key on the outer contact and the insulator keyway. Refer to Figure 49.

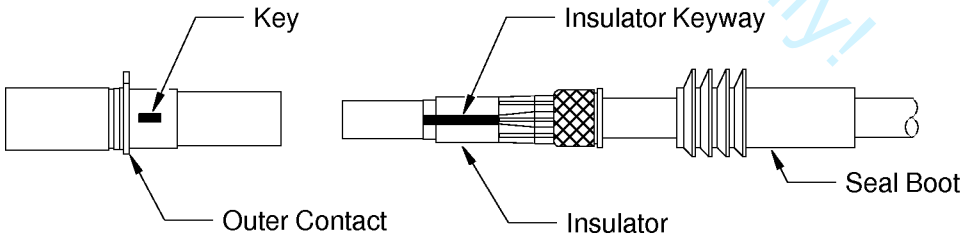

ALIGNMENT OF THE OUTER CONTACT AND THE INSULATOR ASSEMBLY
Figure 49

(17) Push the insulator assembly into the outer contact until it stops. Refer to Figure 50.

BOEING PROPRIETARY - Copyright © Unpublished Work - See title page for details

ASSEMBLY OF BACC65BC AND BACC65BD CONNECTORS

Make sure that:

- The key on the outer contact and the insulator keyway are aligned
- The rear of the insulator is against the shield that is folded back on the ferrule
- The distance from the rear edge of the outer contact to the shoulder of the ferrule is not more than 0.02 inch
- The distance from the rear end of the ferrule to the end of the cable jacket is not more than 0.02 inch.

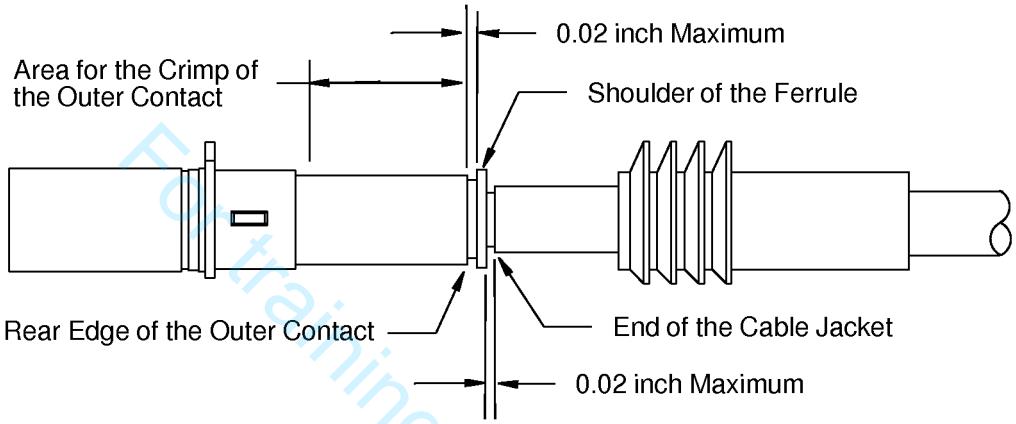

QUADRAX CONTACT ASSEMBLY
Figure 50

(18) Crimp the outer contact. Refer to Figure 50.

(19) Remove all of the strands of the shield that are between the rear edge of the outer contact and the shoulder of the ferrule.

D. Installation of Size 8 Coax Contacts and Size 8 Quadrax Contacts

NOTE: Change the polarization of the BACC65BC( ) and BACC65BD( ) connectors before the backshells are installed.

Refer to paragraph 3.A..

NOTE: Install the 2 contact cavity BACC10MD1 backshell on the cable before contact insertion. Refer to Paragraph 4.D..

NOTE: Install the 12 contact cavity BACC10MC1 and BACC10MC2 backshells after contact insertion.

NOTE: Install seal plugs in empty contact cavities before or after contact insertion. Refer to Paragraph 4.E..

Table 26
LUBRICANTS

Lubricant	Specification	Supplier
Alcohol, Isopropyl	TT-I-735	An available source

BOEING PROPRIETARY - Copyright © Unpublished Work - See title page for details
For training purposes only!

ASSEMBLY OF BACC65BC AND BACC65BD CONNECTORS

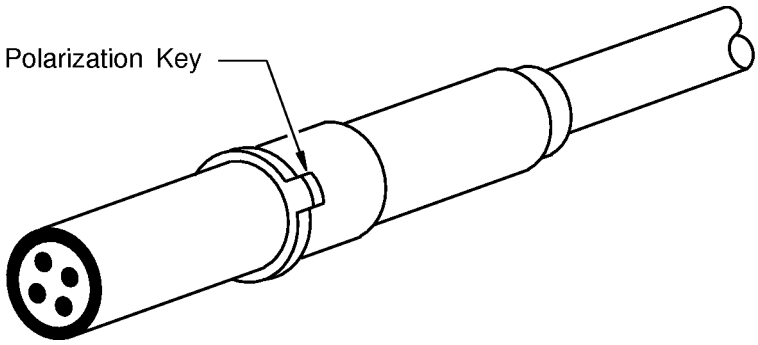

POLARIZATION KEY OF THE QUADRAX CONTACT
Figure 51

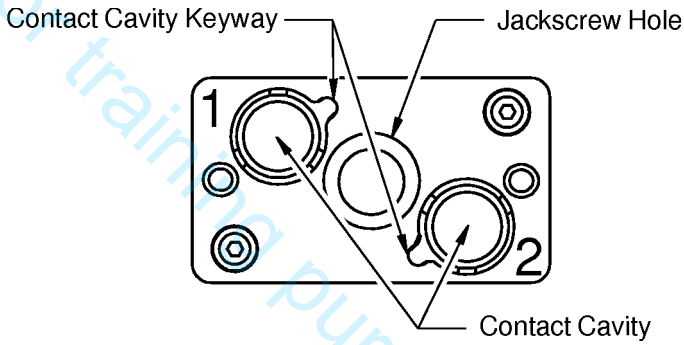

VIEW OF THE REAR FACE OF THE BACC65BC2( ) PLUG CONNECTOR
Figure 52

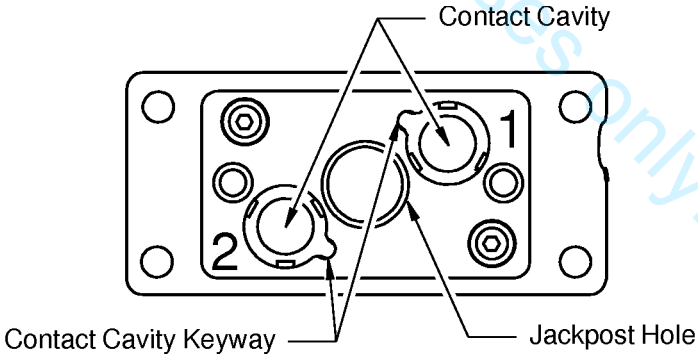

VIEW OF THE REAR FACE OF THE BACC65BD2( ) RECEPTACLE CONNECTOR
Figure 53

For training purposes only!

BOEING PROPRIETARY - Copyright © Unpublished Work - See title page for details

ASSEMBLY OF BACC65BC AND BACC65BD CONNECTORS

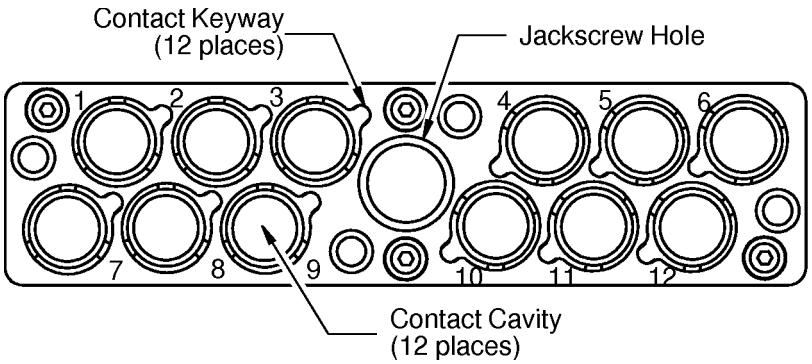

VIEW OF THE REAR FACE OF THE BACC65BC12( ) PLUG CONNECTOR
Figure 54

For training purposes only.

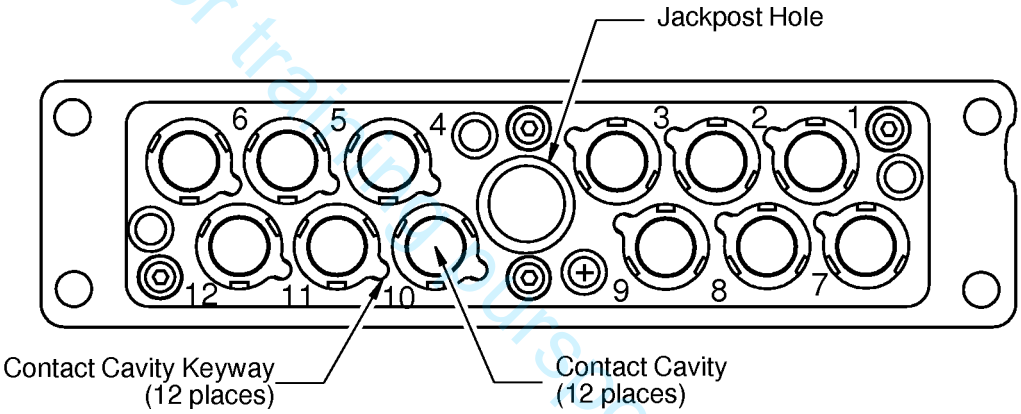

VIEW OF THE REAR FACE OF THE BACC65BD12( ) RECEPTACLE CONNECTOR
Figure 55

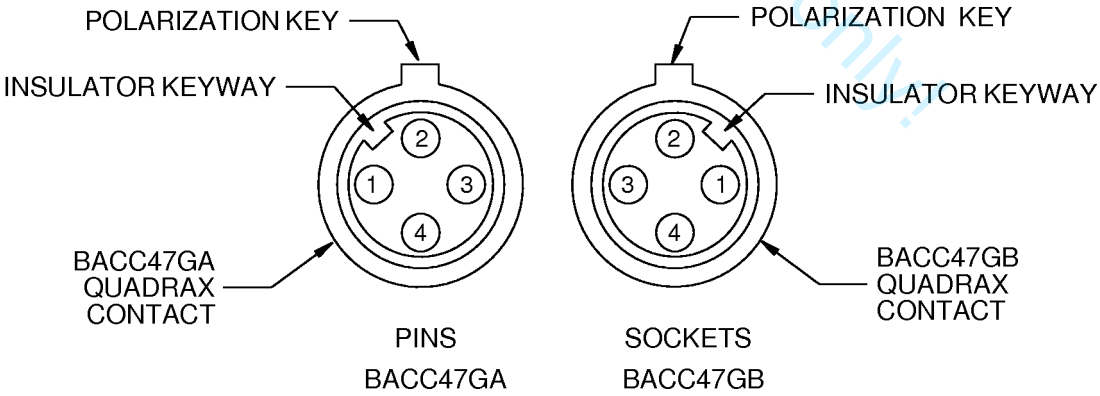

QUADRAX INNER CONTACT IDENTIFICATION NUMBERS - ENGAGING FACE OF THE CONNECTOR
Figure 56

BOEING PROPRIETARY - Copyright © Unpublished Work - See title page for details

ASSEMBLY OF BACC65BC AND BACC65BD CONNECTORS

(1) For the BACC65BC2( ) and BACC65BD2( ) connectors that have 2 contact cavities, put the backshell on the cable before you install the contacts. Refer to Figure 57.

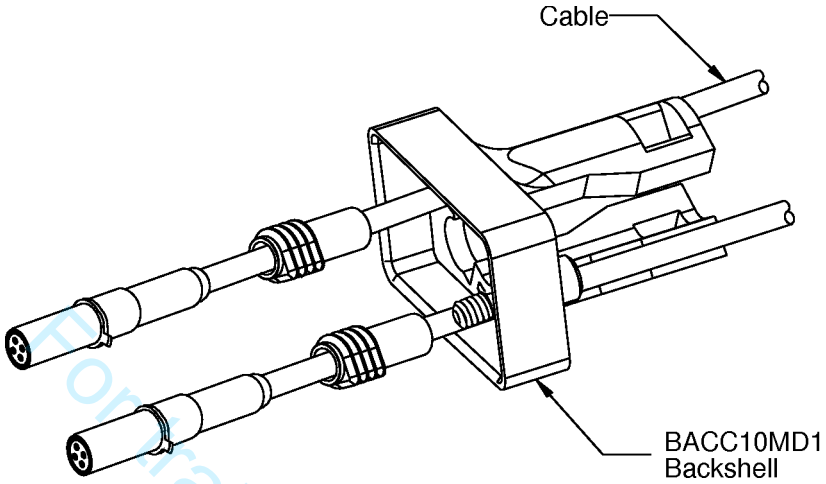

THE BACC10MD1 BACKSHELL ON THE CABLE
Figure 57

NOTE: The backshells for the connectors that have 12 contact cavities are installed after the contacts are installed.

(2) Install the contacts into the contact cavities on the rear face of the connector.

(a) For the size 8 quadrax contact:

- Axially align the contact with the contact cavity at the rear of the connector
- Align the contact keyway with the contact cavity keyway.

Refer to:

- Figure 51 for the polarization key of the quadrax contact
- Figure 52, 53, 54 and 55 for the keyway of the quadrax contact cavity.

(b) For the size 8 coax contact, axially align the contact with the contact cavity at the rear of the connector.

NOTE: The coax contact does not have a polarization key.

Make sure that the longitudinal axis of the contact assembly is perpendicular to the rear face of the connector.

(3) Push the contact into the contact cavity until the contact stops and is locked.

Make sure that the contact stays axially aligned with the contact cavity.

NOTE: A lubricant can be used to make it easier to push the contact into the contact cavity. Refer to Table 26.

(4) Align the seal boot key with the contact cavity keyway. Refer to Figure 58.

For training purposes only!

BOEING PROPRIETARY - Copyright © Unpublished Work - See title page for details

ASSEMBLY OF BACC65BC AND BACC65BD CONNECTORS

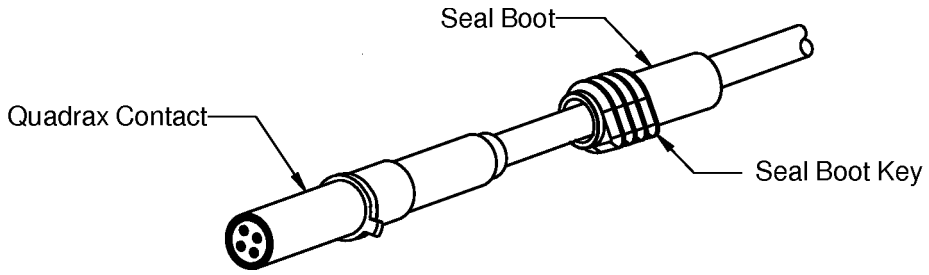

THE LOCATION OF THE SEAL BOOT KEY
Figure 58

(5) Push the seal boot into the contact cavity.

Make sure that the rear edge of the seal boot key is aligned with athe rear face of the connector.

NOTE: A lubricant can be used to make it easier to push the seal boot into the contact cavity. Refer to Table 26.

(6) Lightly pull on the cable.

Make sure that the contact is locked in the contact cavity.

CAUTION: DO NOT PULL THE WIRE WITH A STRONG OR A SUDDEN FORCE. THE FORCE CAN CAUSE DAMAGE TO THE CONNECTOR OR THE CONTACT.

CAUTION: DO NOT MAKE A DENT IN THE WIRE INSULATION WITH THE FINGERNAILS. DAMAGE TO THE WIRE INSULATION CAN CAUSE UNSATISFACTORY PERFORMANCE OF THE WIRE.

(7) If the contact is not locked in the contact cavity:

(a) Pull the contact assembly out of the contact cavity.

(b) Do Step (7) through Step (6) again.

E. Seal of an Empty Contact Cavity

NOTE: Install seal plugs before the backshell is installed.

NOTE: Install seal plugs before or after the contacts are installed.

Table 27
SEAL PLUGS

Part Number	Supplier
1604872-2	Tyco

For training purposes only!

BOEING PROPRIETARY - Copyright © Unpublished Work - See title page for details

ASSEMBLY OF BACC65BC AND BACC65BD CONNECTORS

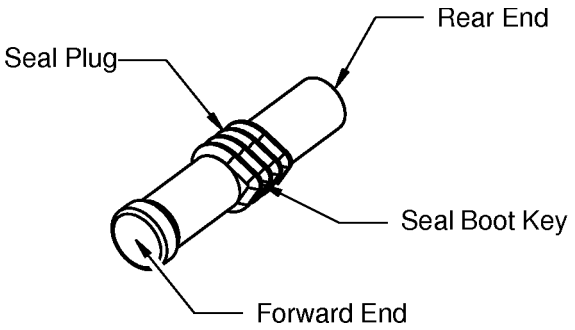

SEAL PLUG
Figure 59

(1) Put seal plugs in the contact cavities that do not have contacts in them.

Make sure that:

- The seal plug key is aligned with the contact cavity keyway
- The forward end of the seal plug goes in first
- The rear end of the seal plug is flush with the rear face of the connector. Refer to Figure 59.

F. Installation of the BACC10MC(), BACC10MD(), and BACC10NJ() Backshells

NOTE: The BACC10MD1 backshell must be put on the cable before the contacts are installed. Refer to Paragraph 4.D..

NOTE: The polarization of the connector must be changed before the backshell is installed.

Table 28
BACKSHELL INSTALLATION TOOLS

Tool	Type	Size (inch)
Wrench	Torque	-
Driver	Hex	7/64

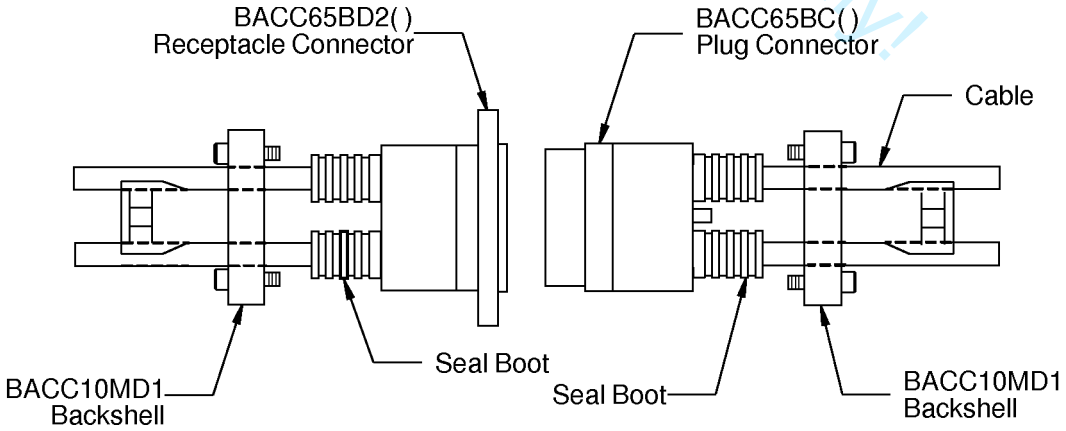

INSTALLATION OF THE BACC10MD1 BACKSHELL
Figure 60

BOEING PROPRIETARY - Copyright © Unpublished Work - See title page for details
For training purposes only!

ASSEMBLY OF BACC65BC AND BACC65BD CONNECTORS

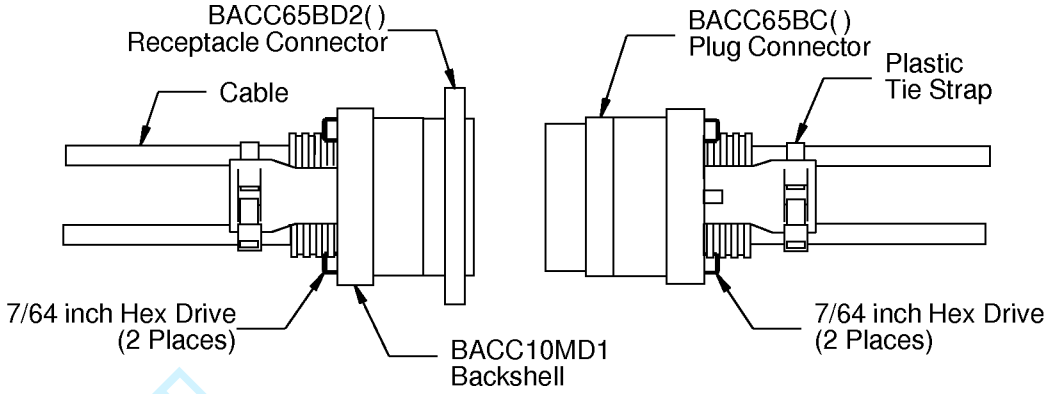

COMPLETED INSTALLATION OF THE BACC10MD1 BACKSHELL
Figure 61

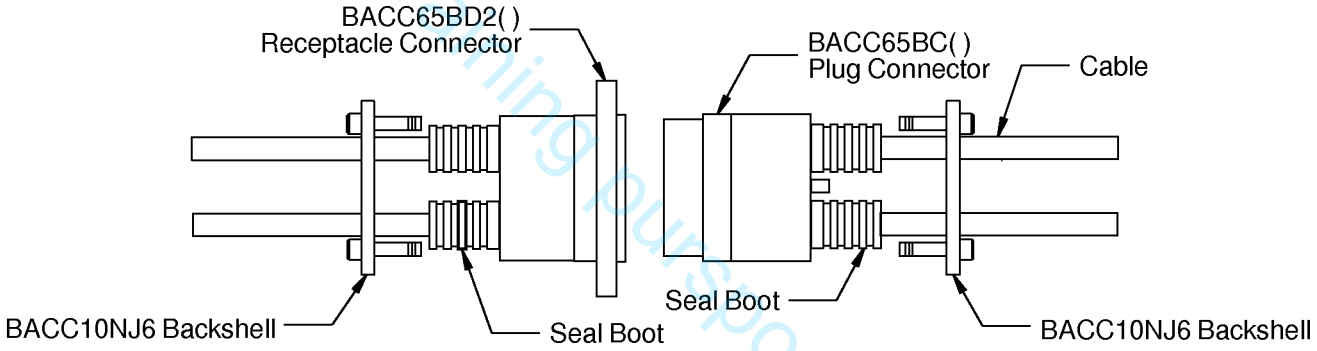

INSTALLATION OF THE BACC10NJ6 BACKSHELL
Figure 62

For training purposes only!

BOEING PROPRIETARY - Copyright © Unpublished Work - See title page for details

ASSEMBLY OF BACC65BC AND BACC65BD CONNECTORS

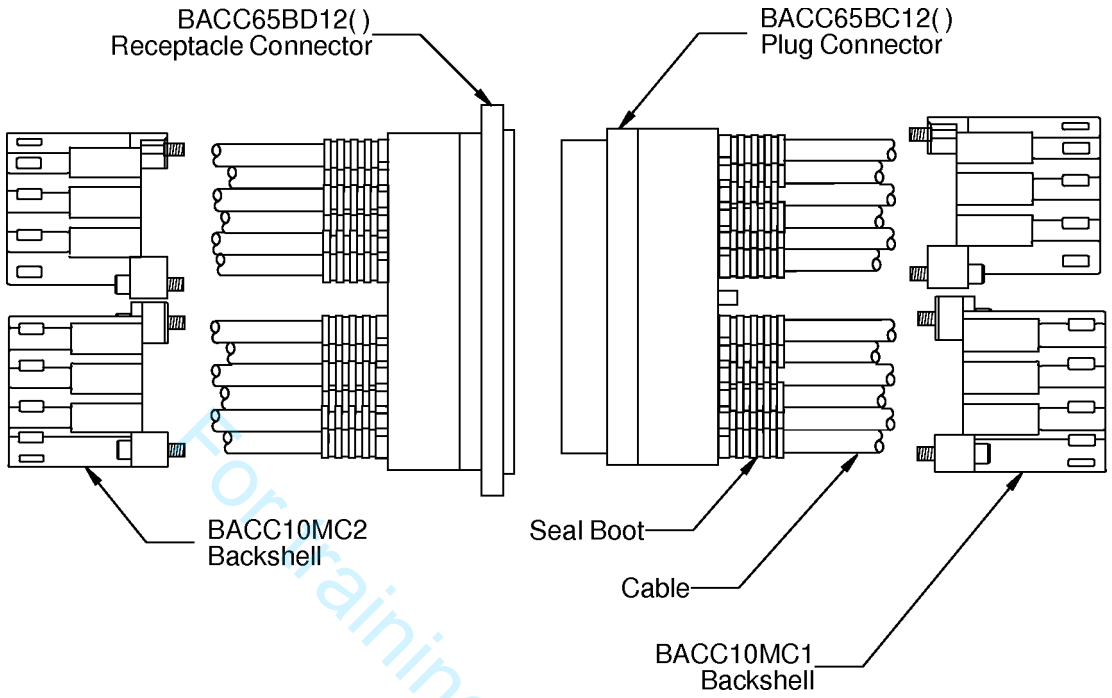

INSTALLATION OF THE BACC10MC1 AND BACC10MC2 BACKSHELLS
Figure 63

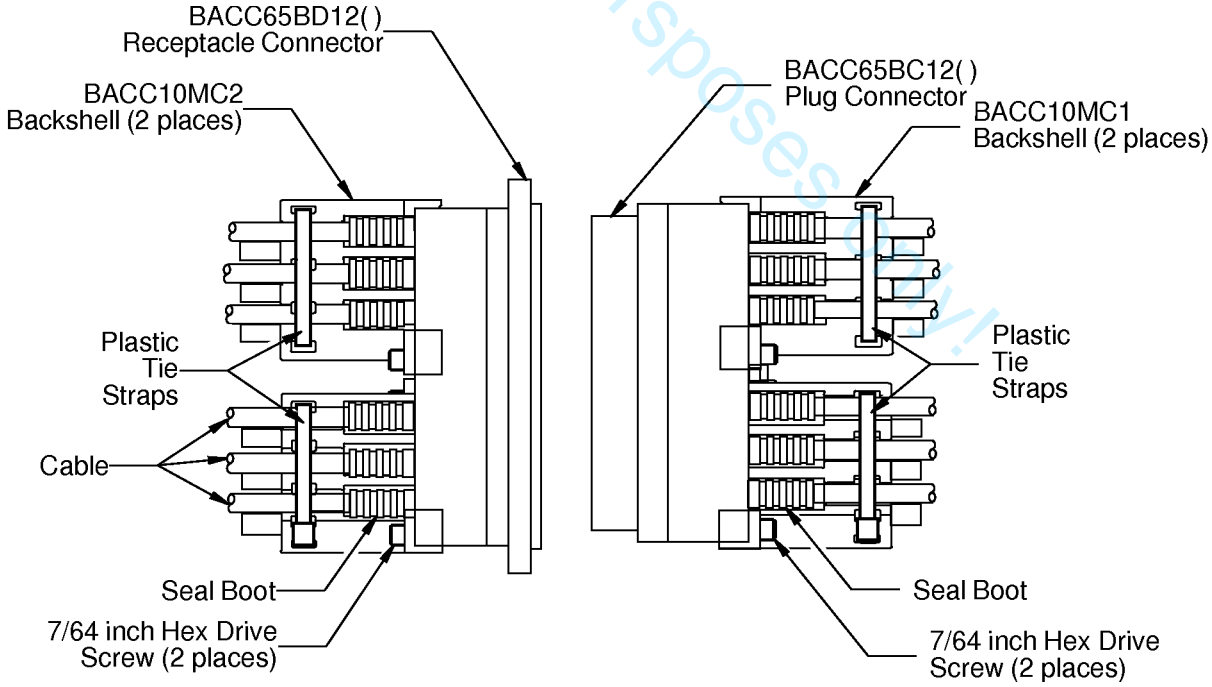

COMPLETED INSTALLATION OF THE BACC10MC1 AND BACC10MC2 BACKSHELLS
Figure 64

For training purposes only!

BOEING PROPRIETARY - Copyright © Unpublished Work - See title page for details

ASSEMBLY OF BACC65BC AND BACC65BD CONNECTORS

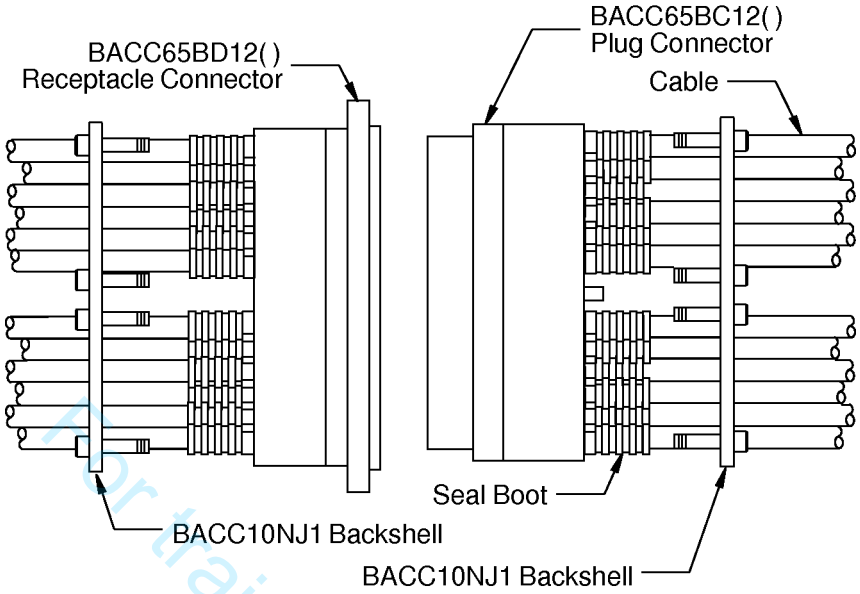

INSTALLATION OF THE BACC10NJ1 BACKSHELL
Figure 65

(1) Make a selection of these tools from Table 28:
- A torque tool
- A driver.

(2) Engage the threads of the backshell installation screws with the screw holes in the connector.

(3) Torque each installation screw 10 inch-pounds ±1 inch-pound.

(4) If the backshell is a BACC10MC or a BACC10MD, assemble a plastic tie strap on the backshell. Refer to Subject 20-10-11.

5. CONNECTOR INSTALLATION

A. Installation of the Receptacle

Table 29
RECEPTACLE INSTALLATION FASTENERS

Fastener	Part Number	Supplier
Screw	BACS12HN06U( )	QPL

Table 30
NECESSARY TOOLS

Tool	Type	Size (inch)
Driver	Phillips Head Screwdriver	-
	Socket Wrench	1/4

For training purposes only!

BOEING PROPRIETARY - Copyright © Unpublished Work - See title page for details

ASSEMBLY OF BACC65BC AND BACC65BD CONNECTORS

Table 30 (continued)

Tool	Type	Size (inch)
Torque	Phillips Head Torque Screwdriver	-
	Socket Torque Wrench	1/4

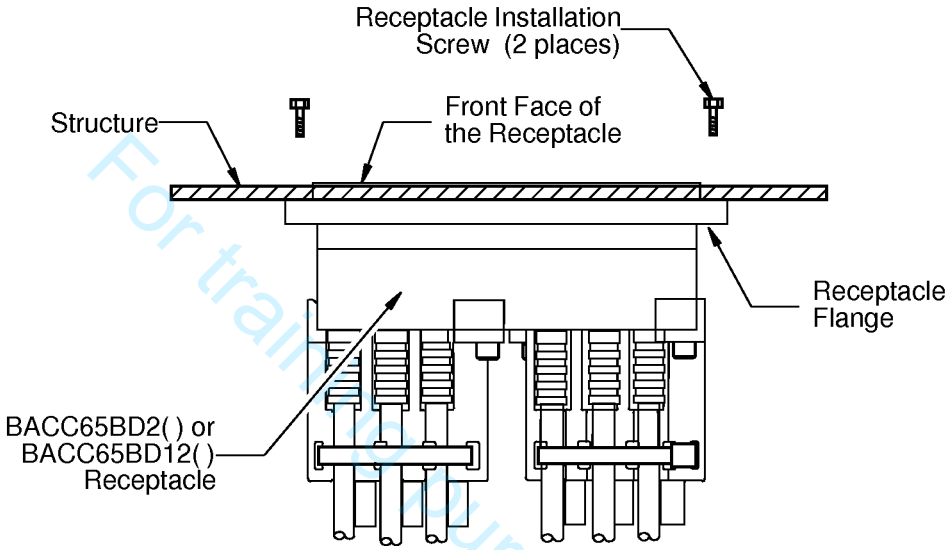

INSTALLATION OF THE RECEPTACLE AND THE STRUCTURE
Figure 66

For training purposes only!

Refer to Figure 66.

(1) Make a selection of two screws from Table 29.

Make sure that the screws are new.

CAUTION: SCREWS THAT ARE NOT NEW CAN CAUSE UNSATISFACTORY PERFORMANCE OF THE CONNECTOR.

(2) Make a selection of these tools from Table 30:
- A driver
- A torque tool.

(3) From the rear side of the structure, put the front face of the receptacle into the cutout and align the mounting holes of the receptacle flange with the holes in the structure.

(4) From the front side of the structure, install 2 screws.

(a) Install the first screw in the mounting hole next to contact cavity number 1.

(b) Install the second screw in the mounting hole diagonally opposite to the first screw.

(5) Tighten each screw until:
- The screw head is against the structure
- The connector flange is fully against the structure.

Make sure that the flange of the receptacle is fully flat against the surface of the structure.

BOEING PROPRIETARY - Copyright © Unpublished Work - See title page for details

(6) Torque each screw 12 inch-pounds to 15 inch-pounds.

B. Plug and Receptacle Connection

Table 31
NECESSARY TOOLS

Tool	Type	Size (inch)
Driver	Hex Head	9/64

(1) Make a selection of a driver from Table 31.

(2) Make sure that the polarization position of the key on the plug connector agrees with the polarization position of the keyway on the receptacle connector.

(3) Align the plug keyway to the receptacle key.

(4) Align the the plug connector perpendicular to the front face of the receptacle connector.

For training purposes only!

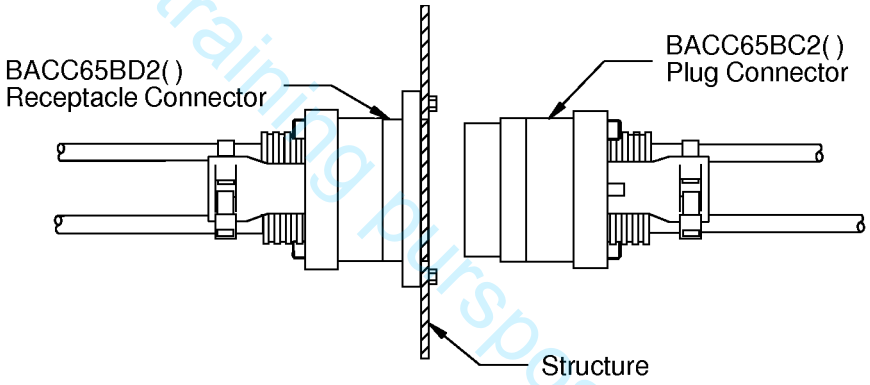

Alignment of the Plug to the Receptacle

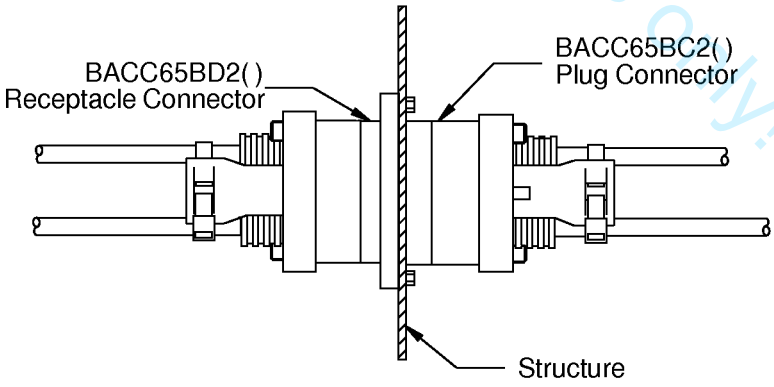

Completed Installation

INSTALLATION OF THE BACC65BC2( ) PLUG CONNECTOR
Figure 67

(5) Push the plug connector into the receptacle until it stops. Refer to Figure 67.

BOEING PROPRIETARY - Copyright © Unpublished Work - See title page for details

(6) With the driver:

(a) Engage the threads of the plug jackscrew and the threads of the receptacle jackpost.

(b) Torque the plug jackscrew 7 inch-pounds to 8 inch-pounds.

6. APPROVED TOOL SUPPLIERS

A. Contact Removal Tools

Table 32
CONTACT REMOVAL TOOL SUPPLIERS

Removal Tool	Supplier
1738196-1	Tyco

B. Contact Crimp Tools

Table 33
CRIMP TOOL SUPPLIERS

Crimp Tool	Supplier
K1025S	Daniels
K709	Daniels
M22520/2-01	QPL
M22520/2-06	QPL
M22520/5-01	QPL
M22520/5-45	QPL
Y793A	Daniels

C. Special Tools

Table 34
SPECIAL TOOL SUPPLIERS

Tool	Supplier
1604972-1	Tyco

For training purposes only!

BOEING PROPRIETARY - Copyright © Unpublished Work - See title page for details

ASSEMBLY OF BACC65BP, AND BACC65BR CONNECTORS

Paragraph		Page
1.	GENERAL DATA	1
A.	Damage Conditions - Rear Face of the Insert	1
B.	Damage Conditions - Front Face of the Insert	1
C.	Damage Conditions - Coupling Latch	1
D.	Damage Conditions - Strain Relief Backshell	1
E.	Minimum Wire O.D. for an Environmentally Sealed Connector	1
2.	PART NUMBERS AND DESCRIPTION	1
A.	Connector Shell Part Numbers	1
B.	BACC65BP and BACC65BR Connector Description	2
C.	Connector Insert Part Numbers	2
D.	Contact Part Numbers	2
E.	Strain Relief Backshell Part Numbers	3
3.	INSERT CONFIGURATIONS	3
A.	BACI10BC Connector Inserts	3
4.	CONNECTOR DISASSEMBLY	3
A.	Connector Separation	3
B.	Insert Removal	4
C.	Contact Removal	5
D.	Removal of the Receptacle Connector from the Panel	5
5.	CONNECTOR ASSEMBLY	6
A.	Contact Assembly	6
B.	Contact Insertion	6
C.	Seal of an Empty Insert Contact Cavity	6
D.	Insert Installation	6
E.	Installation of the BACC10MY Strain Relief Backshell	8
6.	CONNECTOR INSTALLATION	11
A.	Equipment Identification	11
B.	Plug and Receptacle Connection	11
C.	Installation of the Receptacle Connector	13
7.	APPROVED TOOL SUPPLIERS	14
A.	Special Tools	14

For training purposes only!

20-74-18 CONTENTS

BOEING PROPRIETARY - Copyright © Unpublished Work - See title page for details

ASSEMBLY OF BACC65BP, AND BACC65BR CONNECTORS

1. GENERAL DATA

A. Damage Conditions - Rear Face of the Insert

Refer to Subject 20-74-04.

B. Damage Conditions - Front Face of the Insert

Refer to Subject 20-74-04.

C. Damage Conditions - Coupling Latch

The plug connector shell must be replaced if:

- The coupling latch has a crack
- A coupling latch hook is broken or has a crack
- The coupling latch is bent
- The coupling latch spring is missing or broken
- The coupling latch is broken.

The recepacle connector shell must be replaced if:

- The coupling latch pins are damaged or missing.

D. Damage Conditions - Strain Relief Backshell

The strain relief clamp must be replaced if:

- The backshell has a crack
- The wire harness tie tab is broken.

E. Minimum Wire O.D. for an Environmentally Sealed Connector

Refer to Subject 20-74-04.

2. PART NUMBERS AND DESCRIPTION

A. Connector Shell Part Numbers

Table 1
CONNECTOR SHELL PART NUMBERS

Boeing Standard	Connector Type	Configuration
BACC65BP1	Plug	1 Removable BACI10BC Insert Refer to Subject 20-74-04.
BACC65BR1	Receptacle	

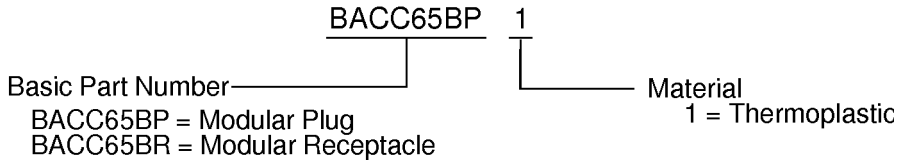

BACC65BP AND BACC65BR CONNECTOR PART NUMBER STRUCTURE
Figure 1

For training purposes only

BOEING PROPRIETARY - Copyright © Unpublished Work - See title page for details

Table 2
APPROVED SUPPLIERS OF BOEING STANDARD CONNECTOR SHELLS

Connector	Supplier
BACC65BP1	Amphenol - Air LB
BACC65BR1	Amphenol - Air LB

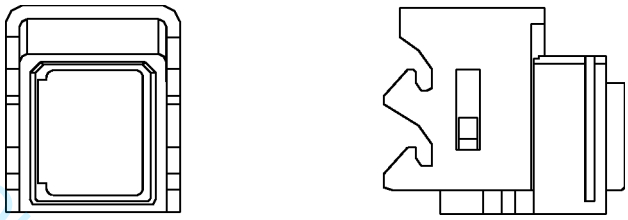

BACC65BP1 PLUG
Figure 2

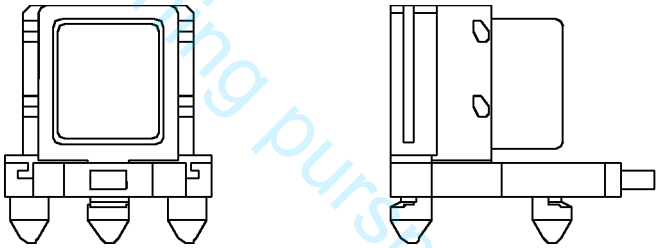

BACC65BR1 RECEPTACLE
Figure 3

For training purposes only!

B. BACC65BP and BACC65BR Connector Description

The BACC65BP plug and BACC65BR recepatacle connectors have these technical features:

- A rectangular thermoplastic shell in one shell size
- The shell has a removable BACI10BC insert
- Rear insertion and removal of the insert assembly
- Rear release, rear removal size 2222D, 2020, 2018, and 1616 crimp type insert contacts
- A removable thermoplastic strain relief backshell
- Spring-loaded, push-to-release connector coupling latch hooks on the plug connector
- A receptacle that has coupling latch retention pins.

C. Connector Insert Part Numbers

Refer to Subject 20-74-04.

D. Contact Part Numbers

Refer to Subject 20-74-04.

BOEING PROPRIETARY - Copyright © Unpublished Work - See title page for details

E. Strain Relief Backshell Part Numbers

Table 3
STRAIN RELIEF BACKSHELL PART NUMBERS

Boeing Standard	Shell Size	Configuration Angle	Strain Relief Description
BACC10MY1	1	Straight	Tie tab

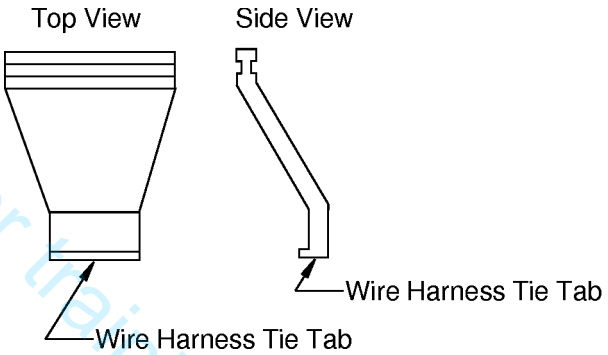

BACC10MY1 BACKSHELL
Figure 4

Table 4
APPROVED SUPPLIERS OF BOEING STANDARD STRAIN RELIEF BACKSHELLS

Boeing Standard	Supplier
BACC10MY1	Amphenol - Air LB

3. INSERT CONFIGURATIONS

A. BACI10BC Connector Inserts

Refer to Subject 20-74-04.

4. CONNECTOR DISASSEMBLY

A. Connector Separation

(1) Push on the coupling latch of the BACC65BP plug connector, and at the same time, pull the plug connector from the receptacle connector. Refer to Figure 5.

CAUTION: KEEP THE PLUG ALIGNED WITH THE RECEPTACLE WHILE YOU HOLD THE LATCH AND PULL THE PLUG FROM THE RECEPTACLE. DAMAGE TO THE CONNECTORS CAN OCCUR.

CAUTION: DO NOT PULL ON THE WIRES OR THE BACKSHELLS OF THE CONNECTORS. DAMAGE TO THE BACKSHELLS, WIRES, CONTACTS, OR THE CONNECTOR CAN OCCUR.

For training purposes only!

BOEING PROPRIETARY - Copyright © Unpublished Work - See title page for details

ASSEMBLY OF BACC65BP, AND BACC65BR CONNECTORS

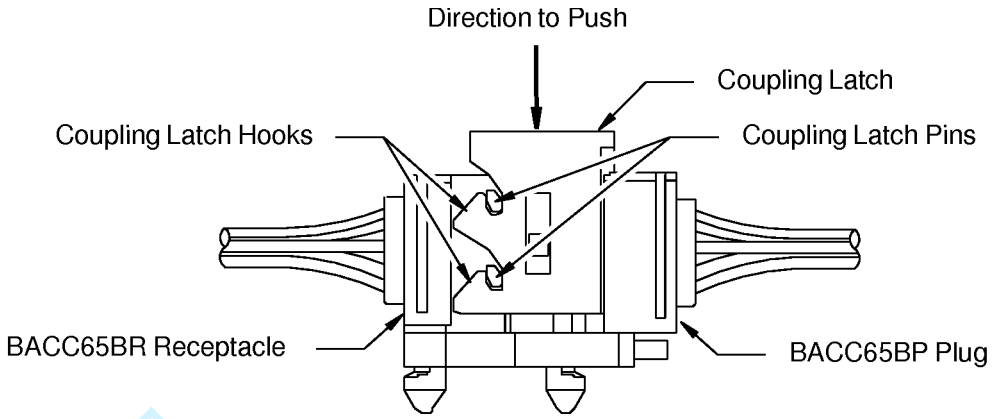

DIRECTION TO PUSH THE COUPLING LATCH AND SEPARATE THE PLUG FROM THE RECEPTACLE
Figure 5

For training purposes only!

B. Insert Removal

Table 5
INSERT REMOVAL TOOLS

Part Number	Supplier
00610100000	Amphenol

NOTE: It is not necessary to remove the insert contacts, or the strain relief backshell before the insert is removed.

(1) Make a selection of an insert removal tool from Table 5.

(2) If the connector has a strain relief backshell, remove the plastic tie strap or the wire harness tie from the backshell.

(3) From the rear of the connector, align the blades of the removal tool with the longer sides of the insert. Refer to Figure 6.

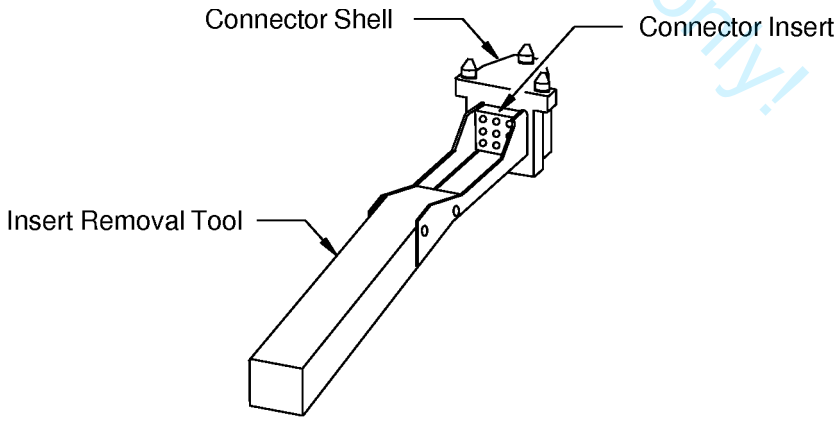

POSITION OF THE INSERT REMOVAL TOOL IN THE CONNECTOR SHELL
Figure 6

BOEING PROPRIETARY - Copyright © Unpublished Work - See title page for details

(4) Carefully push the removal tool between the insert cavity and the insert. Make sure to keep the tool aligned with the insert. Refer to Figure 6.

(5) Pull the insert removal tool and the insert out of the connector. Refer to Figure 7. Make sure to keep the tool aligned with the insert.

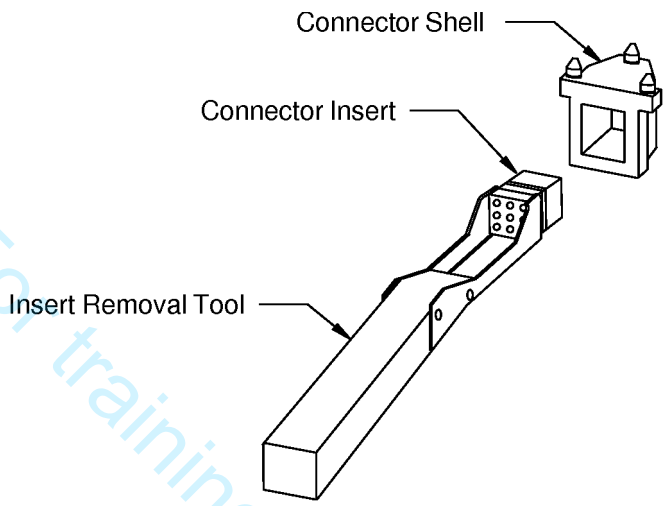

REMOVAL OF THE INSERT FROM THE CONNECTOR
Figure 7

NOTE: It is permitted to use the hand to help push the insert out of the connector.

C. Contact Removal

Refer to Subject 20-74-04.

D. Removal of the Receptacle Connector from the Panel

(1) Push and hold the Release Button of the receptacle connector. Refer to Figure 8.

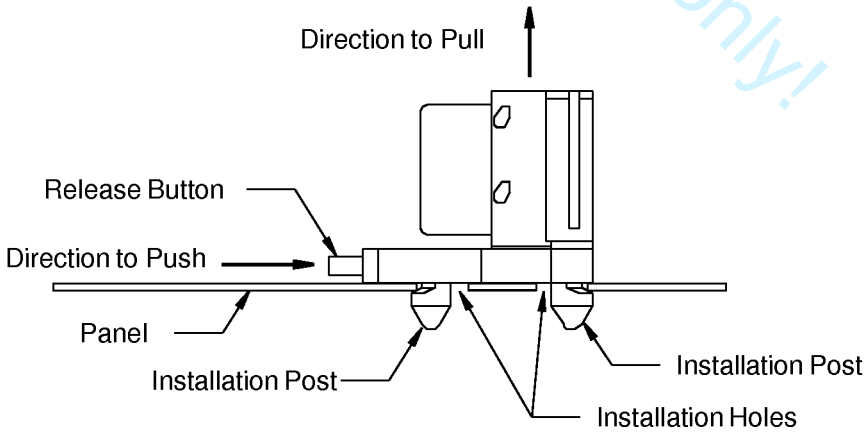

RECEPTACLE REMOVAL
Figure 8

For training purposes only!

BOEING PROPRIETARY - Copyright © Unpublished Work - See title page for details

(2) Pull the receptacle connector from the panel.

Make sure that the installation posts of the connector come through the installation holes in the panel.

5. CONNECTOR ASSEMBLY

A. Contact Assembly

Refer to Subject 20-74-04.

B. Contact Insertion

Refer to Subject 20-74-04.

C. Seal of an Empty Insert Contact Cavity

Refer to Subject 20-74-04.

D. Insert Installation

For training purposes only!

Table 6
INSERT INSTALLATION TOOLS

Part Number	Supplier
00610100600	Amphenol

NOTE: The insert can be installed with contacts or without contacts.

(1) Make a selection of an insert installation tool from Table 6.

NOTE: Asatisfactory alternative is to install the insert with the hand.

(2) Align the key on the insert and the keyway in the connector shell insert cavity.

(3) Align the insert installation tool, the insert, and the connector shell. Refer to Figure 9.

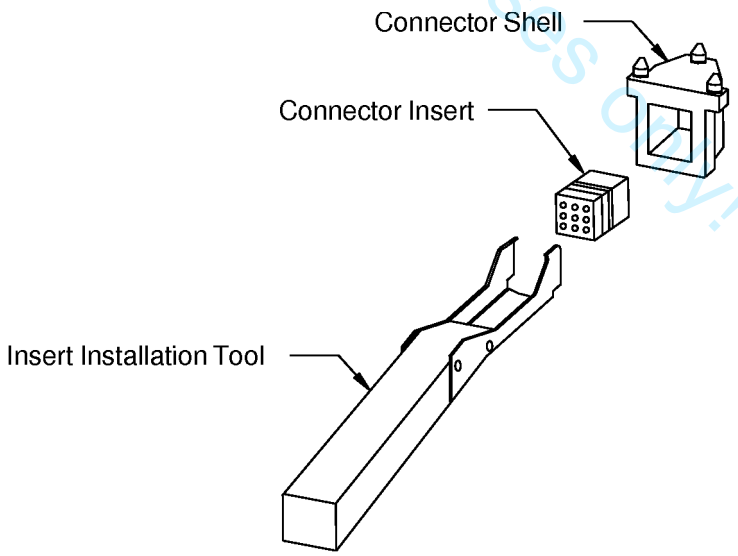

ALIGNMENT OF THE INSTALLATION TOOL WITH THE INSERT AND THE CONNECTOR
Figure 9

BOEING PROPRIETARY - Copyright © Unpublished Work - See title page for details

ASSEMBLY OF BACC65BP, AND BACC65BR CONNECTORS

(4) Put the insert on the installation tool. Refer to Figure 10.

Make sure that the key on the insert and the keyway in the shell cavity are aligned.

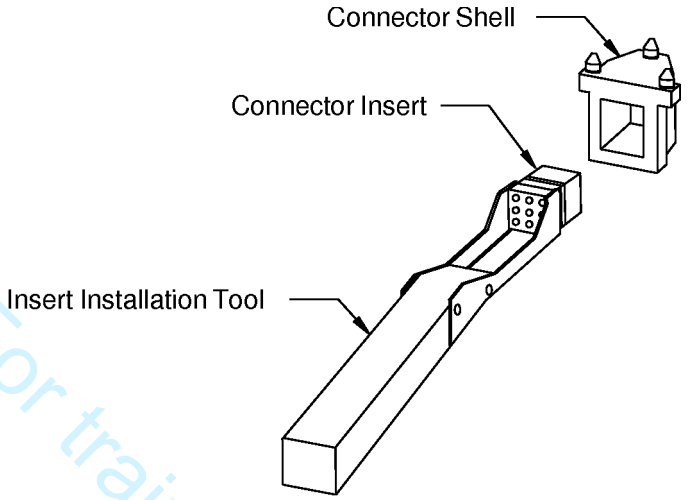

INSTALLATION TOOL WITH INSERT READY TO INSTALL
Figure 10

(5) Push the insert into the cavity until it stops and is locked in position. Refer to Figure 11.

CAUTION: IF THE INSERT DOES NOT GO EASILY INTO THE CONNECTOR SHELL, DO NOT CONTINUE TO PUSH THE INSERT. DAMAGE TO THE INSERT OR THE CONNECTOR CAN OCCUR.

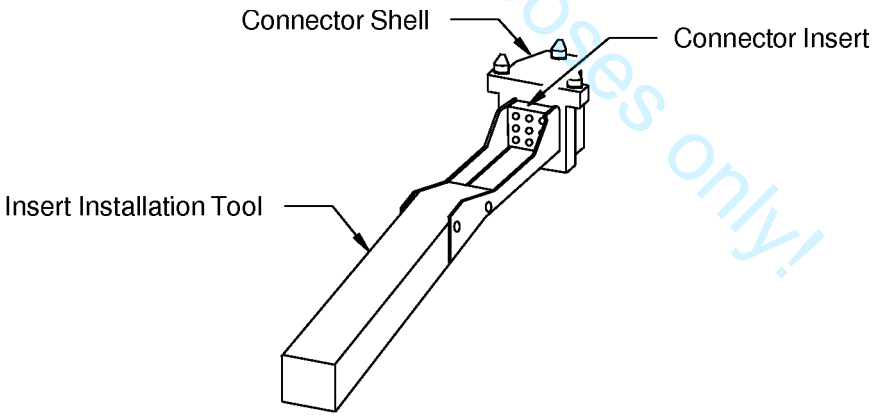

POSITION OF THE INSERT INSTALLATION TOOL AND THE INSERT IN THE CONNECTOR SHELL
Figure 11

(6) Pull the insert installation tool from the connector shell.

Make sure that the insert is locked in the connector shell.

(7) If the insert is not locked in the connector:

(a) Push the insert out of the connector.

For training purposes only!

BOEING PROPRIETARY - Copyright © Unpublished Work - See title page for details

(b) Do Step (2) through Step (5) again.

E. Installation of the BACC10MY Strain Relief Backshell

Table 7
NECESSARY MATERIALS

Material	Part Number	Supplier
Silicone Tape	Scotch 70	3M

(1) Make a selection of a Silicone tape from Table 7.

(2) For a 12 o'clock or straight backshell, wind a minimum of 2 layers of silicone tape on the wire harness. Refer to Figure 12.

Make sure that:

- The forward edge of the tape is not farther than 0.15 inch from the rear edge of the connector
- The layers of tape do not make an overlap that is more than 0.25 inch.

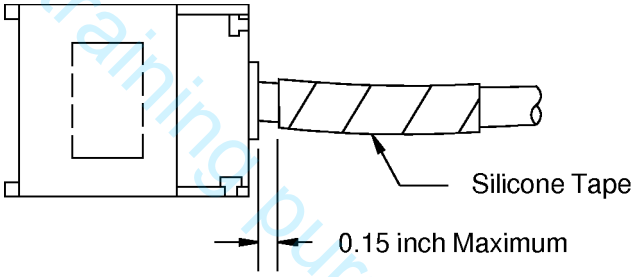

POSITION OF THE TAPE ON THE WIRE HARNESS - STRAIGHT STRAIN RELIEF
Figure 12

(3) Align the attachment end of the strain relief arm and the strain relief slot on the connector shell.

Refer to:

- Figure 13 for the position of the backshell for a plug shell
- Figure 14 for the location of the strain relief slots on the plug shell
- Figure 15 for the position of the backshell for a receptacle shell
- Figure 16 for the location of the strain relief slots on the receptacle shell.

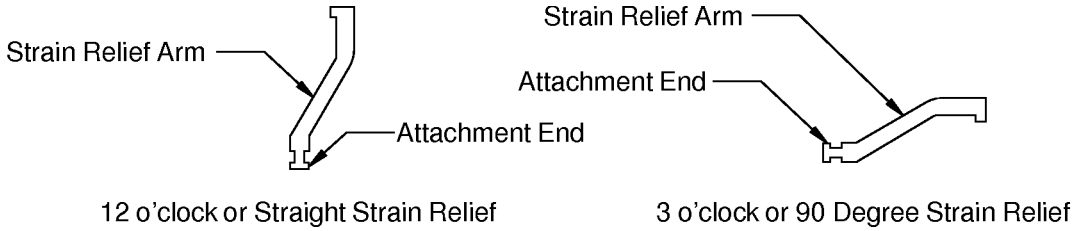

POSITIONS OF THE BACKSHELL FOR A PLUG SHELL
Figure 13

For training purposes only!

BOEING PROPRIETARY - Copyright © Unpublished Work - See title page for details

ASSEMBLY OF BACC65BP, AND BACC65BR CONNECTORS

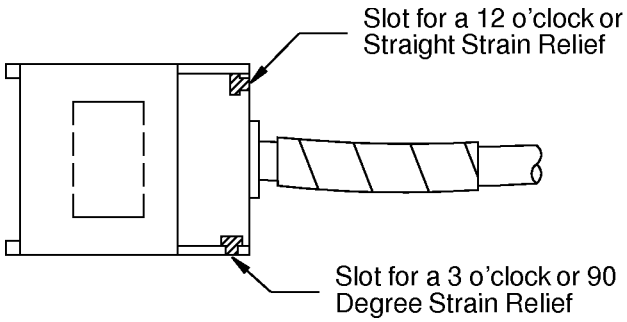

LOCATION OF THE STRAIN RELIEF SLOTS ON THE PLUG SHELL
Figure 14

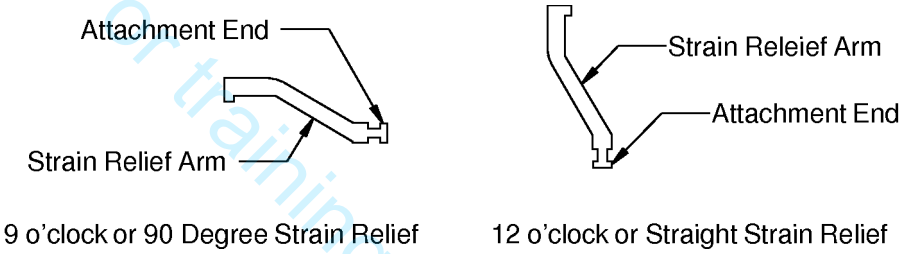

POSITIONS OF THE BACKSHELL FOR A RECEPTACLE SHELL
Figure 15

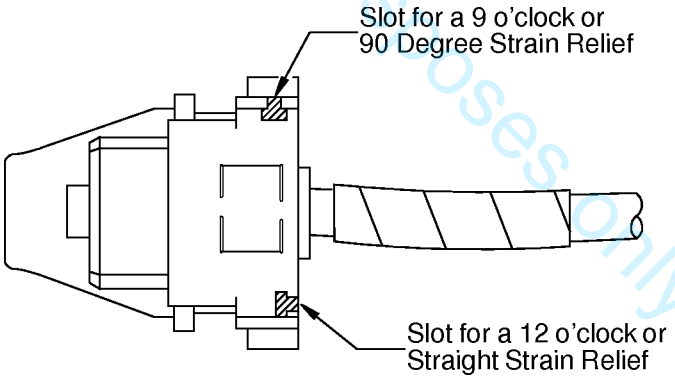

LOCATION OF THE STRAIN RELIEF SLOTS ON THE RECEPTACLE SHELL
Figure 16

(4) Put the attachment end of the strain relief arm in the slot.

(5) Align the center of the strain relief arm and the center of the connector grommet.

(6) For a 90 degree strain relief:

(a) Bend the wire harness toward the strain relief arm.

Make sure that force is not put on the contact assemblies in the connector insert.

(b) Wind a minimum of 2 layers of the silicone tape on the wire harness at the location of the tie tab of the strain relief arm. Refer to Figure 17.

BOEING PROPRIETARY - Copyright © Unpublished Work - See title page for details
For training purposes only!

ASSEMBLY OF BACC65BP, AND BACC65BR CONNECTORS

Make sure that the layers of tape do not make an overlap that is more than 0.25 inch.

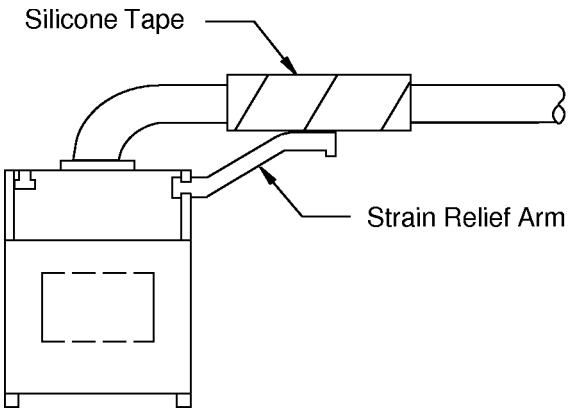

POSITION OF THE TAPE ON THE WIRE HARNESS - 90 DEGREE STRAIN RELIEF
Figure 17

(7) Assemble a wire harness tie or install a plastic tie strap on the wire harness and the wire harness tie tab.

Refer to:

- Figure 18 for a straight strain relief
- Figure 19 for a 90 degree strain relief
- Subject 20-10-11 for the procedure to assemble the wire harness tie.

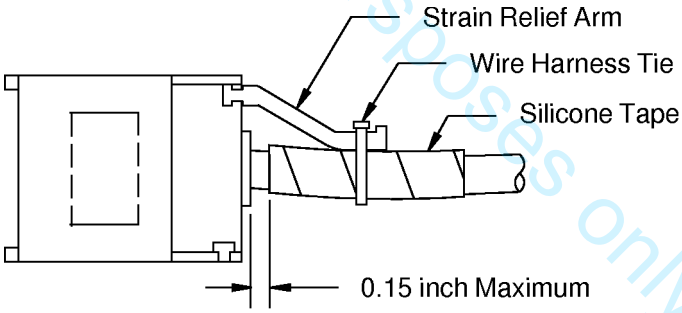

STRAIGHT STRAIN RELIEF
Figure 18

For training purposes only!

BOEING PROPRIETARY - Copyright © Unpublished Work - See title page for details

ASSEMBLY OF BACC65BP, AND BACC65BR CONNECTORS

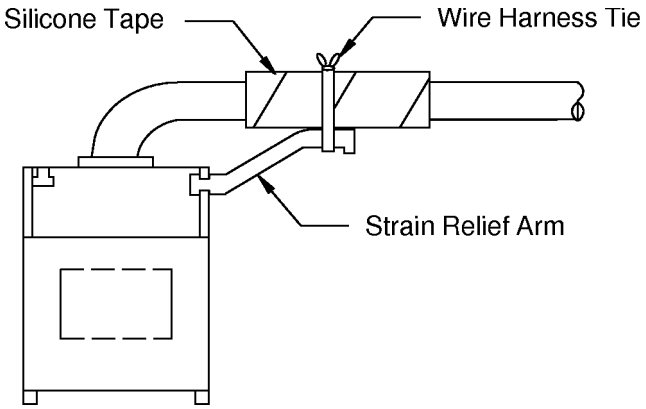

90 DEGREE STRAIN RELIEF
Figure 19

For training purposes only!

6. CONNECTOR INSTALLATION

A. Equipment Identification

The identification label on the wire harness near the connector can have this information:

- The equipment number for the connector or the connector insert
- The mate-with disconnect panel number
- The connector position on the panel
- The mate-with nomenclature
- The wire harness number.

Refer to Figure 20.

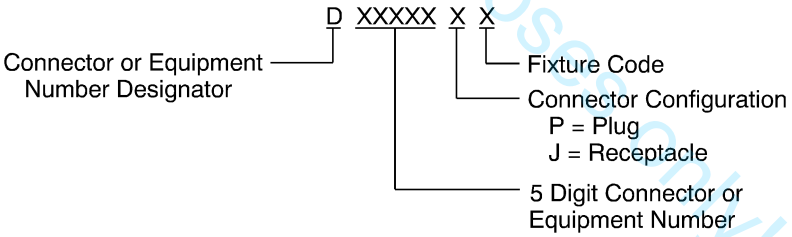

EQUIPMENT NUMBER STRUCTURE
Figure 20

B. Plug and Receptacle Connection

(1) Put the engaging end of the plug connector on the base of the receptacle connector. Refer to Figure 21.

BOEING PROPRIETARY - Copyright © Unpublished Work - See title page for details

ASSEMBLY OF BACC65BP, AND BACC65BR CONNECTORS

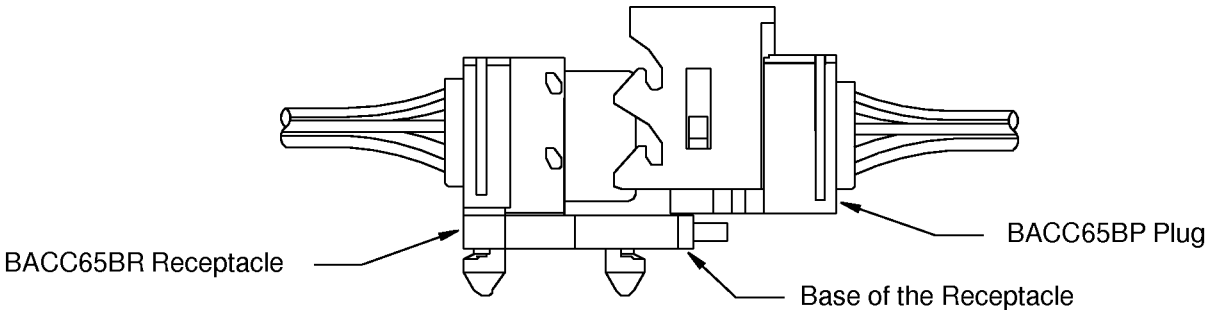

POSITION OF THE PLUG SHELL ON THE BASE OF THE RECEPTACLE SHELL
Figure 21

(2) Push and hold coupling latch of the plug connector. Refer to Figure 22.

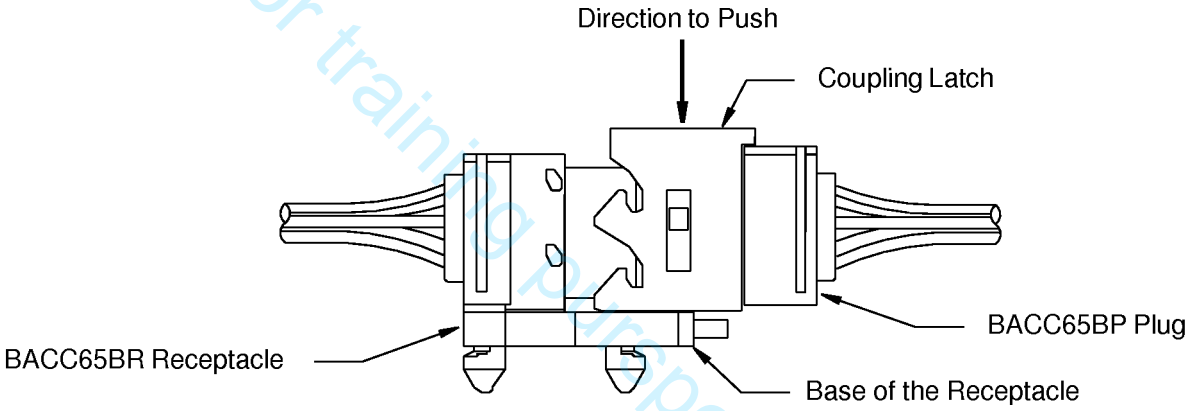

DIRECTION TO PUSH THE COUPLING LATCH
Figure 22

(3) Align the plug and the receptacle.

(4) Continue to hold the coupling latch against the base of the receptacle, and at the same time, push the plug to the receptacle until it stops. Refer to Figure 23.

Make sure that:

- The coupling latch hooks of the plug are aligned with the coupling latch pins of the receptacle.
- The connectors are fully engaged.

For training purposes only!

BOEING PROPRIETARY - Copyright © Unpublished Work - See title page for details

ASSEMBLY OF BACC65BP, AND BACC65BR CONNECTORS

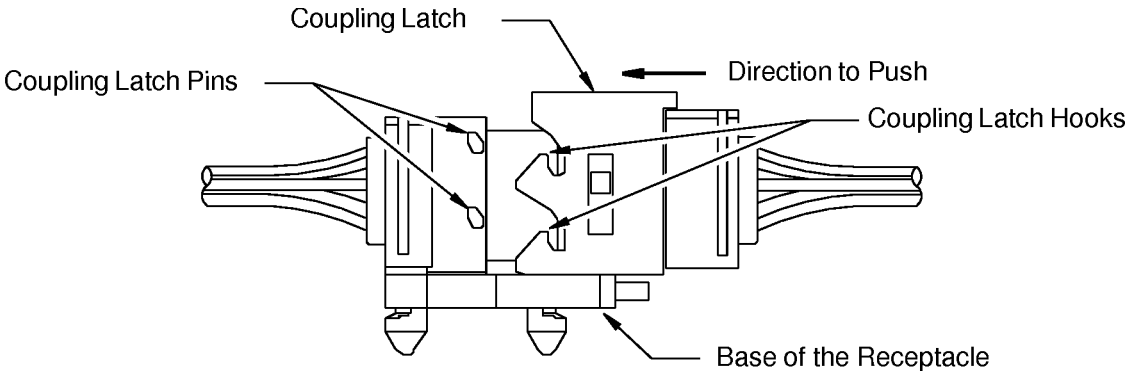

ALIGNMENT OF THE PLUG AND THE RECEPTACLE FOR ENGAGEMENT
Figure 23

(5) Release athe latch and let the hooks hold the pins. Refer to Figure 24.

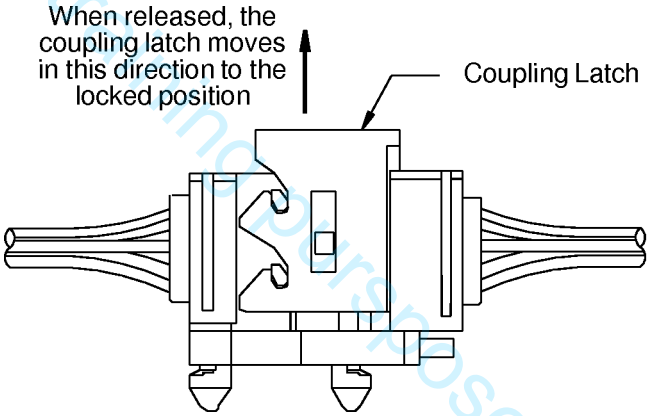

POSITION OF THE COUPLING LATCH WHEN CONNECTORS ARE FULLY ENGAGED AND THE COUPLING LATCH IS RELEASED
Figure 24

For training purposes only!!

C. Installation of the Receptacle Connector

(1) Push and hold the Release Button of the receptacle connector. Refer to Figure 25.

BOEING PROPRIETARY - Copyright © Unpublished Work - See title page for details

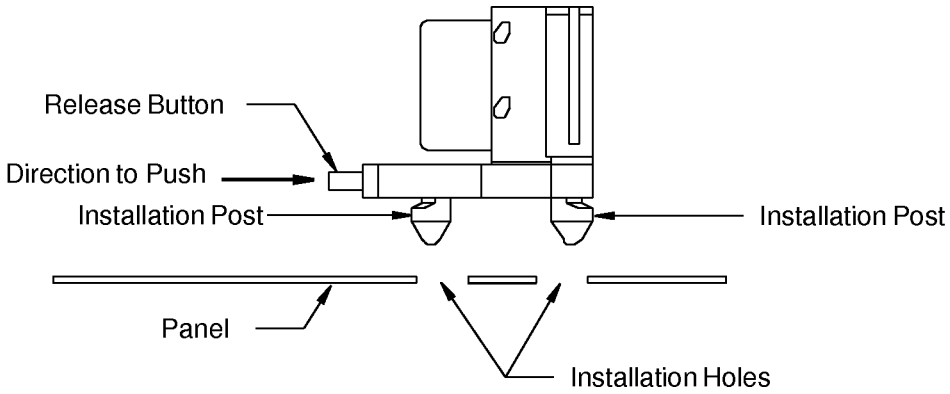

RECEPTACLE INSTALLATION
Figure 25

(2) Put the connector against the panel.
Make sure that the installation posts of the connector go through the installation holes in the panel.

(3) Release the button.
Make sure that the installation posts of the receptacle lock the receptacle on the panel.

7. APPROVED TOOL SUPPLIERS

A. Special Tools

Table 8
SPECIAL TOOL SUPPLIERS

Tool	Supplier
00610100600	Amphenol
00610100000	Amphenol

For training purposes only!

BOEING PROPRIETARY - Copyright © Unpublished Work - See title page for details

ASSEMBLY OF BACC65BU, BACC65BV AND BACC65CA RECTANGULAR CONNECTORS

Paragraph		Page
1.	**GENERAL DATA**	**1**
A.	Damage Conditions - Rear Face of the Insert	1
B.	Damage Conditions - Front Face of the Insert	1
C.	Damage Conditions - Nut Ring	1
D.	Minimum Wire O.D. for an Environmentally Sealed Connector	1
2.	**PART NUMBERS AND DESCRIPTION**	**1**
A.	Connector Shell Part Numbers	1
B.	Connector Plug Shell Component Part Numbers	2
C.	BACC65BU, BACC65BV and BACC65CA Connector Description	2
D.	Connector Insert Part Numbers	3
E.	Contact Part Numbers	3
F.	Backshell Part Numbers	4
3.	**INSERT CONFIGURATIONS**	**6**
A.	BACI10BC Connector Inserts and Insert Configurations	6
4.	**CONNECTOR DISASSEMBLY**	**6**
A.	Plug and Receptacle Separation	6
B.	Removal of the Receptacle	7
C.	Insert Removal	7
D.	Seal Plug Removal	8
E.	Contact Removal	8
F.	Strain Relief Backshell Removal	9
G.	EMI Backshell Removal	9
5.	**CONNECTOR ASSEMBLY**	**10**
A.	Contact Assembly	10
B.	Seal of an Empty Insert Contact Cavity	11
C.	Insert Installation	11
D.	Cable Preparation - Solder Sleeve Shield Termination	12
E.	Cable Preparation - Shield Pull Through Shield Termination	13
F.	Backshell Assembly with Shield Ground Wires	14
G.	Backshell Assembly without Shield Ground Wires	18
H.	Shield Terminator Band Installation	19
6.	**CONNECTOR INSTALLATION**	**20**
A.	Installation of the Receptacle Nut Ring	20
B.	Installation of the Receptacle	21
C.	Plug and Receptacle Connection	22
7.	**APPROVED TOOL SUPPLIERS**	**23**
A.	Special Tools	23

20-74-19 CONTENTS

BOEING PROPRIETARY - Copyright © Unpublished Work - See title page for details

For training pursposes only!

ASSEMBLY OF BACC65BU, BACC65BV AND BACC65CA RECTANGULAR CONNECTORS

1. GENERAL DATA

A. Damage Conditions - Rear Face of the Insert

Refer to Subject 20-74-04.

B. Damage Conditions - Front Face of the Insert

Refer to Subject 20-74-04.

C. Damage Conditions - Nut Ring

The nut ring must be replaced if:

- It has a crack
- It is bent
- It is broken.

D. Minimum Wire O.D. for an Environmentally Sealed Connector

Refer to Subject 20-74-04.

2. PART NUMBERS AND DESCRIPTION

A. Connector Shell Part Numbers

Table 1
CONNECTOR SHELL PART NUMBERS

Boeing Standard	Connector Type	Configuration
BACC65BU()	Plug	1 Removable BACI10BC Insert
BACC65BV()	Receptacle	
BACC65CA()	Receptacle, Wall Mount	

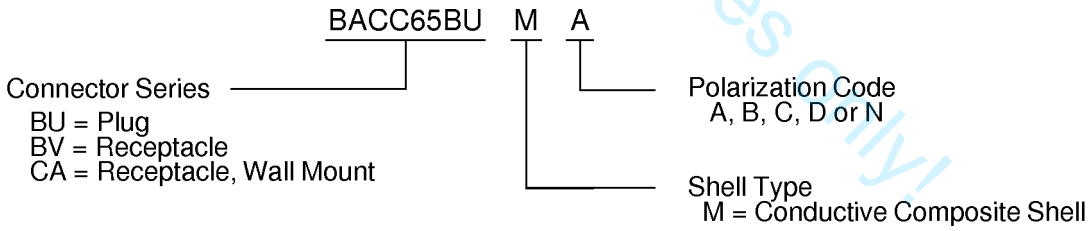

CONNECTOR PART NUMBER STRUCTURE
Figure 1

Table 2
APPROVED SUPPLIERS OF BOEING STANDARD CONNECTOR SHELLS

Connector	Supplier
BACC65BU()	Deutsch
BACC65CA()	
BACC65BV()	

For training purposes only!

BOEING PROPRIETARY - Copyright © Unpublished Work - See title page for details

B. Connector Plug Shell Component Part Numbers

Table 3
CONNECTOR PLUG SHELL COMPONENT PART NUMBERS

Component	Material	Applicable Connector		Supplier
		Part Number	Shell Type	
Shell	Polyetherimide per ASTM D 5205	BACC65BU	M	Deutsch
Coupling Latch	Polyetherimide per ASTM D 5205	BACC65BU	M	Deutsch
Ground Spring	AISI 302 CRES per AMS 5688 or Beryllium Copper per ASTM B 194	BACC65BU	M	Deutsch

Table 4
APPROVED SUPPLIERS OF BOEING STANDARD CONNECTOR SHELL COMPONENTS

Boeing Standard	Supplier
BACC65BU	Deutsch
BACC65BV	
BACC65CA	

For training purposes only!

C. BACC65BU, BACC65BV and BACC65CA Connector Description

Refer to Figure 2 for configurations of these connectors.

The BACC65BU, BACC65BV and BACC65CA connectors have these technical features:

- A rectangular composite shell
- A removable BACI10BC insert
- 20 polarization positions
- Nut Ring on some receptacle shell configurations
- Rear insertion and removal of the insert assembly
- Rear release, rear removal crimp type contacts
- Removable strain relief or EMI backshell.

BOEING PROPRIETARY - Copyright © Unpublished Work - See title page for details

ASSEMBLY OF BACC65BU, BACC65BV AND BACC65CA RECTANGULAR CONNECTORS

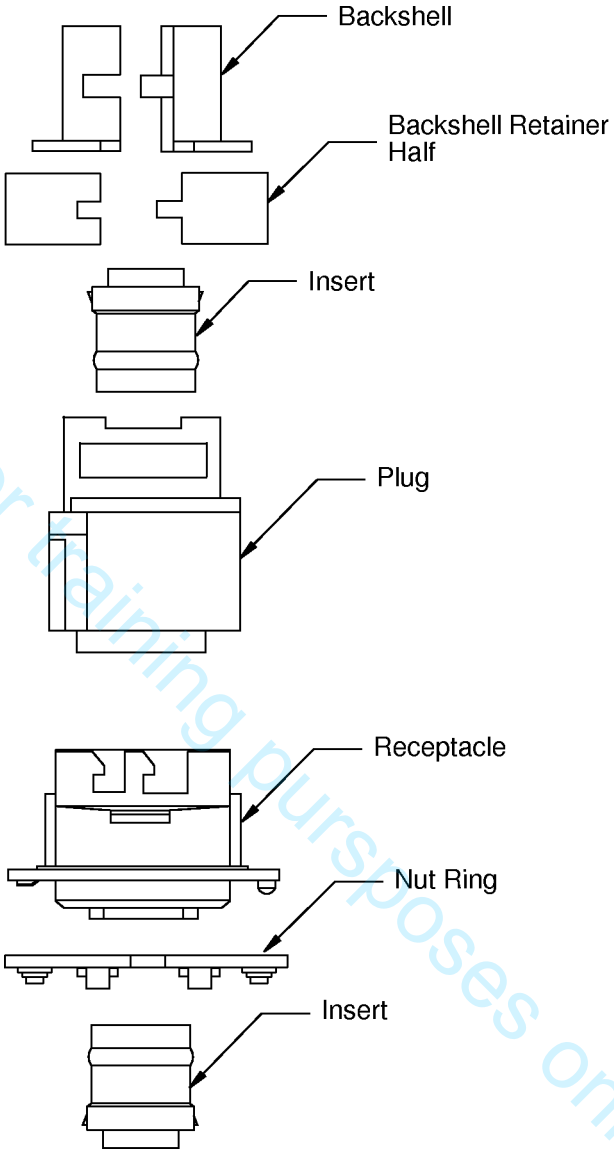

For training purposes only!

BACC65BU, BACC65BV AND BACC65CA CONNECTOR CONFIGURATION
Figure 2

D. Connector Insert Part Numbers

Refer to Subject 20-74-04.

E. Contact Part Numbers

Refer to Subject 20-74-04.

BOEING PROPRIETARY - Copyright © Unpublished Work - See title page for details

ASSEMBLY OF BACC65BU, BACC65BV AND BACC65CA RECTANGULAR CONNECTORS

F. Backshell Part Numbers

Table 5
BACKSHELL PART NUMBERS

Part Number	Configuration	Type	Supplier	Reference
787-8055-10M	Straight	EMI	Deutsch	Figure 3
787-8055-16M	Straight	Strain Relief	Deutsch	Figure 4
787-8055-20M	45 Degree	EMI	Deutsch	Figure 5
787-8055-30M	90 Degree	EMI	Deutsch	Figure 6

Table 6
BACKSHELL COMPONENTS

Part Number	Backshell Component	Supplier
787-8055-14	Backshell Retainer Half	Deutsch

Table 7
APPROVED SUPPLIERS OF BOEING STANDARD EMI BACKSHELLS

Backshell	Supplier
787-8055-()	Deutsch

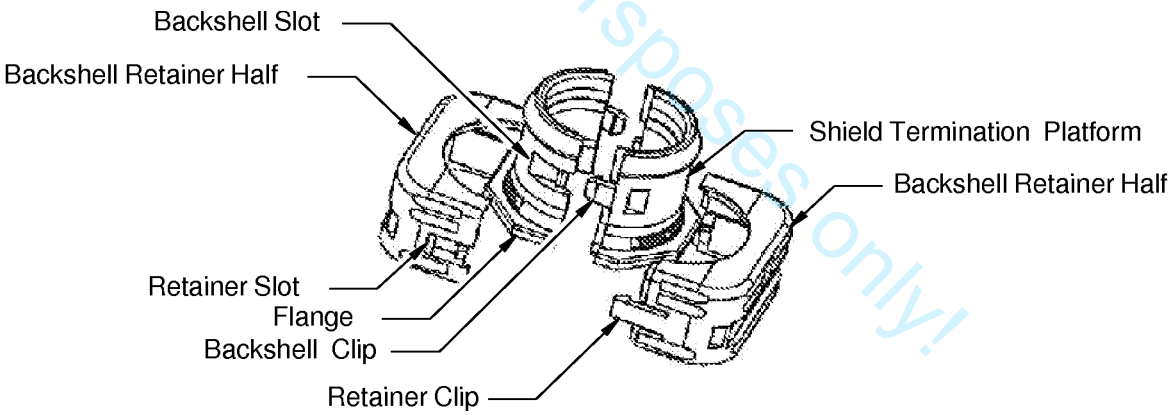

STRAIGHT EMI BACKSHELL
Figure 3

For training purposes only!

BOEING PROPRIETARY - Copyright © Unpublished Work - See title page for details

ASSEMBLY OF BACC65BU, BACC65BV AND BACC65CA RECTANGULAR CONNECTORS

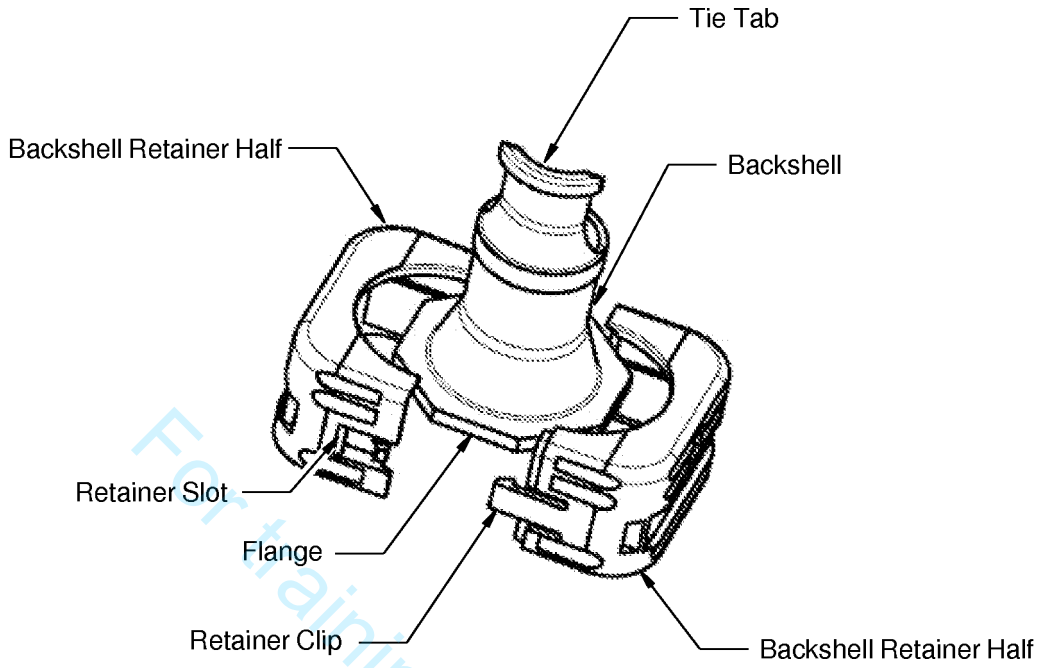

STRAIGHT STRAIN RELIEF BACKSHELL
Figure 4

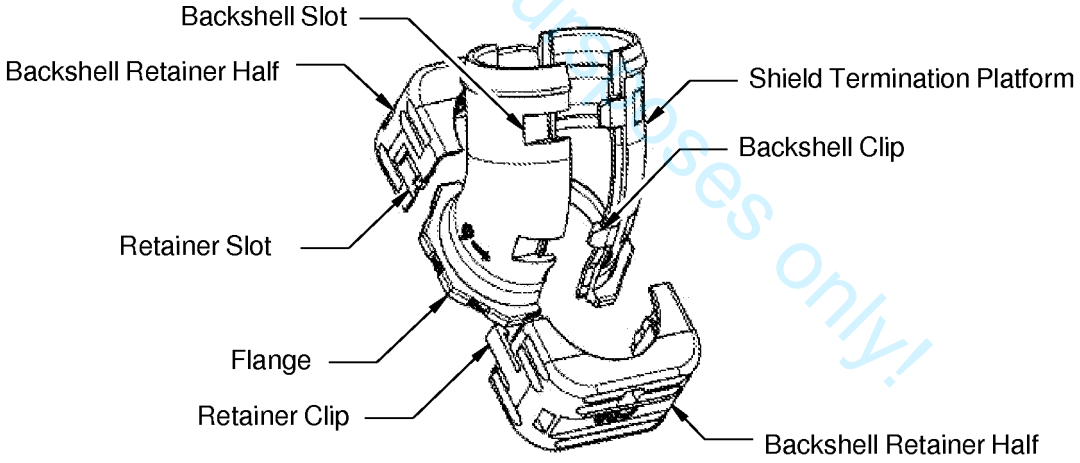

45 DEGREE EMI BACKSHELL
Figure 5

For training purposes only!

BOEING PROPRIETARY - Copyright © Unpublished Work - See title page for details

ASSEMBLY OF BACC65BU, BACC65BV AND BACC65CA RECTANGULAR CONNECTORS

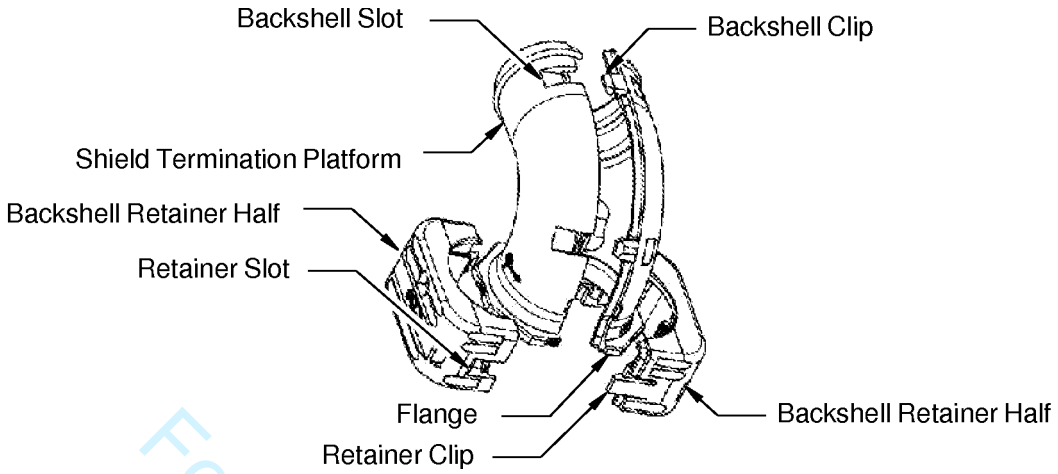

90 DEGREE EMI BACKSHELL
Figure 6

For training purposes only!

3. **INSERT CONFIGURATIONS**

   A. **BACI10BC Connector Inserts and Insert Configurations**

   Refer to Subject 20-74-04.

4. **CONNECTOR DISASSEMBLY**

   A. **Plug and Receptacle Separation**

   (1) Push the coupling latch of the plug shell until it stops. Refer to Figure 7.

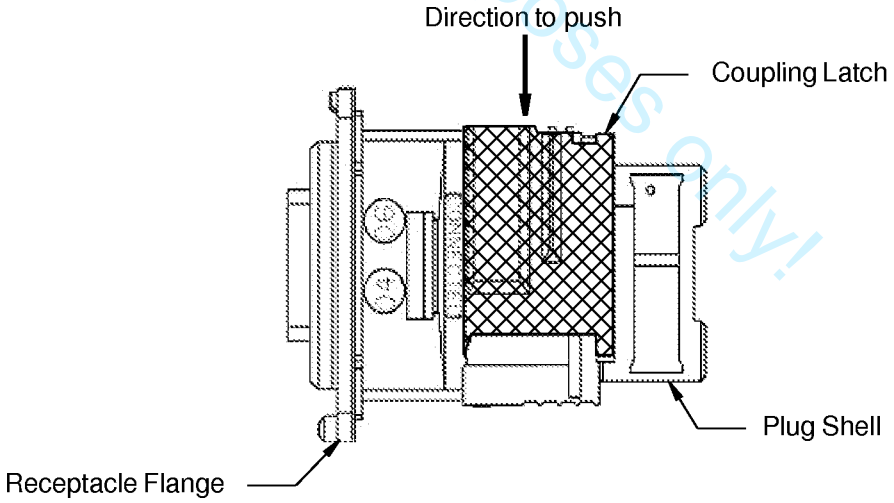

DIRECTION TO PUSH THE COUPLING LATCH TO SEPARATE THE CONNECTORS
Figure 7

   (2) Continue to hold the coupling latch and, at the same time, pull the plug from the receptacle. Make sure that the plug and the receptacle stay aligned while they separate.

BOEING PROPRIETARY - Copyright © Unpublished Work - See title page for details

ASSEMBLY OF BACC65BU, BACC65BV AND BACC65CA RECTANGULAR CONNECTORS

CAUTION: DO NOT PULL ON THE WIRES. DAMAGE TO THE CONNECTOR, THE WIRE OR THE CONTACTS CAN RESULT.

B. Removal of the Receptacle

Table 8
NECESSARY TOOLS

Tool	Size	Supplier
Nut Driver, Hex	3/16 inch	An available source
Screwdriver, Phillips	#1	An available source

(1) Make a selection of these tools from Table 8.
- A Phillips screwdriver
- A hex nut driver.

NOTE: If the receptacle installation has a nut ring or a nut plate, the hex nut driver is not necessary.

(2) If the plug is installed, remove the plug from the receptacle. Refer to Paragraph 4.A.

(3) If the receptacle installation has has a nut ring, remove each installation screw from the applicable integral nut of the nut ring.

Make sure to keep the screws.

(4) If the receptacle installation does not have has a nut ring:

(a) Remove the nut from each installation screw.

Make sure to keep the nuts.

(b) Remove each installation screw from the holes in the structure.

Make sure to keep the screws.

(5) Pull the receptacle shell from the structure.

C. Insert Removal

NOTE: It is not necessary to remove the contacts from the insert, before the insert is removed.

Table 9
INSERT REMOVAL TOOLS

Tool	Part Number	Supplier
Insert Removal Tool	00610100600	Amphenol

(1) Make a selection of an insert removal tool from Table 9.

(2) If the connector has an EMI backshell installed, remove the EMI backshell from the connector; refer to Paragraph 4.F. or 4.G..

(3) From the rear of the connector, align the removal tool with the shorter sides of the insert. Refer to Figure 8.

For training purposes only!!

BOEING PROPRIETARY - Copyright © Unpublished Work - See title page for details

ASSEMBLY OF BACC65BU, BACC65BV AND BACC65CA RECTANGULAR CONNECTORS

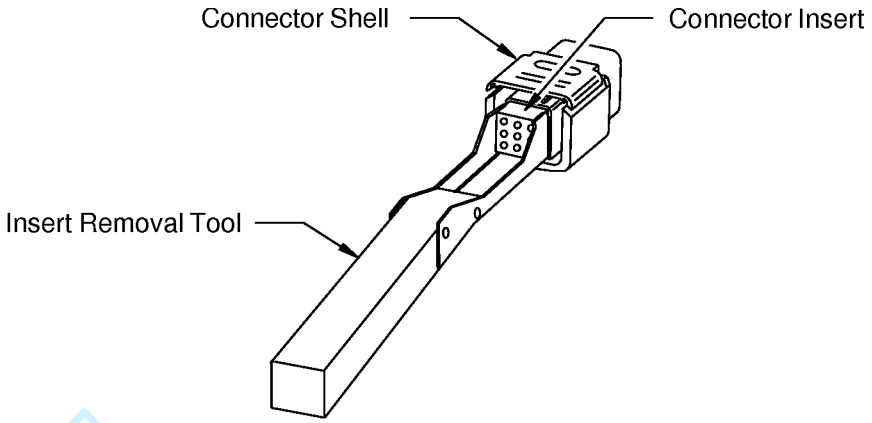

ALIGNMENT OF THE INSERT REMOVAL TOOL AND THE INSERT
Figure 8

(4) Carefully push the removal tool between the insert cavity and the insert until it stops. Make sure to keep the tool aligned with the insert.

(5) Push the insert out from the front side of the shell.

(6) Pull the insert removal tool and the insert out of the connector. Refer to Figure 9. Make sure to keep the tool aligned with the insert.

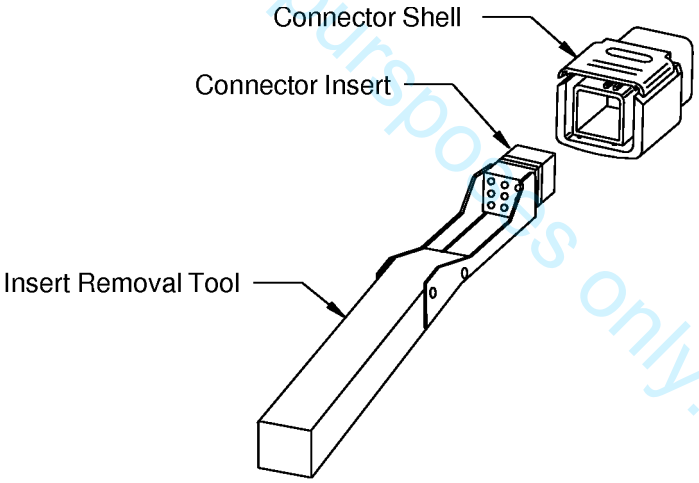

REMOVAL OF THE INSERT
Figure 9

D. Seal Plug Removal

Refer to Subject 20-74-04.

E. Contact Removal

Refer to Subject 20-74-04.

For training purposes only!

BOEING PROPRIETARY - Copyright © Unpublished Work - See title page for details

F. Strain Relief Backshell Removal

(1) Remove the silicone tape from the wire harness.

(2) Disengage the retainer clips of the backshell retainer halves.
Refer to Figure 4.

CAUTION: DO NOT BEND THE RETAINER CLIPS TOO FAR. THEY CAN EASILY BREAK OFF.

(3) Pull the backshell retainer halves apart.
Make sure to keep the backshell retainer halves.

(4) Remove the strain relief backshell.
Make sure to keep the strain relief backshell.

G. EMI Backshell Removal

For training purposes only

Table 10
EMI BACKSHELL REMOVAL TOOLS

Tool	Type	Supplier
Cutters	Diagonal	An available source
Knife	-	An available source
Pliers	Needle Nose	An available source

(1) Make a selection of:
- Diagonal Cutters
- A Knife
- Pliers.

Refer to Table 10.

(2) Remove the heat shrinkable sleeve:

(a) Remove the wire harness ties that are less than 6 inches from the connector.

CAUTION: DO NOT CAUSE DAMAGE TO THE INSULATION OF THE WIRE OR THE CABLE JACKET. DAMAGE TO THE WIRE INSULATION OR CABLE JACKET CAN CAUSE UNSATISFACTORY PERFORMANCE OF THE WIRE HARNESS.

(b) Carefully make a longitudinal cut in the heat shrinkable sleeve from one end to the other.

CAUTION: DO NOT CUT ALL THE WAY THROUGH THE HEAT SHRINKABLE SLEEVE. DAMAGE TO THE WIRE HARNESS CAN OCCUR.

(c) Pull the sleeve apart with pliers or with the fingers.

(3) Remove the silicone tape from the assembly.

(4) Remove the shield terminator band:

BOEING PROPRIETARY - Copyright © Unpublished Work - See title page for details

ASSEMBLY OF BACC65BU, BACC65BV AND BACC65CA RECTANGULAR CONNECTORS

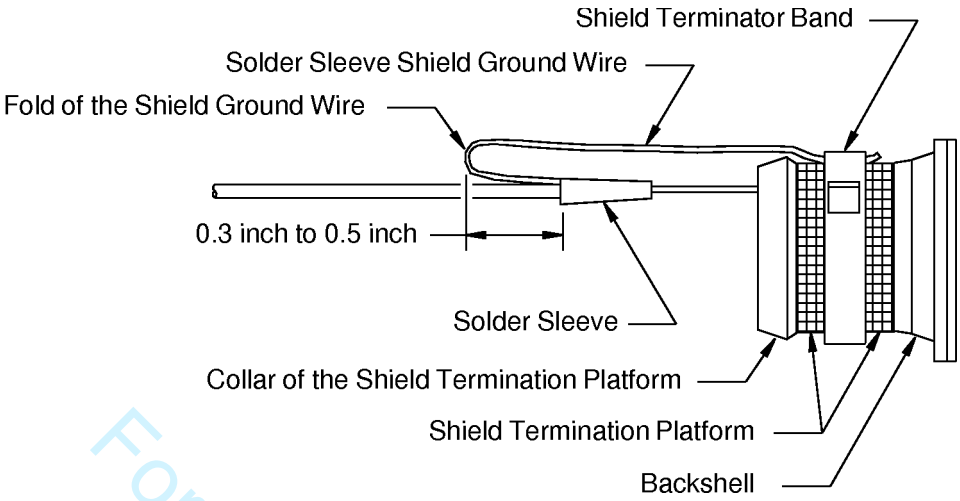

POSITION OF THE SHIELD TERMINATOR BAND ON THE BACKSHELL
Figure 10

For training purposes only!

Refer to Figure 10:

(a) Remove the teflon tape from the shield terminator band.

(b) Hold the buckle of the shield terminator band with the diagonal cutters.

(c) Rotate the cutters and lift the buckle of the band away from the backshell until the buckle releases or the band breaks.

(d) Remove the shield terminator band and discard it.

(5) Disengage the retainer clips of the backshell retainer halves.

Refer to:

- Figure 3 for the Straight EMI Backshell
- Figure 5 for the 45 degree EMI Backshell
- Figure 6 for the 90 Degree EMI Backshell

CAUTION: DO NOT BEND THE RETAINER CLIPS TOO FAR. THEY CAN EASILY BREAK OFF.

(6) Pull the backshell retainer halves apart.

Make sure to keep the backshell retainer halves.

(7) If the backshell is an EMI backshell:

(a) Disengage the backshell clips.

CAUTION: DO NOT BEND THE BACKSHELL CLIPS TOO FAR. THEY CAN EASILY BREAK OFF.

(b) Pull the backshell halves apart.

Make sure to keep the backshell halves.

5. CONNECTOR ASSEMBLY

A. Contact Assembly

For the procedure to assemble the contacts, refer to Subject 20-74-04.

BOEING PROPRIETARY - Copyright © Unpublished Work - See title page for details

B. Seal of an Empty Insert Contact Cavity

Refer to Subject 20-74-04.

C. Insert Installation

NOTE: An insert can be installed with contacts or without contacts.

NOTE: For the receptacle shell, if a nut ring is used, the nut ring must be installed before an insert with contact assemblies is installed.

(1) Make a selection of an insert installation tool, refer to table 11.

NOTE: The installation of the insert with the hand is a satisfactory alternative.

Table 11
INSERT INSTALLATION TOOLS

Tool Description	Part Number	Supplier
Insert Installation Tool	00610100600	Amphenol

(2) At the rear of the connector, align the tool, the insert and the connector insert cavity. Refer to figure 11.

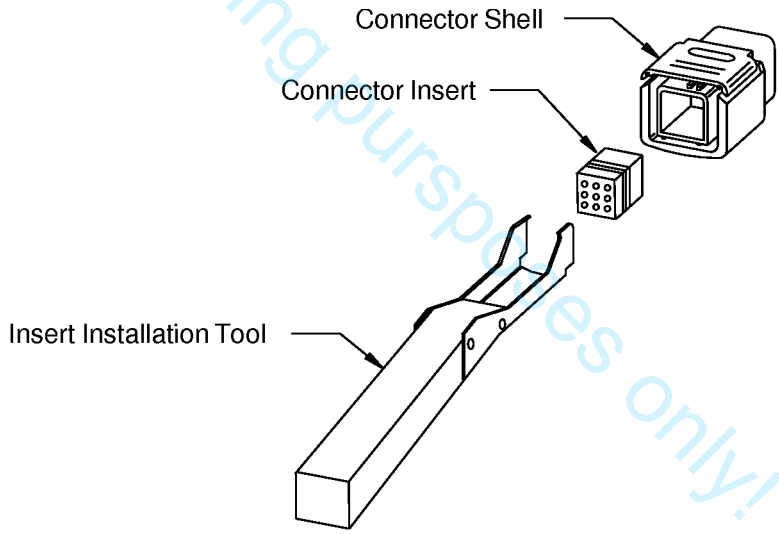

ALIGNMENT OF TOOL, THE INSERT, AND THE CONNECTOR INSERT CAVITY
Figure 11

(3) Align the key on the insert and the keyway in the insert cavity, refer to figure 13.

For training purposes only!

BOEING PROPRIETARY - Copyright © Unpublished Work - See title page for details

ASSEMBLY OF BACC65BU, BACC65BV AND BACC65CA RECTANGULAR CONNECTORS

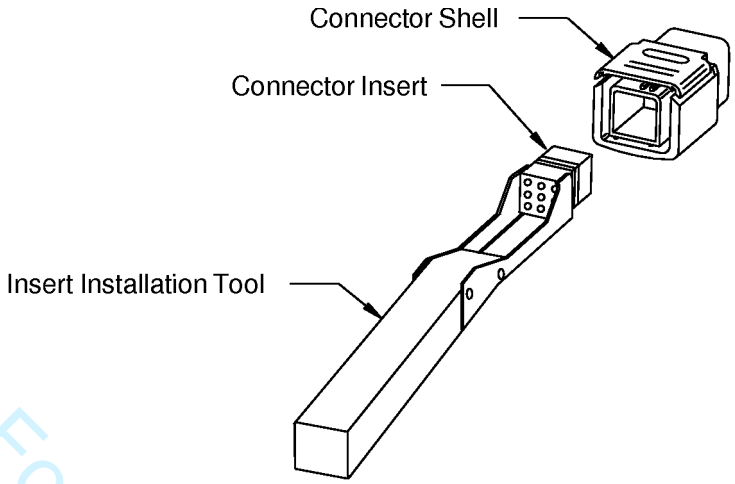

ALIGNMENT OF INSERT AND CONNECTOR
Figure 12

(4) Push the insert into the insert cavity until it stops and is locked in position.
Make sure that the insert and the insert cavity stay aligned.

CAUTION: IF THE INSERT DOES NOT GO INTO THE CONNECTOR SHELL EASILY, DO NOT CONTINUE TO PUSH THE INSERT. DAMAGE TO THE INSERT CAN OCCUR.

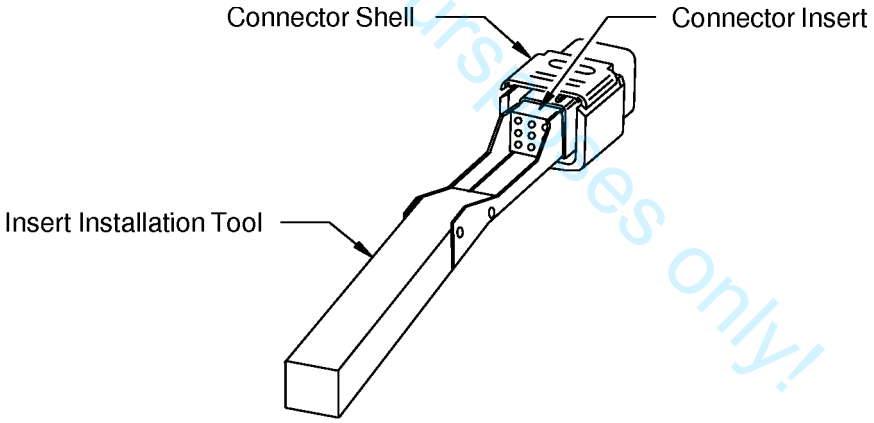

POSITION OF THE TOOL AND THE INSERT IN THE CONNECTOR SHELL
Figure 13

(5) If the insert does not go into the connector shell correctly:
(a) Remove the insert. Refer to Paragraph 4.C.
(b) Do Step (1) and Step (3) again.

D. Cable Preparation - Solder Sleeve Shield Termination

(1) Remove the necessary length of the cable jacket from the end of the cable.

For training purposes only!

BOEING PROPRIETARY - Copyright © Unpublished Work - See title page for details

Refer to:

- Figure 14
- Table 12 for the length
- Subject 20-00-15 for the procedure to remove the cable jacket.

Table 12
CABLE JACKET REMOVAL LENGTH

Backshell Part Number	Removal Length L (inch)	
	Target	Tolerance
787-8055-10M	2.4	+/-0.1
787-8055-20M	2.7	+/-0.1
787-8055-30M	3.0	+/-0.1

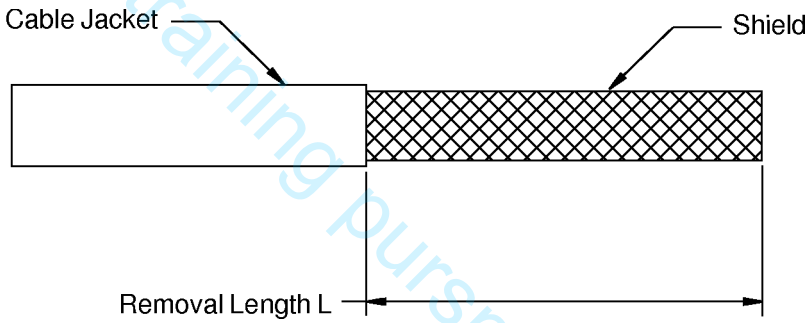

CABLE JACKET REMOVAL
Figure 14

(2) Assemble an uninsulated shield ground wire at the end of the cable jacket.
Refer to Subject 20-10-15 for the procedure to assemble the shield ground wire.
Make sure that the shield ground wire is pointed rearward away from the end of the cable.

E. Cable Preparation - Shield Pull Through Shield Termination

(1) Remove the necessary length of the cable jacket from the end of the cable.
Refer to:

- Figure 15
- Subject 20-00-15 for the procedure to remove the cable jacket.

For training purposes only!

BOEING PROPRIETARY - Copyright © Unpublished Work - See title page for details

ASSEMBLY OF BACC65BU, BACC65BV AND BACC65CA RECTANGULAR CONNECTORS

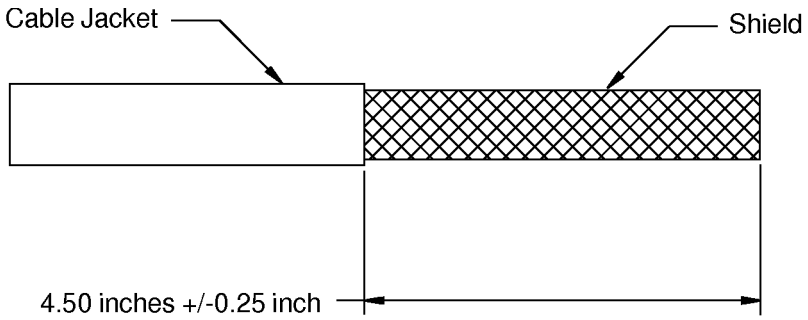

CABLE JACKET REMOVAL
Figure 15

(2) Assemble an uninsulated shield ground wire at the end of the cable jacket.
Refer to Subject 20-10-15 for the procedure to assemble the shield ground wire.
Make sure that the shield ground wire is pointed rearward away from the end of the cable.

F. Backshell Assembly with Shield Ground Wires

Table 13
NECESSARY MATERIALS

Component	Type	Specification
Tape	PTFE	A-A-59474
	Silicone, Type I	A-A-59163
	Silicone, Type II	A-A-59163

(1) Fold the shield ground wires back on the wire harness.
(2) With the flange near the connector, align the halves of the backshell.
(3) Put the halves of the backshell together on the wire harness.
Make sure that the backshell clip and the backshell slot are fully engaged.
NOTE: The backshell clip and the backshell slot are fully engaged when they make a click.
(4) Align the engaging end of the backshell and the rear end of the connector.
(5) For a 45 degree or a 90 degree backshell, put the backshell in the specified clock position. Refer to Figure 16.
Make sure that the coupling latch of the connector is on top.
NOTE: If the clock position is not specified, put the backshell at 6 o'clock.

For training purposes only!

BOEING PROPRIETARY - Copyright © Unpublished Work - See title page for details

ASSEMBLY OF BACC65BU, BACC65BV AND BACC65CA RECTANGULAR CONNECTORS

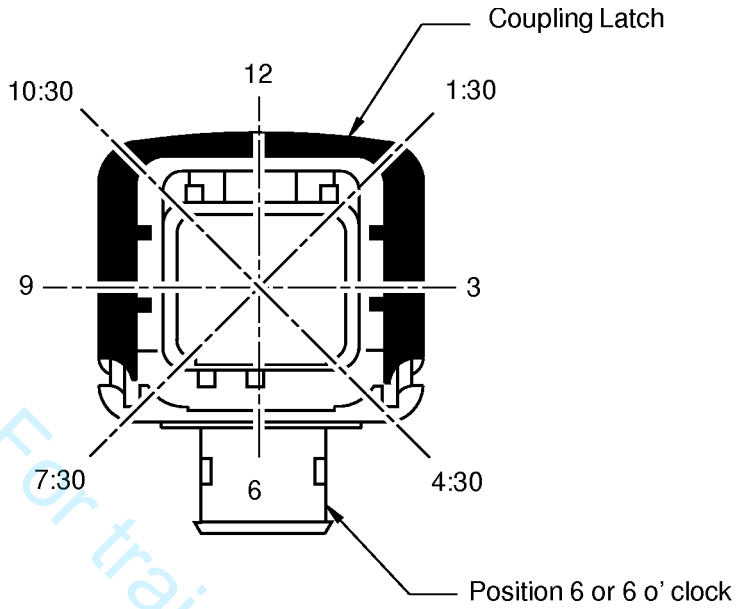

6 O'CLOCK POSITION OF THE BACKSHELL
Figure 16

(6) Align the halves of the backshell retainer and the backshell installation slot of the connector.

(7) Push the halves of the backshell retainer together until the retainer clip and the slot are fully engaged.

NOTE: The retainer clip and the retainer slot are fully engaged when they make a click.

Make sure that:

- The backshell halves are fully engaged
- The backshell retainer halves are fully engaged

(8) For the solder sleeve shield ground wires, fold each shield ground wire forward across the shield termination platform. Refer to Figure 17.

Make sure that:

- The distance between the rear edge of the solder sleeve and the fold of the shield ground wire is between 0.3 inch and 0.5 inch
- A shield ground wire does not make an overlap with a different shield ground wire on the shield termination platform.

For training purposes only!

BOEING PROPRIETARY - Copyright © Unpublished Work - See title page for details

ASSEMBLY OF BACC65BU, BACC65BV AND BACC65CA RECTANGULAR CONNECTORS

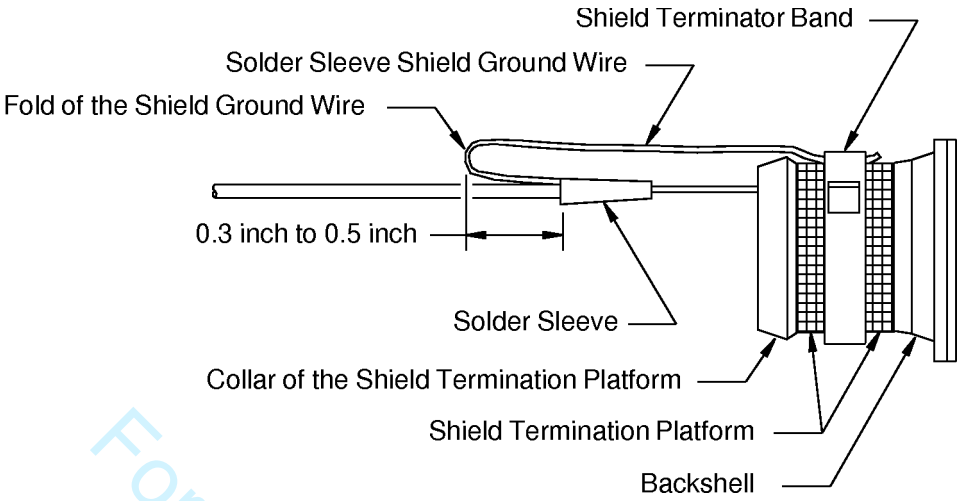

POSITION OF THE SHIELD TERMINATOR BAND - SOLDER SLEEVE SHIELD GROUND WIRE
Figure 17

(9) For the shield pull through ground wires:

(a) Lightly pull the end of each shield ground wire in the cable exit of the backshell.

(b) Fold the shield ground wire forward across the shield termination platform.

Make sure that:

- The distance between the end of the each cable jacket and the rear edge of the cable exit is between 0.3 inch and 0.5 inch
- A shield ground wire does not make an overlap with a different shield ground wire on the shield termination platform.

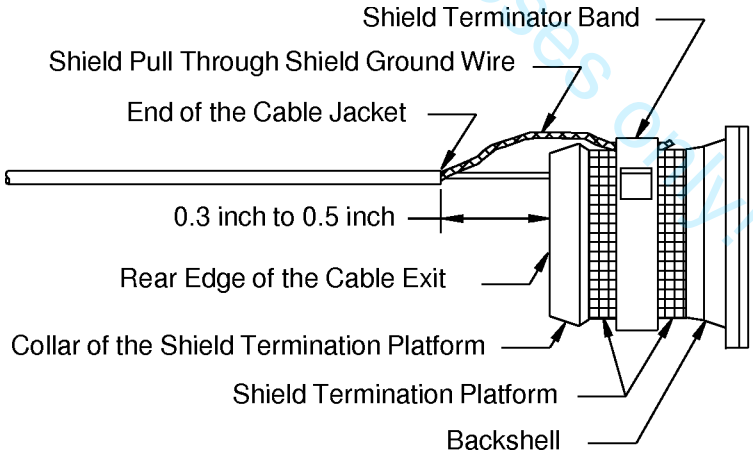

POSITION OF THE SHIELD TERMINATOR BAND - SHIELD PULL THROUGH SHIELD GROUND WIRE
Figure 18

(10) Install a shield terminator band on the shield ground wires on the shield termination platform.

BOEING PROPRIETARY - Copyright © Unpublished Work - See title page for details
For training purposes only

Refer to:

- Refer to Figure 17 for the location of the band
- Paragraph 5.H. for the procedure to install the band.

Make sure that:

- The buckle of the band is flat against the platform
- The buckle of the band does not make an overlap with the shield ground wires
- The buckle of the band does not make an overlap with the collar of the platform
- A shield ground wire does not overlap with a different shield ground wire on the platform.
- The shield ground wires are tight against the platform
- For each solder sleeve shield ground wire, the distance between the rear edge of the solder sleeve and the fold of the shield ground wire is between 0.3 inch and 0.5 inch
- For each shield pull through shield ground wire, the distance between the rear edge of the backshell cable exit and the end of each cable jacket is between 0.3 inch and 0.5 inch.

(11) Cut the end of each shield ground wire 0.10 inch ± 0.05 inch from the forward edge of the shield terminator band.

(12) Assemble a wire harness tie on the wire harness approximately 2 inches from the backshell.

Refer to Subject 20-10-11 for the procedure to assemble a wire harness tie.

(13) Put 1 to 2 layers of the PTFE tape on the shield terminator band. Refer to Table 13.

Make sure that:

- The center of the tape is aligned with the center of the band
- The edges of the tape are approximately aligned.

(14) Put 2 to 3 layers of the Type I silicone tape on the PTFE tape.

Make sure that:

- The center of the tape is aligned with the center of the band
- The edges of the tape are approximately aligned
- The termination slots cannot be seen.

(15) Put the necessary layers of the Type II silicone tape on the wire harness to make the diameter of the wire harness 0.5 inch minimum.

Make sure that each layer of tape:

- Starts at the rear edge of the backshell
- Extends 2.6 inches to 2.9 inches from the backshell
- Has a 50 percent overlap with the other layers
- Does not make an overlap with the backshell.

(16) Push the heat shrinkable sleeve forward until the forward end of the sleeve is aligned with the forward edge of the shield termination platform.

(17) Shrink the sleeve into its position.

Refer to Subject 20-10-14 for the procedure to shrink heat shrinkable sleeves.

Make sure that the forward end of the heat shrinkable sleeve is aligned with the forward edge of the shield termination platform.

For training purposes only!

BOEING PROPRIETARY - Copyright © Unpublished Work - See title page for details

ASSEMBLY OF BACC65BU, BACC65BV AND BACC65CA RECTANGULAR CONNECTORS

G. Backshell Assembly without Shield Ground Wires

Table 14
NECESSARY MATERIALS

Component	Type	Specification
Tape	PTFE	A-A-59474
	Silicone, Type I	A-A-59163
	Silicone, Type II	A-A-59163

(1) Put an approximately 2.6 inch length of specified heat shrinkable sleeve on the wire harness.

(2) With the flange toward the connector, align the halves of the backshell

(3) Put the halves of the backshell together on the wire harness

Make sure that the backshell clip and the backshell slot are fully engaged

NOTE: The backshell clip and the backshell slot are fully engaged when they make a click.

(4) Align the engaging end of the backshell and the rear end of the connector.

(5) For a 45 degree or a 90 degree backshell, put the backshell in the specified clock position. Refer to Refer to Figure 19.

Make sure that the coupling latch of the connector is on top.

NOTE: If the clock position is not specified, put the backshell in the 6 o'clock position.

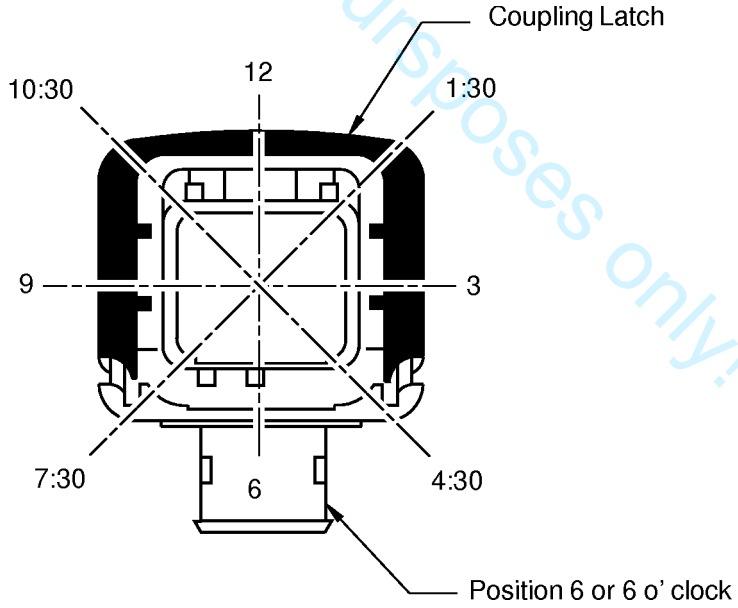

6 O'CLOCK POSITION OF THE BACKSHELL
Figure 19

(6) Align the halves of the backshell retainer and the backshell installation slot of the connector.

For training purposes only!

BOEING PROPRIETARY - Copyright © Unpublished Work - See title page for details

(7) Push the halves of the backshell retainer together until the retainer clip and retainer slot are fully engaged.

NOTE: The retainer clip and the retainer slot are fully engaged when they make a click.

(8) Install a shield terminator band on the shield termination platform.

Refer to:

- Refer to Figure 17 for the location of the band
- Paragraph 5.H. for the procedure to install the band.

Make sure that:

- The buckle of the band is flat against the platform
- The buckle of the band does not make an overlap with the collar of the shield termination platform.

(9) Assemble a wire harness tie on the wire harness approximately 2 inches from the backshell.

Refer to Subject 20-10-11 for the procedure to assemble a wire harness tie.

(10) Put 1 to 2 layers of the PTFE tape on the shield terminator band. Refer to Table 14.

Make sure that:

- The center of the tape is aligned with the center of the band
- The edges of the tape are approximately aligned.

(11) Put 2 to 3 layers of the Type I silicone tape on the PTFE tape.

Make sure that:

- The center of the tape is aligned with the center of the band
- The edges of the tape are approximately aligned
- The termination slots cannot be seen.

(12) Put the necessary layers of the Type II silicone tape on the wire harness to make the diameter of the wire harness 0.5 inch minimum.

Make sure that each layer of tape:

- Starts at the rear edge of the backshell
- Extends 2.6 inches to 2.9 inches from the backshell
- Has 50 percent overlap with the other layers
- Does not make an overlap with the backshell.

(13) Push the heat shrinkable sleeve forward until the forward end of the sleeve is aligned with the forward edge of the shield termination platform.

(14) Shrink the sleeve into its position.

Refer to Subject 20-10-14 for the procedure to shrink heat shrinkable sleeves.

H. Shield Terminator Band Installation

Refer to the procedures for the installation of the shield terminator band in Subject 20-25-14.

For training purposes only.

BOEING PROPRIETARY - Copyright © Unpublished Work - See title page for details

6. CONNECTOR INSTALLATION

A. Installation of the Receptacle Nut Ring

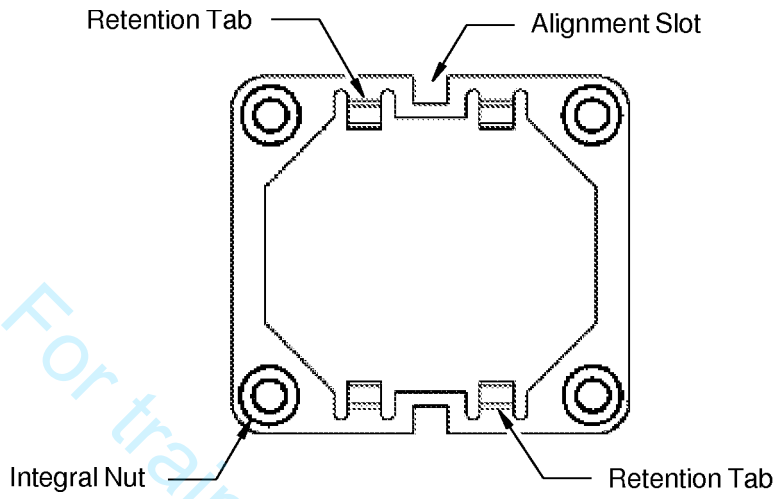

RECEPTACLE NUT RING
Figure 20

Refer to Figure 20:

(1) At the rear of the connector, align the slots of the nut ring and the tabs of the connector shell. Refer to Figure 21.

Make sure that the retention tabs and the integral nuts are pointed away from the rear of the connector shell.

For training purposes only!

BOEING PROPRIETARY - Copyright © Unpublished Work - See title page for details

ASSEMBLY OF BACC65BU, BACC65BV AND BACC65CA RECTANGULAR CONNECTORS

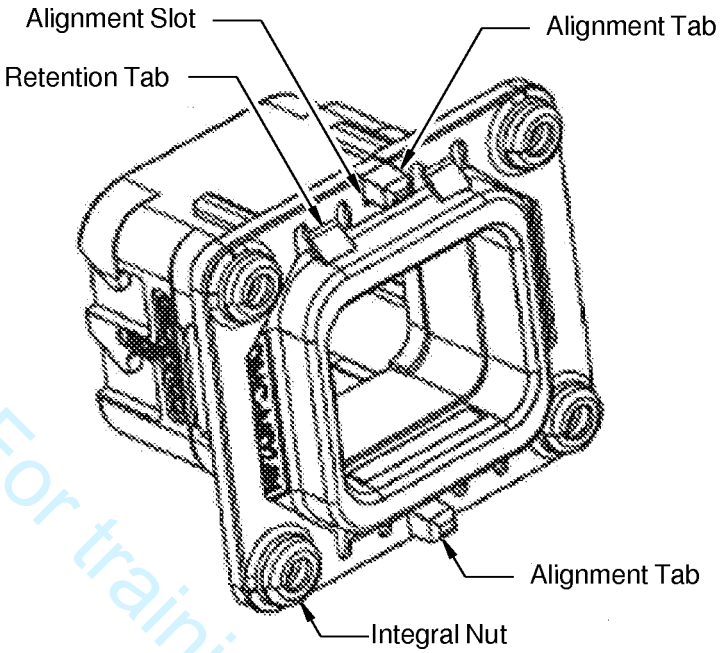

POSITION OF THE NUT RING ON THE CONNECTOR SHELL
Figure 21

(2) Push the nut ring forward until it is against the rear surface of the connector shell. Make sure that the retention tabs are engaged in the connector shell.

B. Installation of the Receptacle

Table 15
NECESSARY TOOLS

Tool	Part Number	Supplier
Nut Driver, Hex	3/16 inch	An available source
Screw Bit, Phillips	#1	An available source
Torque Tool	-	An available source

(1) Make a selection of these tools from Table 15:
- A hex nut driver
- A Phillips screw bit
- A torque tool.

NOTE: If the installation has a nut ring, the hex nut driver is not necessary.

(2) Align the installation holes of the receptacle and the holes in the structure.

(3) If the installation has a nut ring, from the engaging end of the connector, engage the threads of each installation screw and the applicable integral nut of the nut ring.

(4) If the installation does not have a nut ring:

(a) From the rear of the connector, put each installation screw through the holes in the receptacle and the structure.

BOEING PROPRIETARY - Copyright © Unpublished Work - See title page for details
For training purposes only.

(b) Install a nut on each installation screw.

(5) Tighten each screw in sequence until the flange of the receptacle is fully against the structure.

Make sure that the receptacle is flat against the structure.

(6) Torque each screw 6.0 inch-pounds ±0.5 inch-pound.

C. Plug and Receptacle Connection

(1) Align the engaging ends of the plug and the receptacle. Refer to Figure 22.

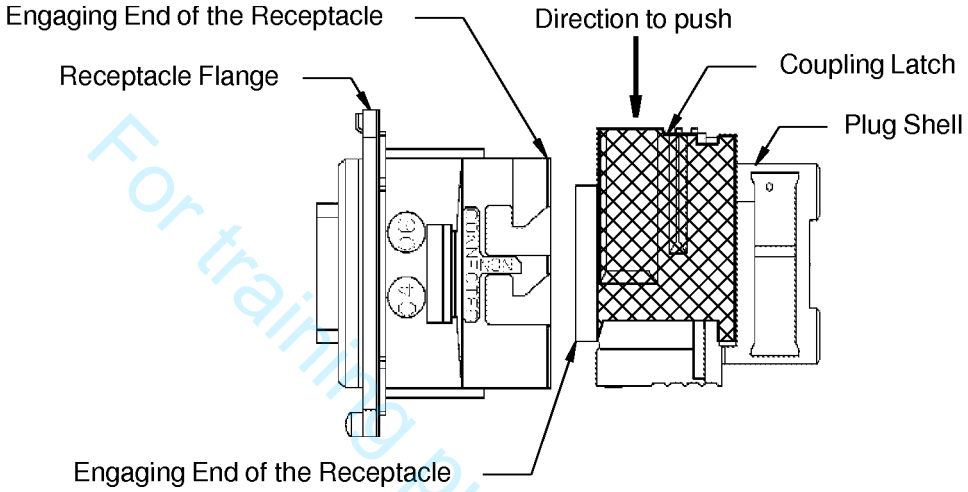

CONNECTION OF THE PLUG AND THE RECEPTACLE
Figure 22

(2) Push the coupling latch on the plug until it stops.

(3) Hold the coupling latch and, at the same time, push the engaging end of the plug into the receptacle until it stops.

Make sure that the plug and the receptacle stay aligned.

Refer to Figure 23.

For training purposes only!

BOEING PROPRIETARY - Copyright © Unpublished Work - See title page for details

ASSEMBLY OF BACC65BU, BACC65BV AND BACC65CA RECTANGULAR CONNECTORS

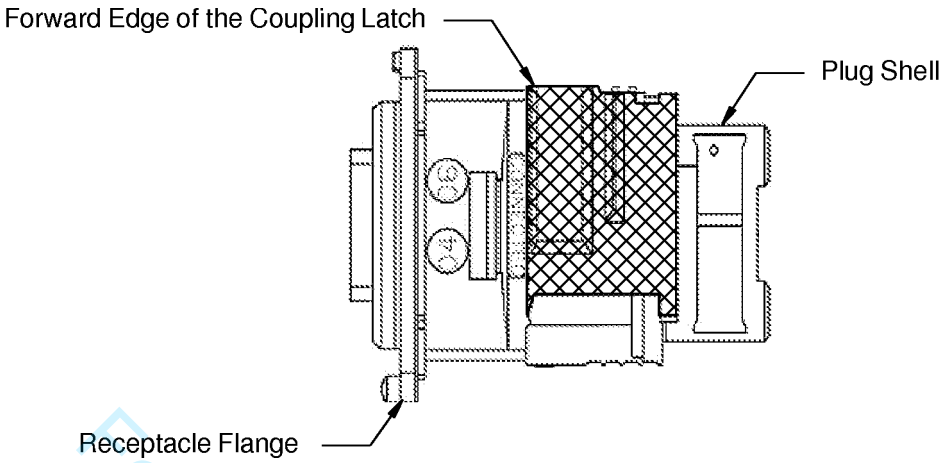

SATISFACTORY CONNECTION OF THE PLUG AND THE RECEPTACLE
Figure 23

(4) Release the coupling latch.

Make sure that:

- The plug and the receptacle are fully engaged
- The plug and the receptacle are locked together.

7. APPROVED TOOL SUPPLIERS

A. Special Tools

Table 16
SPECIAL TOOL SUPPLIERS

Tool	Supplier
00610100600	Amphenol
600-061	Glenair
A30199	Band-It Idex

For training purposes only!

BOEING PROPRIETARY - Copyright © Unpublished Work - See title page for details